MYE TECHNICAL MANUAL

P. R. MALLORY & CO., INC.

The

MYE TECHNICAL MANUAL

P. R. MALLORY & CO., Inc.
MALLORY

Published by

P. R. MALLORY & CO., INC.

Indianapolis, Indiana

OUR SINCERE APPRECIATION TO YOU!

★ *Thus do we acknowledge a special debt of gratitude for generous, spontaneous, willing help, and permission to use articles, charts, and other information without which it would have been impossible to make this MYE Technical Manual complete.*

Air-King Products Co., Inc.
Alliance Manufacturing Company
Automatic Radio Manufacturing Co., Inc.
Belmont Radio Corporation
Brush Development Co.
Bryan Davis Publishing Co.
Buick Motor Co.
Capehart Division of Farnsworth Television & Radio Corp.
Clough-Brengle Co.
Colonial Radio Corporation
Communications
Crosley Radio Corporation
Crowe Name Plate & Manufacturing Co.
Delco Appliance Division, General Motors Sales Corporation
Delco Radio Division, General Motors Corporation
Detrola Corporation
Electrical Research Laboratories, Inc.
Electronics
Emerson Radio & Phonograph Corporation
Fada Radio and Phonograph Corporation
Fairbanks, Morse & Co.
Farnsworth Radio & Television Co.
Ford Motor Co.
Galvin Manufacturing Corporation
General Electric Co.
General Household Utilities Company
General Radio Co.
Gilfillan Bros., Inc.
Herbert Horn Radio Co.
Hickok Electrical Instrument Co.
Howard Radio Company
Hudson Motor Car Co.
Jensen Radio Manufacturing Co., Inc.
Ken-Rad Tube & Lamp Corporation
Magnavox Co., Inc.
McGraw-Hill Book Co., Inc.
Meissner Mfg. Co., Inc.
Midwest Radio Corp.
Mission Bell Radio Mfg. Co., Inc.
Noblitt-Sparks Industries, Incorporated
Pacific Radio Corporation
Pacific Radio Exchange, Inc.
Packard Bell Radio Company
Packard Motor Car Co.
Peter Pan Radio Corp.
Philco Radio & Television Corp.
Radio Products Corporation
Radiotron Division of R C A Mfg. Co.
Raytheon Production Corp.
R C A Manufacturing Company, Inc.
Radio Engineering Handbook, by Keith Henney (Copyright McGraw-Hill Book Co., Inc.)
Radio Manufacturers Association
Sears-Roebuck & Co.
The Sparks-Withington Company
Stewart-Warner Corporation
Stromberg-Carlson Telephone Manufacturing Company
Sylvania Electric Products, Inc.
Trav-ler Radio & Television Corporation
Triplett Electric Instrument Co.
Troy Radio & Television Co.
United American Bosch Corporation
Utah Radio Products Company
Warwick Manufacturing Co.
Webster Company
Wells-Gardner & Co.
Wilcox-Gay Corporation
Zenith Radio Corporation

For years it has been the Mallory-Yaxley pledge to retain leadership in furnishing constructive, helpful information and assistance to the radio service and engineering professions—and to make that information worthy of its confidence. In this, the MYE Technical Manual, there is ample evidence of the continuance of this pledge.

In dedicating the MYE Technical Manual to the radio and electronic industries, we are also dedicating it to those who have made it possible.

You are always welcome at the Mallory factory, where you may review and witness the continued research and development work—an activity which warrants your 100% confidence.

Reproduction or use, without express permission, of editorial or pictorial content, in any manner, is prohibited.

No patent liability is assumed with respect to the use of the information contained herein.

Copyright 1942 by P. R. Mallory & Co., Inc., Indianapolis, Indiana, U. S. A.

Copyright under International Copyright Union

All rights reserved under Inter-American Copyright Union (1910), by P. R. Mallory & Co., Inc.

Second Printing

PRINTED IN U. S. A.

. . . Up to This Time

NOT LONG AGO one of our friends—evidently a newcomer in the radio service field—wrote us for some help. "I knew you made parts, both original and replacement," he said, "but how long have you been issuing technical literature?"

When? It started a chain of memories that ran back eight years when vibrators were new and mysterious; and service men needed information and help to make repairs. Like every subsequent publication, the Manual we issued then had a definite purpose . . . filled a definite need of the industry.

That same year, 1934, saw another help produced in answer to your insistent calls for aid. The publication of a complete manual on replacement volume controls had been attempted but never before accomplished. It became a reality with the issuance of the Yaxley Replacement Volume Control Manual.

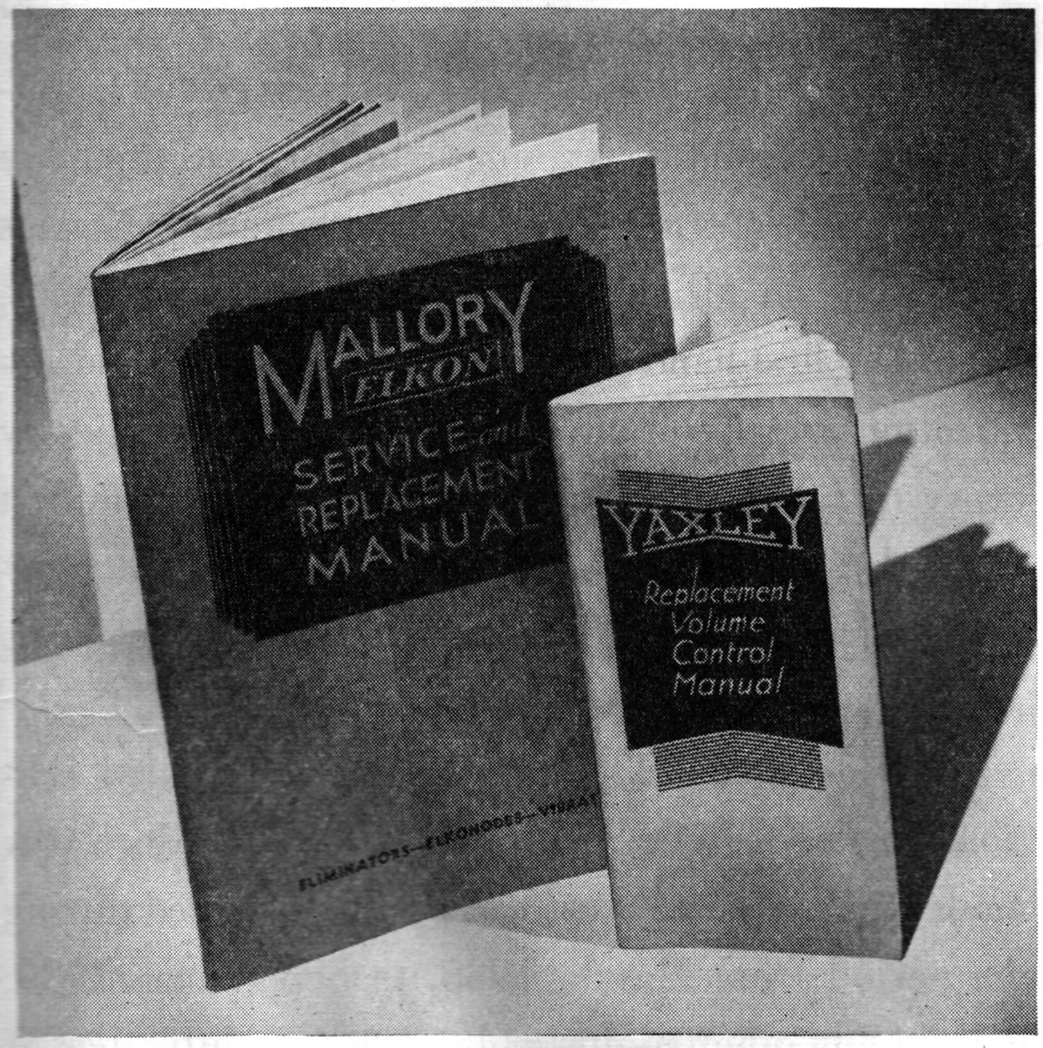

In 1935, we had not fully made up our minds whether to issue further publications . . . but you decided for us. Automobile radio was gaining ground with seven league boots, and you needed all the information you could get to keep apace. So we brought out the first complete Auto Radio Manual with quarterly supplements to keep it up-to-date. The demand for this book was terrific. Many of you still treasure it, even though it has been supplanted by more complete and up-to-date guides.

That same year we gave you a greatly improved and more complete Volume Control Manual—concise, accurate and practical. It was widely imitated but never quite equaled. More important to you, we announced thirty new replacement volume controls that would service 98% of the 3,200 set models then in existence. Only four of the new controls would service 1938 models. It was the first move towards standardization of replacement controls.

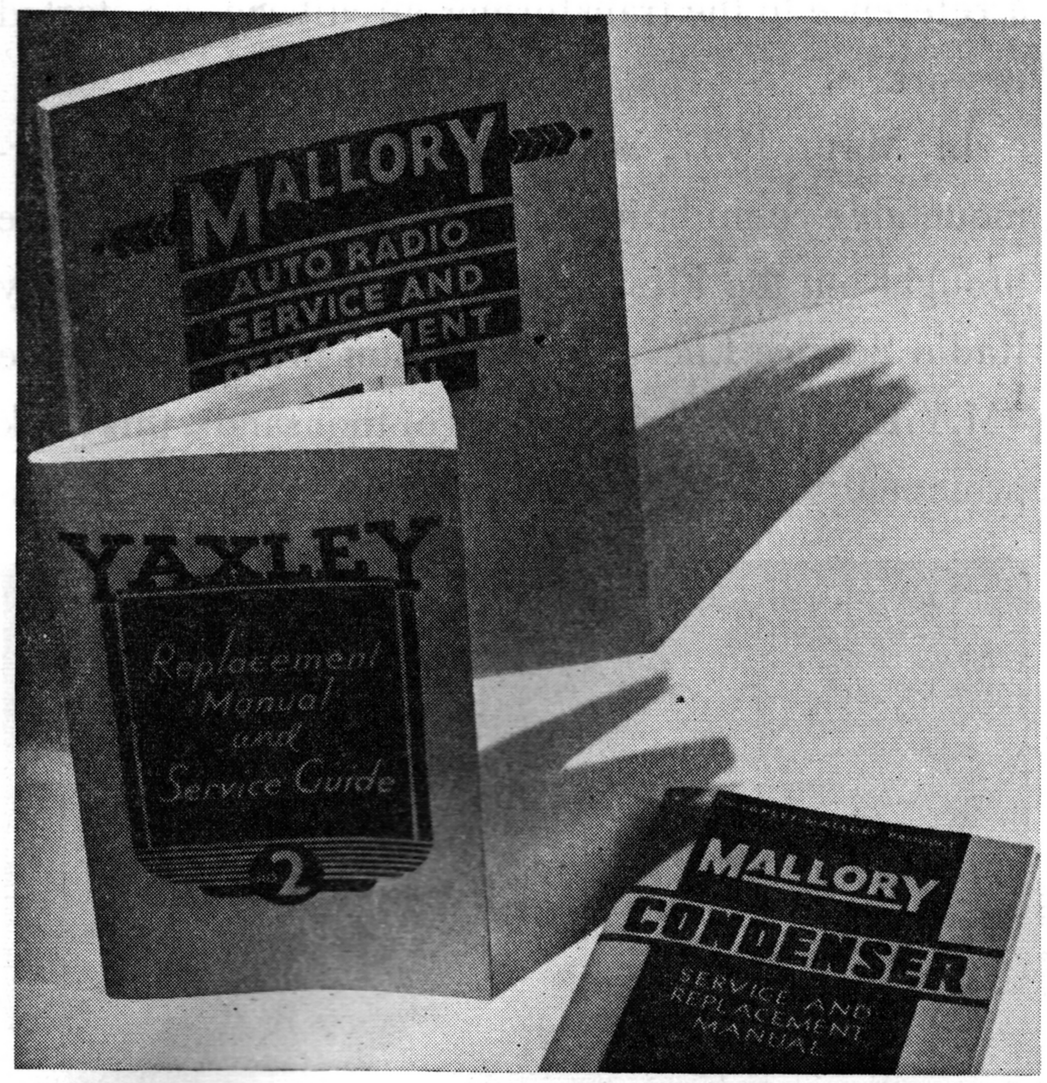

You have told us again and again that the time and money it has saved you is incalculable.

In 1936, we introduced standardization of condensers with the announcement of 69 units for servicing 100% of all radio sets using dry electrolytics. Over and above the many constructional features for

universal replacement was an extra feature—the new Mallory Condenser Service and Replacement Manual, which gave in detail the universal application of these condensers in everyday service work. To guide our planning, we had solicited your aid through personal calls and extensive questionnaires. From a detailed analysis of your problems, we made possible the first practical system of condenser servicing.

But, in spite of the progress you had helped us make, we were still dissatisfied. Too many of you complained of the growing number of "guides," the endless job of looking through dozens of books to get the "dope" you needed. A bright idea suddenly struck us. Why not lump all of our separate manuals into one complete book—a book where you could find on one page and on one line all the information you needed for replacing controls, condensers and vibrators? We could also put in the I.F. peaks of all makes and models, the complete tube complement, perhaps a reference to the transformer circuit. So, we started to work.

In May, 1937, after months of almost insurmountable compilation and production problems, we brought out the First Edition of the Mallory-Yaxley Radio Service Encyclopedia. (You nicknamed it the "M.Y.E.") Used daily by tens of thousands, this book prompted your world wide testimony as to its indispensable value. Many enthusiastic letters not only bear witness to this fact, but also guided us in making important changes in subsequent editions; changes that made their predecessors obsolete.

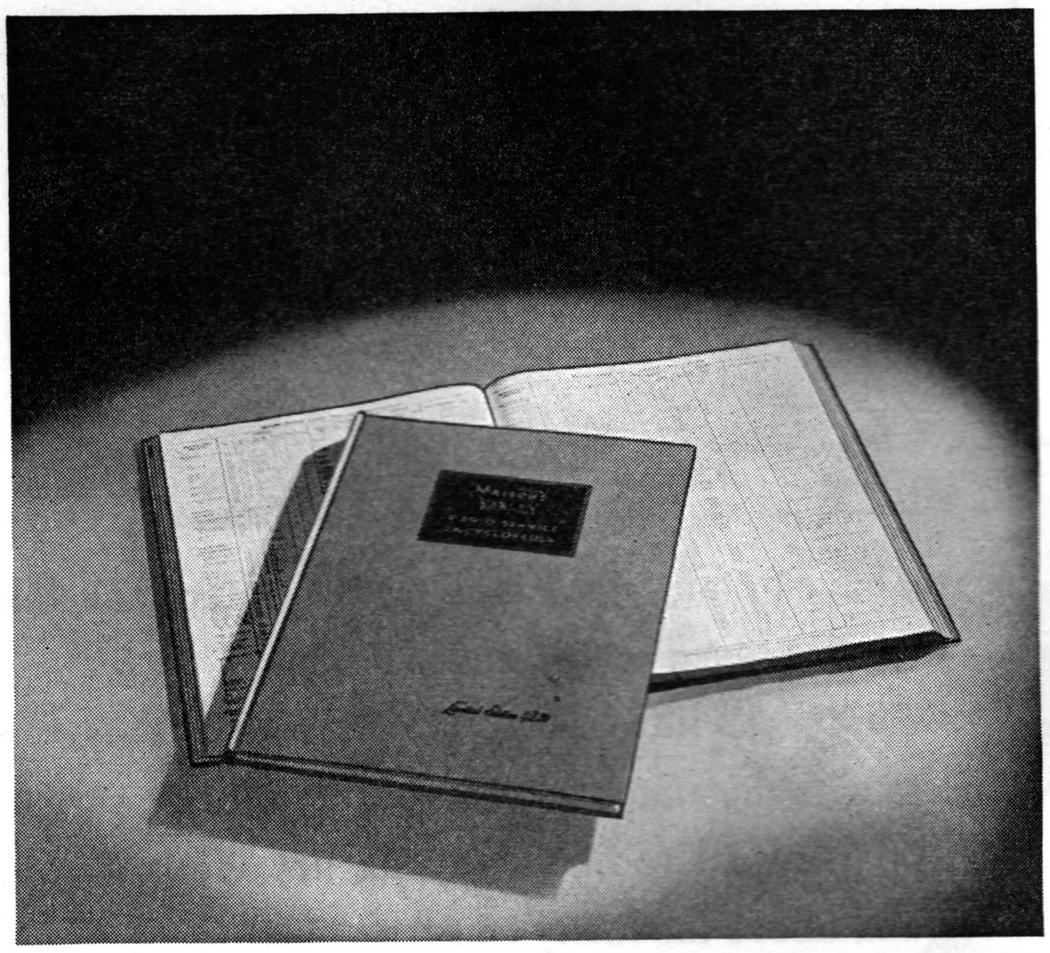

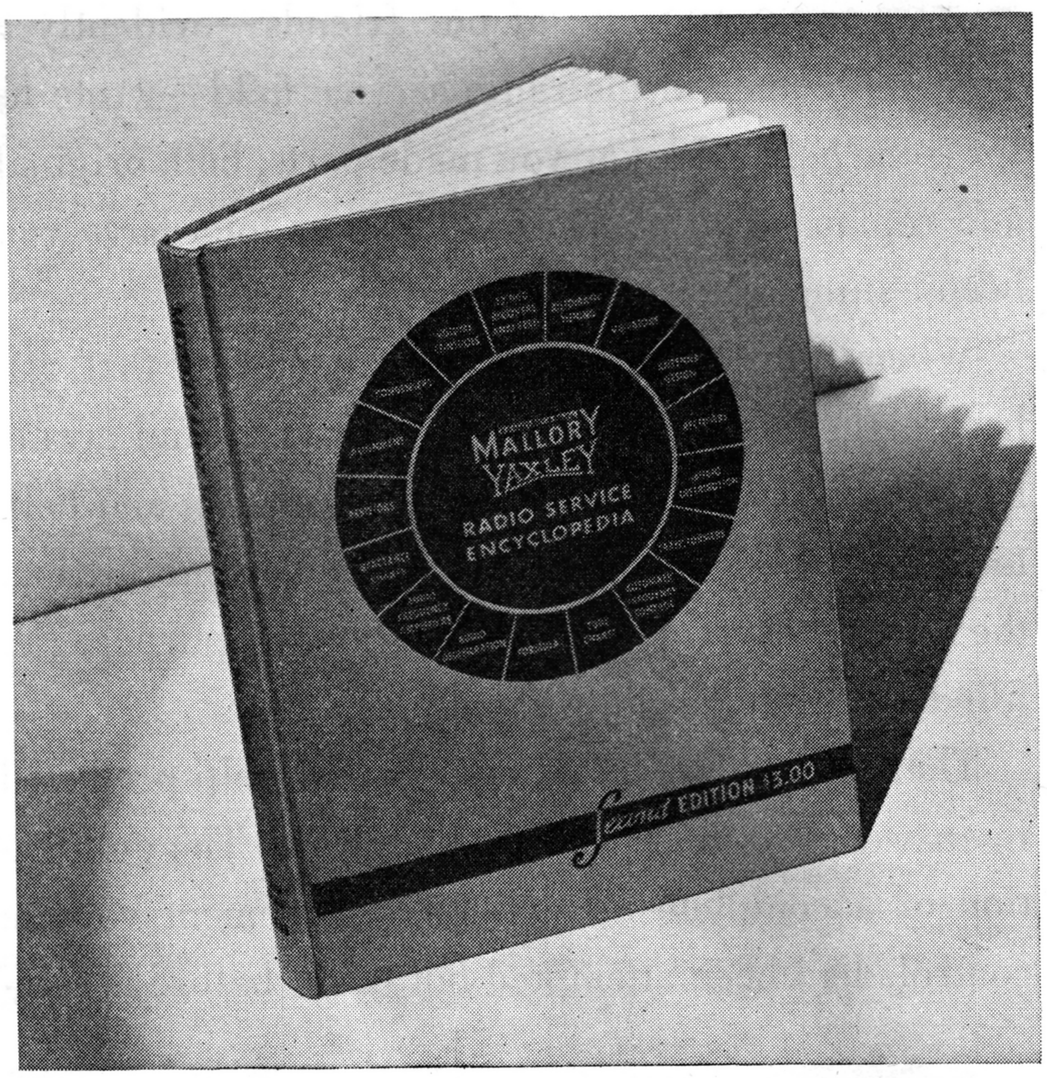

The Second Edition "M.Y.E." followed the first—fifteen months later. Automatic tuning, with its maze of complications to plague the service engineer, was appearing on all new sets with infinite variations. From our first-hand experience in the design and application of push-button switches with practically every major set manufacturer, we gave you the first clear, detailed analysis of all the systems—with suggested servicing procedures. It was the hit of the year. Again, you were profuse in your thanks.

In September, 1939, we presented the Third Edition, free of former "frills." It had to be. More new models of radio receivers had been announced during the period from March, 1938, to September, 1939, than in any other comparable period. The listings of makes and models alone required more than twice the number of pages that had been devoted to them in the first edition. It became obvious that it would be an impossibility to have both listings and general technical information in a single volume. The book would become too big, too bulky and too expensive. We had

no choice but to omit the technical articles. However, the listings were made even more valuable by the addition of a number of new features, including a reference by volume and page number to Rider's Manuals,

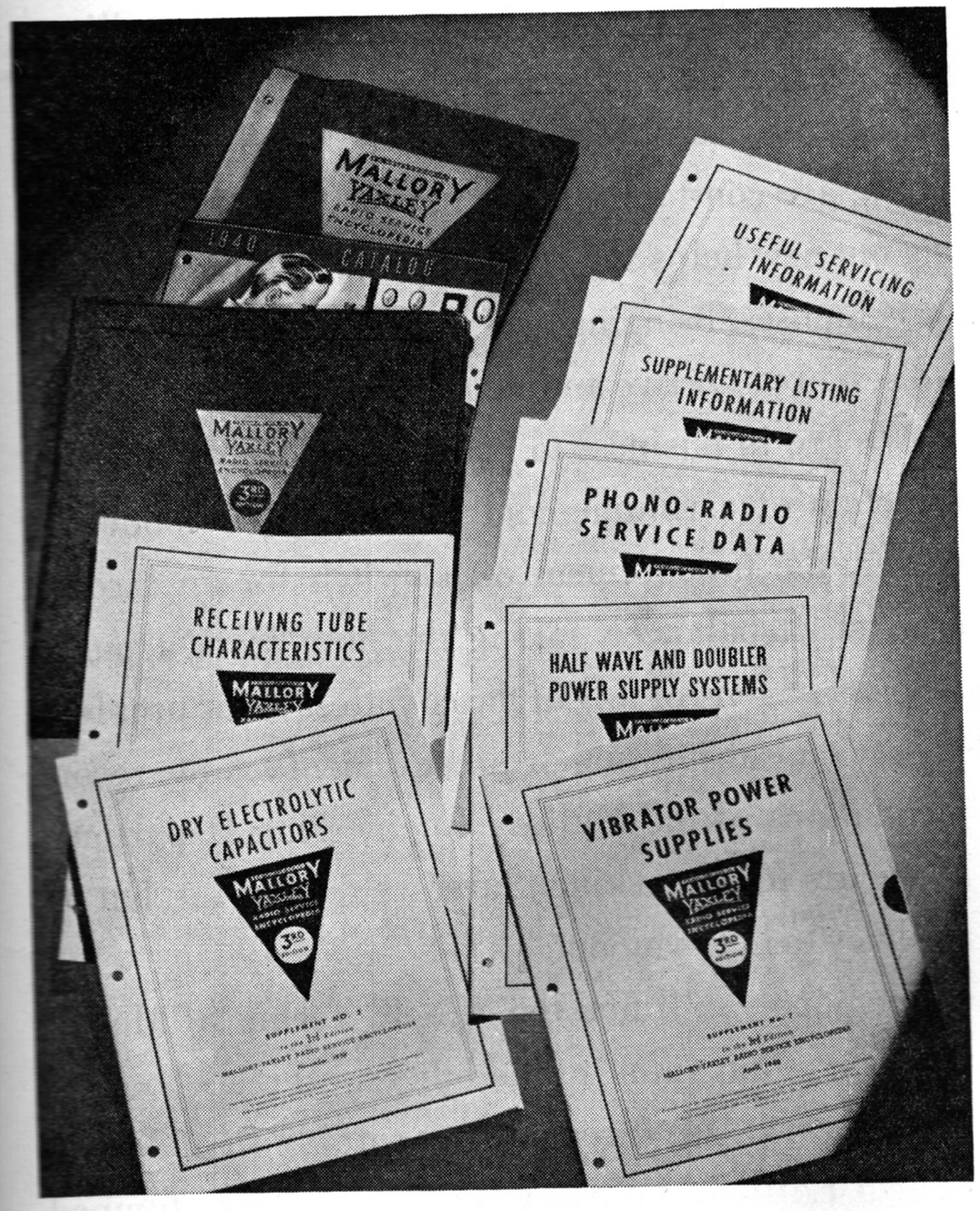

and more complete information on tube complements. You were grateful, and told us so.

New and vital developments in radio continued at a dizzy pace. Shifts in frequency assignments for stations in the broadcast band necessitated your help in the re-setting of automatic tuning receivers. Frequency modulation was coming in. Television, with totally new complexities for the service man, was on the threshold. Anticipating your troubles, we hastened the first issue of the Supplemental M.Y.E. Monthly Technical Service . . . a service designed to give you timely data in an unbiased, accurate and easy-to-understand manner. As succeeding issues reached you month after month, you hailed the supplements as the one convenient, economical source of technical information. You told us that they kept you abreast of every current development, that one issue was worth the price of the whole series.

Almost a year had elapsed from the time that the twelfth, and final Supplement was mailed to you before we issued our next publication . . . the 4th Edition M.Y.E. During that year you showered us with questions. The Engineering Application Section of our Wholesale Division worked overtime to get you the right answers—fast. Replacements were becoming more complicated. Controls, particularly, were the big headache. The variety of shafts and bushings were enough to drive you "nuts." We purposely held up the publication of the Fourth Edition M.Y.E. so that we could give you thorough and painstaking replacement recommendations . . . and also the maximum universal replacement from the fewest number of individual parts.

Although we started early in 1940, the further we got into the job of gathering samples of original parts, circuit information and other data that would enable us to set up accurate recommendations, the more evident it became that we could not hope to publish the M.Y.E. in 1940. It was September of 1941 before we could get the Fourth Edition in your hands . . . but it was more valuable to you because of the delay.

There were twice as many pages of set and model listings as in the Third Edition . . . almost 400. We had to change the shape of the book, too, in order to

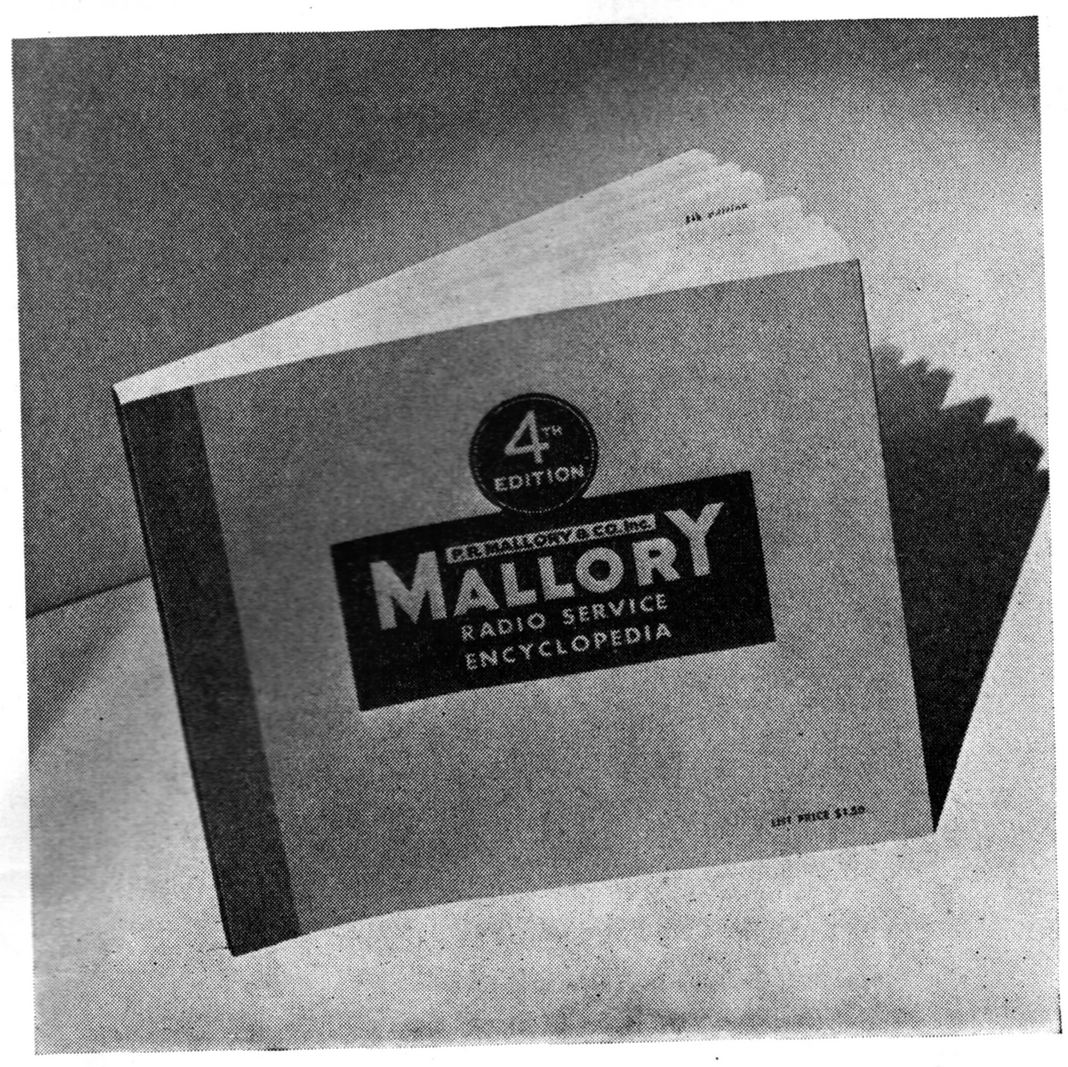

accommodate original part numbers on all products. But this new feature saved you even more time and trouble in finding the correct replacement.

When we issued the Fourth Edition M.Y.E. last fall, we did not announce a Second Supplemental Technical Service. There were too many uncertainties ahead. We were in the midst of mounting defense activities. The future of the entire radio industry was unpredictable and we hesitated to commit ourselves on a monthly service that we might have to suspend. We sounded out a great number of you by personal letter on the idea of bringing the former supplements thoroughly up-to-the-minute, adding timely new ones, and binding the whole works in hard cloth covers. Your answers were so overwhelmingly affirmative that we started immediately on the all-important revisions and new texts.

Equally important as the enthusiastic "go-ahead" signal were the many fine suggestions on the material and subject matter for the new book. These suggestions were all given the most careful consideration, and wherever possible they have been incorporated to make the M.Y.E. Technical Manual *your* book. In presenting the M.Y.E. Technical Manual, we renew again the responsibility we accepted eight years ago—to provide you with factual, usable, reliable data that would make your job easier and more profitable.

It is a war-time book in every sense. Begun in the heat of the all-out defense effort, its progress continued apace despite serious curtailments in our full-time technical staff as a result of drafts and enlistments. As further proof of its timeliness, approximately 2,000 copies are being distributed to military radio instructors. Once you look through the book, you'll understand why.

We are constantly studying your problems, working out new helps for you to meet the restrictions that war imposes, bringing new ideas to you to make your work more effective and more profitable.

We are in business to help *you*. Whether it be the selection of a volume control for a 1928 model receiver, the procurement of a switch for an aircraft crankshaft balancer, taking the hum from a public address system, or any of the countless other problems in service, substitution or procurement . . . the recommendations of the Mallory Engineering Department are yours for the asking. Sure, we're busy . . . but not *too* busy to help you out.

We hope you'll find the M.Y.E. Technical Manual a worthy companion to the other well-read books in your library. Use it regularly—refer to it, and to the Fourth Edition M.Y.E., whenever you are stumped. If the answers aren't there, then write to our Engineering Application Section, Wholesale Division.

Remember, "Come hell or high water," we're here to help you.

P. R. MALLORY & CO., INC.

• *Section* 1

THE MYE TECHNICAL MANUAL

Loud Speaker Design and Application

P.R. MALLORY & CO. Inc.
MALLORY

LOUDSPEAKER DESIGN AND APPLICATION

In spite of the fact that the most important part of a radio receiver, P. A. system, electric phonograph, and similar sound reproducing systems is its loud speaker, there has been a dearth of practical technical information on this device. We have long felt that a simple, straight forward, factual exposition of loud speakers would be of real value to the service engineer.

It was with this thought in mind that we asked the Jensen Radio Manufacturing Company, Chicago, Illinois, for technical data suitable for preparation of a text on this subject. They generously responded by furnishing this complete treatise, which we believe to be a real contribution to the technical literature of radio. We believe you will find this chapter to be both interesting and valuable.

I. General Definitions, Physical Characteristics

A loud speaker is a device for converting audio-frequency electrical power into acoustical power and radiating it into a specific region.

The most common type of loud speaker is the moving coil or "electrodynamic" type. This type of loud speaker consists essentially of a radiator or diaphragm to which is rigidly attached a coil, which in turn is immersed in a steady magnetic field. This diaphragm and coil assembly is suspended by flexible supports allowing vibration parallel to the axis of the coil. These vibrations are the result of passing the audio-frequency electric current through the coil. Figures 1 and 2 illustrate this type of loud speaker.

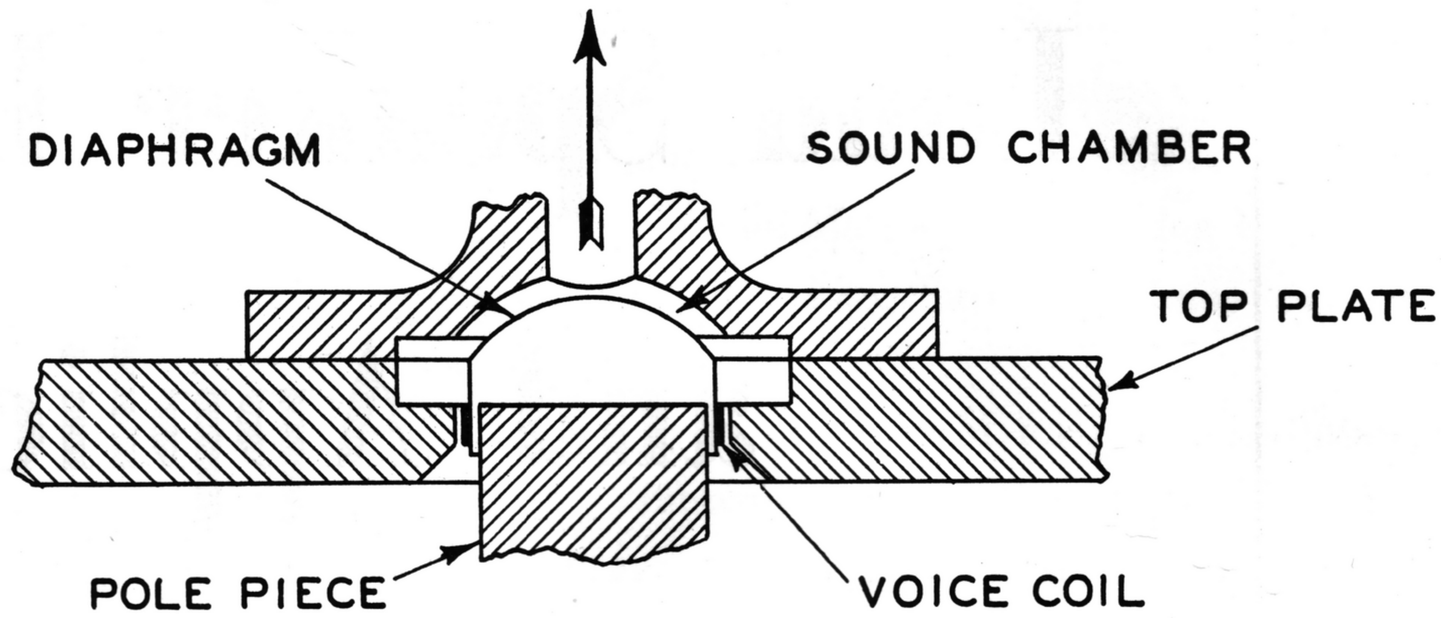

Fig. 2a

Figures 1a, 1b, and 1c illustrate the "direct-radiator" type. That is, the loud speaker is designed in such a way that when used in conjunction with a suitable "baffle" the diaphragm radiates directly into the surrounding air. In contrast, Figure 2 illustrates the class in which the diaphragm is coupled by means of a "sound chamber" to a "horn" which in turn radiates into the air. This latter class of loud speakers will be discussed in a later section.

Figure 1a illustrates a speaker in which the magnetic field is supplied by means of an electromagnet or field coil, whereas Figures 1b and 1c illustrate those in which a permanent magnet fulfills this duty.

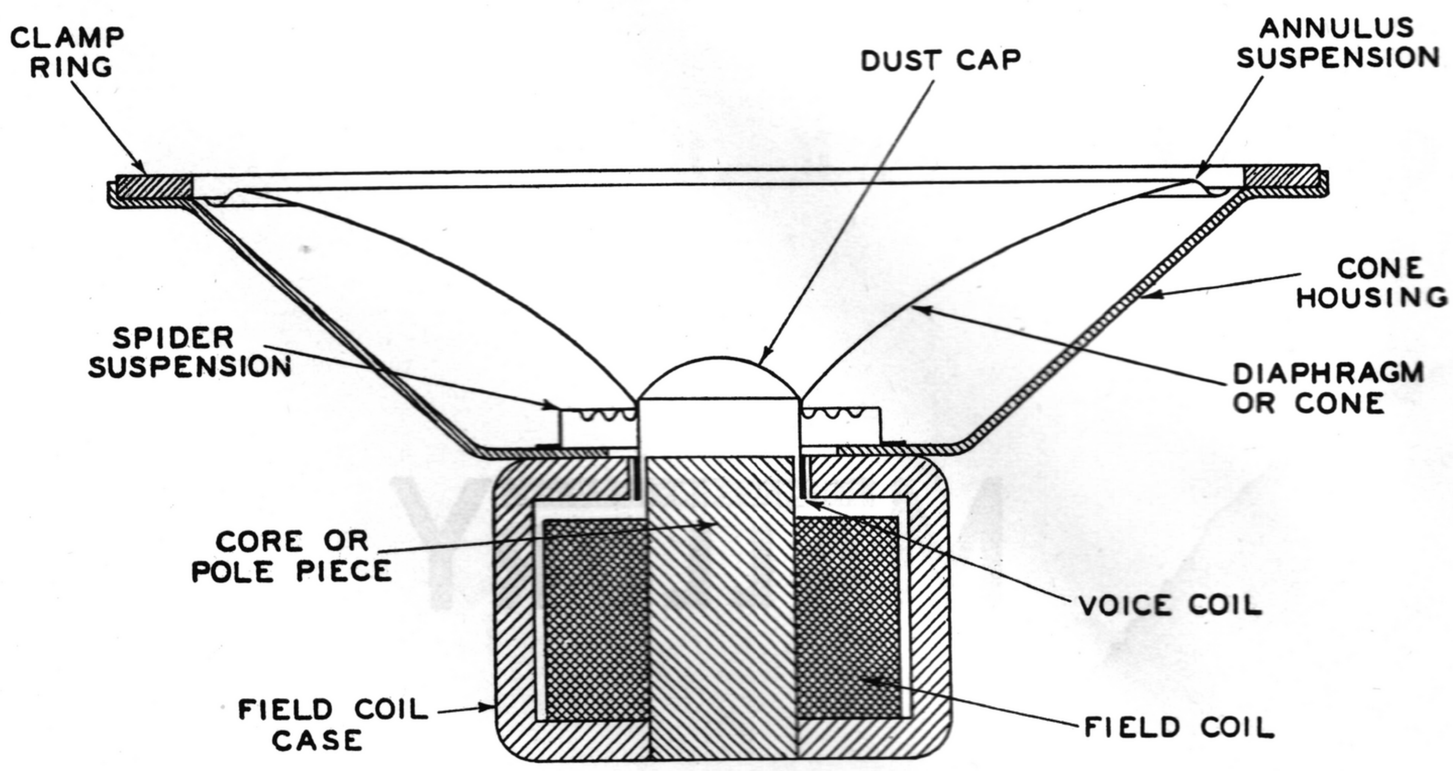

Fig. 1a

II. The Magnetic Circuit; Field Coils and Permanent Magnets

The operation of the loud speaker does *not* depend upon how the magnetic field is supplied, providing this

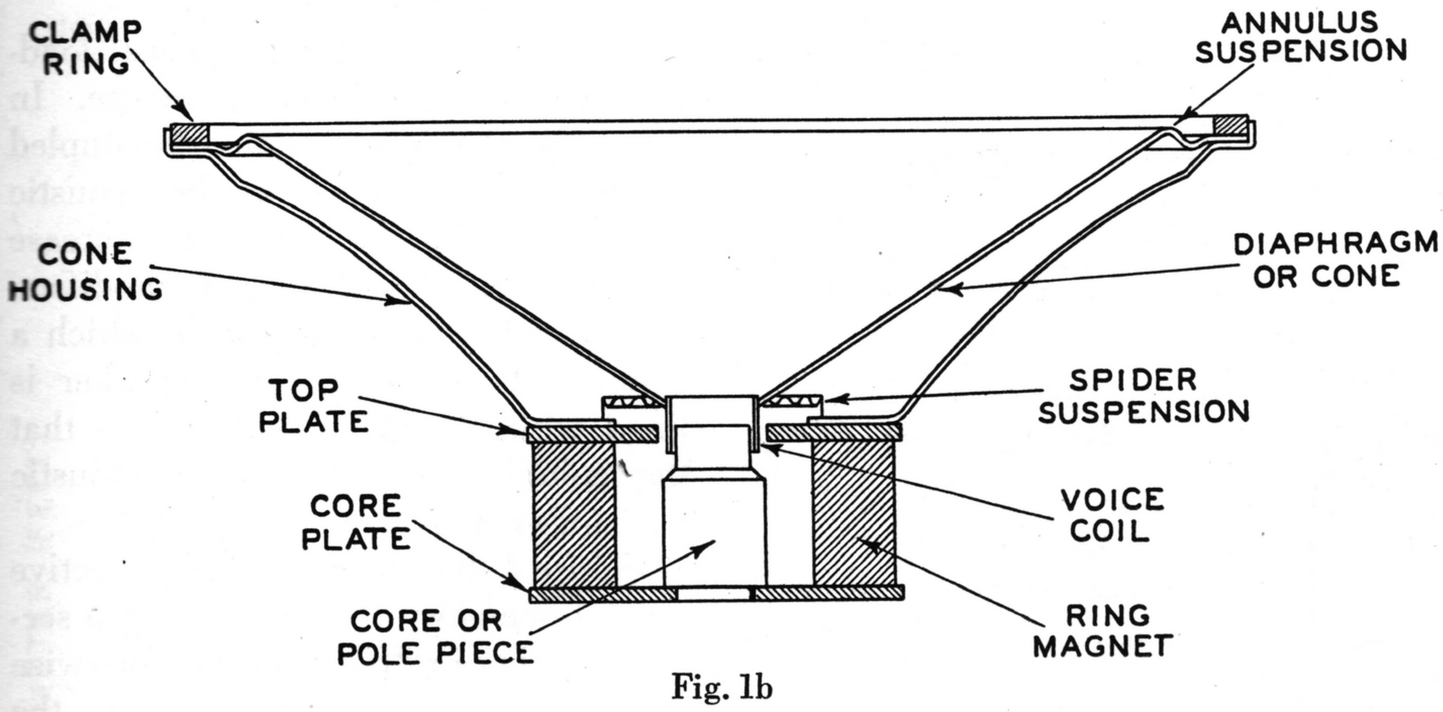

Fig. 1b

field has the required strength. This latter point should be especially noted since all further explanation concerning the action of the moving parts will be general, that is, the required magnetic field strength is assumed.

Permanent magnet loud speakers are generally available having magnetic field strengths identical to equivalent models using field coils. This equality is a result of relatively recent developments in magnetic alloys. No appreciable deterioration has been noted in original samples of magnets made from these alloys several years ago. Thus misapprehensions with regard to the efficiency and stability of permanent magnet structures need no longer exist.

For a given magnetic structure the field strength depends on the magnet weight. However as the magnet weight varies, the air gap (the region in which the voice coil is situated) should be altered to give best results. A figure of merit including all these factors is a good measure of the effectiveness of the unit; one such measure is the magnetic energy in the gap stated in millions of ergs. Typical values are 0.19 for a small inexpensive 5-inch permanent magnet speaker, 1.36 for a good quality 10-inch speaker and 7.5 for a high quality 12-inch speaker.

For an electromagnet magnetic structure the field strength depends on the power dissipated in the coil. The manufacturer specifies the normal power to be dissipated in the field coil. Table 1 shows the field current or voltage required to dissipate a given power in a field coil of given resistance. As a rough guide, field-coil power dissipation should be approximately equal to the maximum audio-frequency power-handling capacity of the device.

In choosing a loud speaker for a given application, the decision as to permanent magnet or field coil magnetic structures depends on several factors (see section 9). Cost is in many cases a vital factor. Very small permanent magnet loud speakers cost from the same to about 10% more than equivalent field-coil units. Larger permanent magnet speakers used for public address and large radio receivers cost approximately 50% more than field coil equivalents, while for very large magnetic structures, such as used in large public address installations, theatre work, etc., the permanent magnet speaker may cost more than twice as much as the field coil unit.

TABLE 1
Field Coil Excitation

Power (watts)	Resistance (ohms)	Field Voltage	Field Current (ma)
3	500	38.8	77.5
3	1000	54.8	54.7
3	1500	67.2	44.7
3	1800	73.6	40.8
3	2500	86.6	34.6
4	500	44.8	89.3
4	1000	63.3	63.1
4	1500	77.5	51.6
4	1800	85.0	47.0
4	2500	100	40
6	500	54.8	110
6	1000	77.5	77.5
6	1500	95	63.1
6	1800	103	58.2
6	2500	122	49.1
8	500	63.3	126
8	1000	89.5	89.4
8	1500	110	72.7
8	1800	120	66.6
8	2500	141	56.7
10	500	70.8	141
10	1000	100	100
10	1500	122	82
10	1800	134	74.6
10	2500	158	63.3
14	500	83.8	167
14	1000	118	119
14	1500	145	96.5
14	1800	159	81.7
14	2500	187	74.8
26	500	114	228
26	1000	161	162
26	1500	198	131
26	1800	216	120
26	2500	255	102

III. Baffles, Cabinets and Acoustic Loading Networks

Loud speakers of the direct-radiator type are invariably mounted on some form of auxiliary structure. This may take the form of a cabinet (radio console), a flat plane surface with an opening through which the speaker radiates (flat baffle), or some more complex system of acoustic loading. All of these

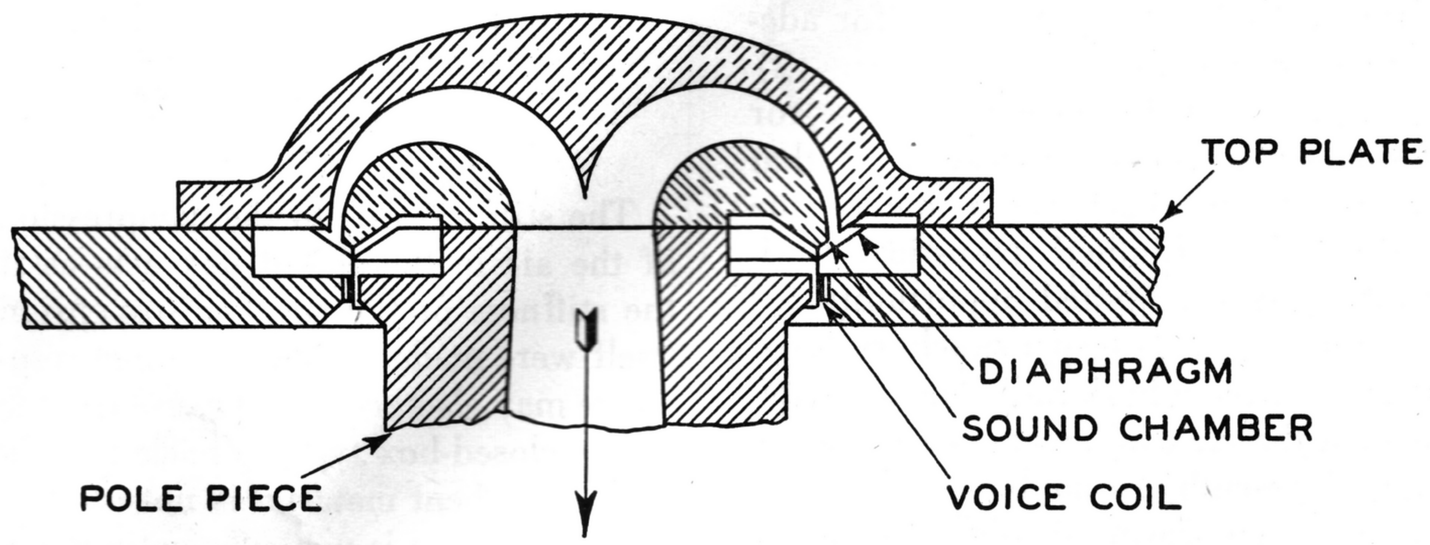

LOUD SPEAKER HORN UNIT WITH ANNULAR DIAPHRAGM

Fig. 2b

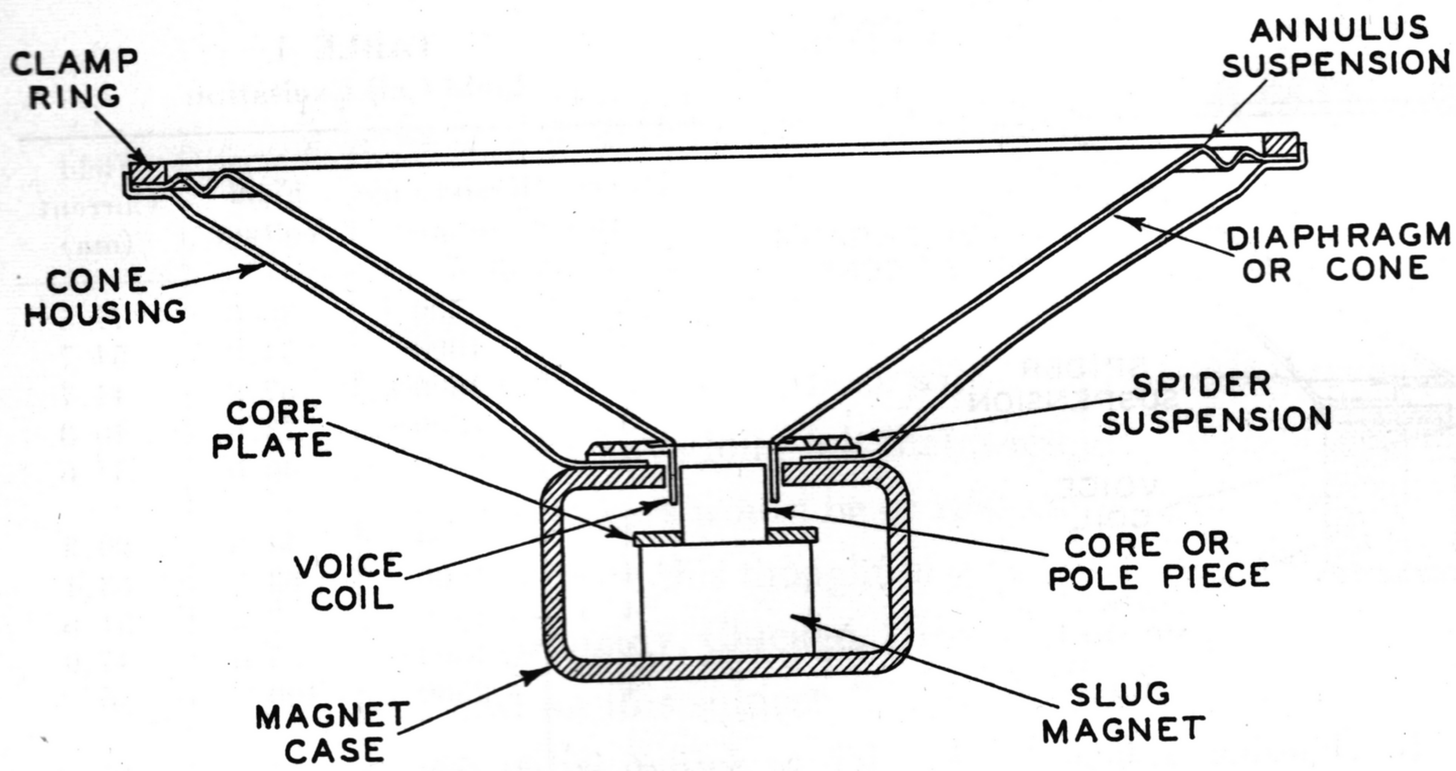

Fig. 1c

devices may be classed in general as "baffles." Their primary function is to acoustically "load" the loud speaker to allow it to radiate more efficiently. This improved efficiency usually occurs in the low frequency range. It is important to remember that the more "adequate" the "baffle" the more improved will be the low-frequency response. It should be emphasized at this point that a loud speaker cannot be considered as an isolated element because: (1) Any baffle is definitely a part of the acoustical system; (2) The loud speaker may radiate into a closed room which has its own acoustic resonance characteristics reflected into the loud speaker; (3) The accompanying audio-frequency electrical circuits are definitely a part of the composite system and must be considered when we discuss the operation of a loud speaker system.

The simplest type of baffle is a large, flat surface with an opening through which the speaker radiates. However, the simple flat baffle has the following disadvantages: (1) Large size for adequate low-frequency response; (2) Very poor low-frequency response for large angles from the speaker axis (that is, as we approach the plane of the baffle); (3) Limited acoustical flexibility (that is, limited opportunity for modification of response characteristics). The open-back radio console cabinet has the same inherent disadvantages, since it resembles a flat baffle. However, here a new form of difficulty arises known as "cabinet resonance." Cabinet resonance actually modifies the response characteristics of the system due to a standing wave pattern in the cabinet. This results in emphasis of the 150 to 250 cycle response.

The closed box is an improvement in that it eliminates the back-side radiation *as such*. In other words, if the cabinet is rigid, all the sound at the rear of the cabinet is due entirely to radiation from the front of the cone. There is, of course, practically uniform radiation in *all* directions at *low* frequencies. See Figure 3. The back-side radiation from the cone may be absorbed by a heavy absorbent lining on the interior of the box.

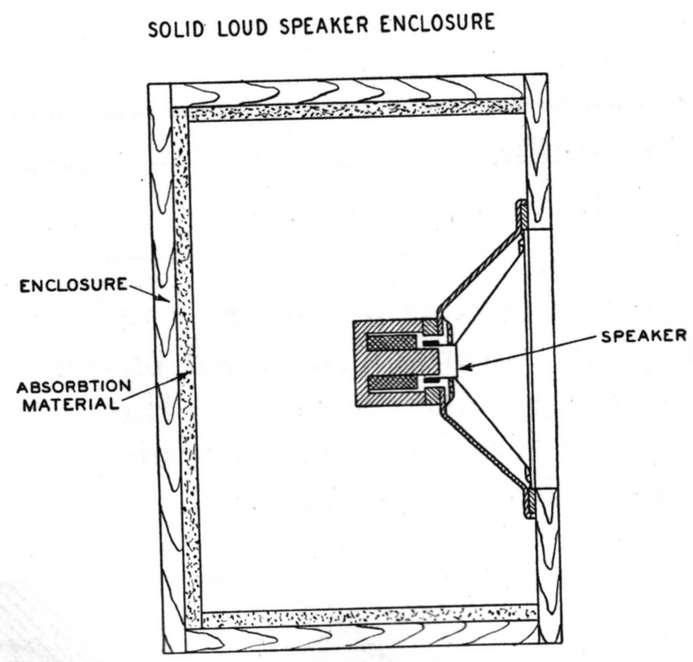

Fig. 3

The stiffness due to the compression of the air in the closed box acts as if the stiffness of the speaker suspension itself were made greater. Cabinet resonance may also occur and cause trouble in the closed-box type of baffle if sufficient absorbent material is not used or if the enclosure is not sufficiently large. The totally closed cabinet is sometimes improperly called an "infinite baffle" although the behavior of the system is quite different

Still more elaborate acoustical loading networks are in common use. In one version a large volume is coupled to the loud speaker and the acoustic enclosure resonance is used to increase low-frequency response. A modification of this method is one in which a column at the rear of the speaker is lined with absorbent material so that the column acts as a long acoustic transmission line.

Figure 4 shows an especially effective type of acoustic loading in which a second opening or "port" in the otherwise complete enclosure is adjacent to the loud speaker diaphragm and is in effect another radiator coupled to the loud speaker diaphragm. This "secondary radiator" (air in the mouth of the port) moves with a given amplitude and phase relative to that of the loud speaker diaphragm in a manner depending upon the speaker design and dimensions of the enclosure and opening. This is known as the "Bass Reflex" principle and results in considerable advantage over the whole low-frequency end of the acoustic spectrum. Only a relatively small amount of sound absorbing material should be placed inside the enclosure, the object being to have a very small absorption at low frequencies. A modification uses a series of short tubes instead of the simple opening in the enclosure.

It is to be emphasized at this point that no effective equalization of the electrical circuits in the driving amplifiers can give the same results as adequate acoustic loading and the subsequent high efficiency of the speaker itself. This is true because: (1) the poorly-baffled loud speaker has inherently more distortion; (2) the highly

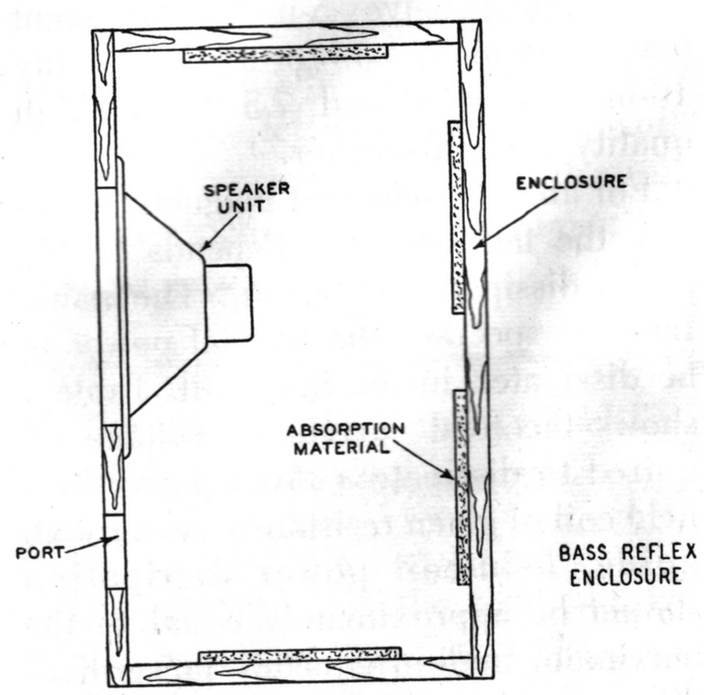

Fig. 4

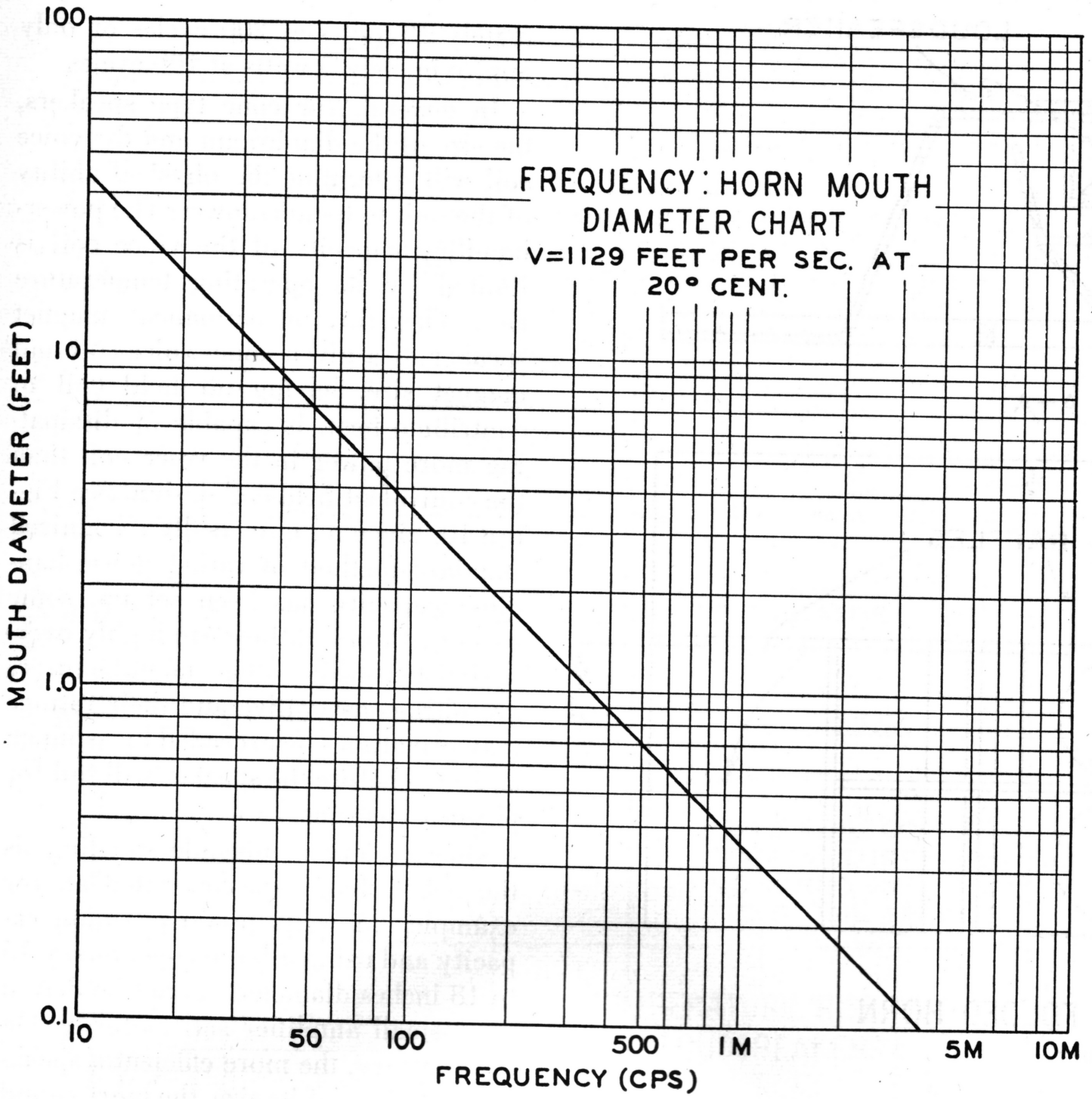

Fig. 5

equalized amplifier may very likely have limited overload characteristics thus introducing considerable amplitude distortion.

IV. Horns and Horn Type Loud Speakers

A horn is a device which is used to couple a relatively small radiator efficiently to the surrounding air. It is essentially a tube of varying cross-section, increasing in size from the loud speaker unit to the open end. Relatively high efficiencies are attained. Furthermore, the horn is relatively directional at medium and high frequencies. (Contrary to popular opinion, horns are almost perfectly *non-directional* at low frequencies.) The most common type is the *exponential* horn in which the area increases exponentially with distance along the horn. The lowest frequency effectively radiated by a horn depends, first, on its rate of change of area, and second, upon its mouth area; the low-frequency end of the range is often called the horn "acoustic cutoff."

The mouth diameter for a horn of circular cross-section should be about one-third of a wavelength at the lowest frequency to be radiated. This relation is shown in Figure 5.

There are three common variations of horns, depending upon their particular function. The most common form is the simple trumpet, or projector-type horn, which has a straight axis with the area expanding according to a definite formula. Figure 6 illustrates this type. A modification is the case in which the complete horn is "coiled" or folded to conserve space.

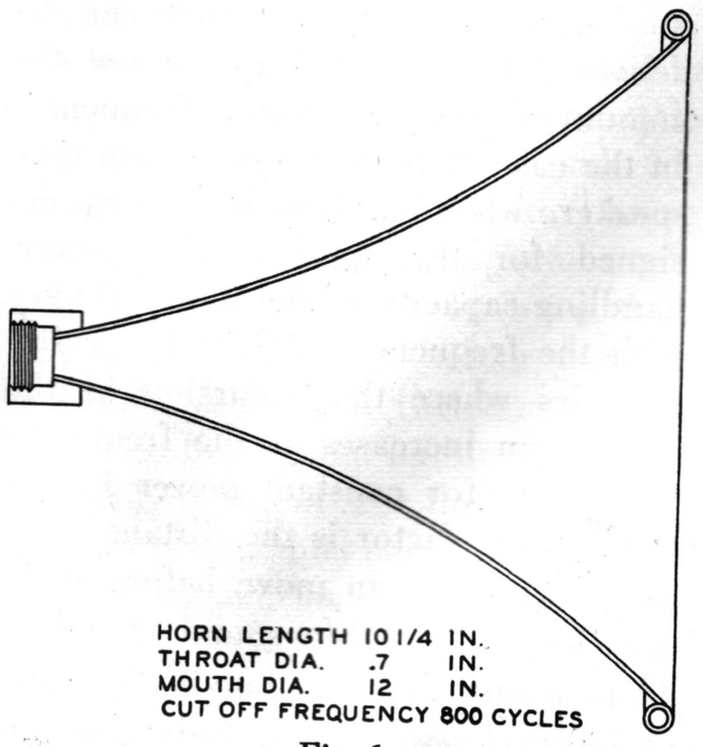

Fig. 6

A second form of horn is known as the multicell in which the area is broken up into a number of sub-areas each expanding individually—that is, a group of individual cells forming an array. These individual cells may be formed by inserting partitions in a simple or trumpet horn or they may be completely separate sub-horns assembled in an array. Figure 7 shows an example of the latter type.

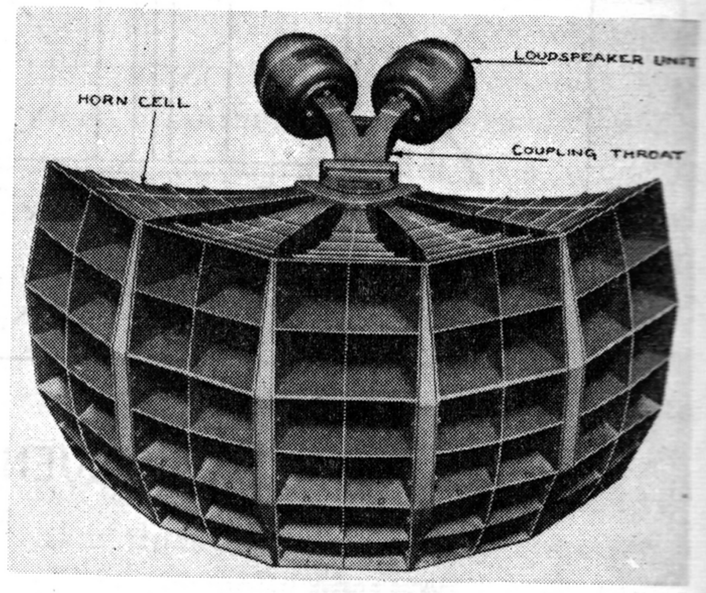

Fig. 7

MULTICELLULAR HORN
Throat Area = 1.718 in²
Mouth Area = 960 in²
Cutoff Freq. = 200 Cycles

The third form is known as the folded or re-entrant type horn in which the axis along which the area expands is no longer a simple straight or curved line. Figure 8 shows one type in which the area expands as a simple horn for a short distance and then becomes an annular area expanding back along the exterior of the first simple horn section. This type of folding may be carried on even further. Figure 9 shows a type commonly used with large diaphragm loud speakers in which the area expands along two channels each

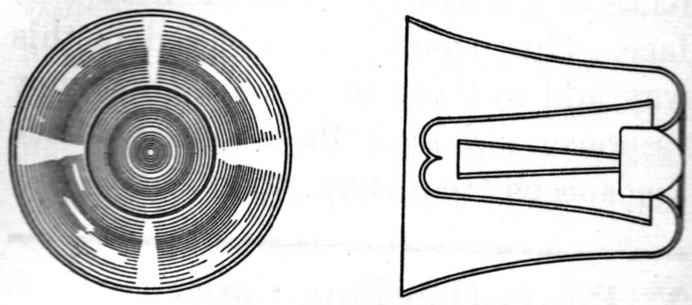

RE-ENTRANT HORN

Fig. 8

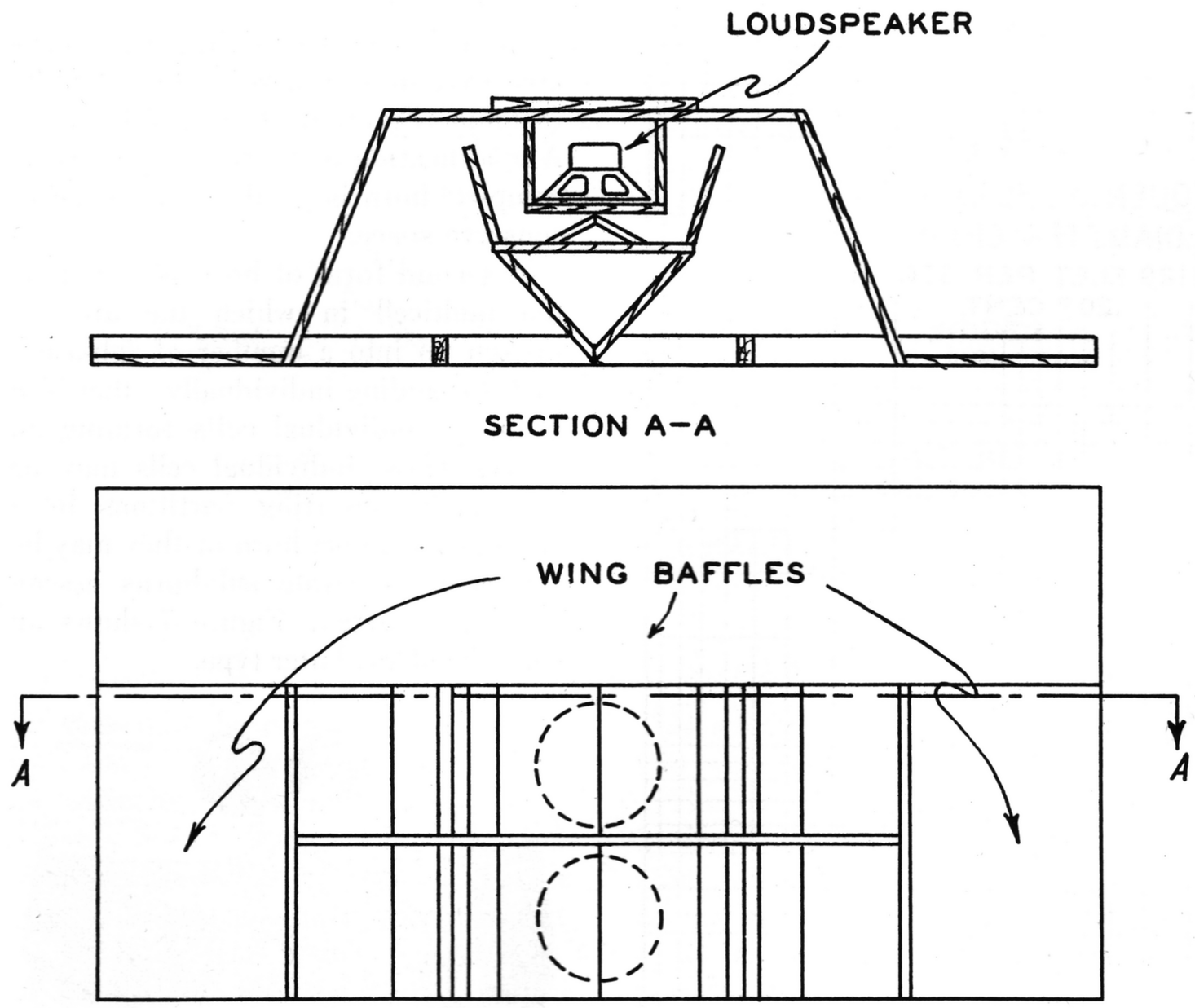

LOW FREQUENCY FOLDED HORN

Fig. 9

folded upon itself. Folded and re-entrant horns are used where economy of space is essential.

Horns are often used with direct radiator speakers, the throat area being approximately the same size as the diaphragm, and are sometimes referred to as "directional baffles." Below the horn "cutoff" the loud speaker merely radiates essentially as it would on a flat baffle of the same area as the horn surface. Thus small "flares" used in this way add *nothing* to the low-frequency response although they may enhance the speech-frequency range.

V. Power-Handling Capacity

Power-handling capacity of a given loud speaker unit is generally determined by the amount of power that can be handled by the speaker before an appreciable amount of distortion is introduced or by the physical ability of the voice coil to dissipate a given amount of power. In most cases, especially where the speaker or speaker system is the high-fidelity type, objectionable distortion will be introduced before the temperature of the voice coil has risen to a point where permanent damage will occur. However, with the standard-fidelity type speaker, i.e., one whose high-frequency response is limited to frequencies below approximately 5,000 cycles, the distortion will not be as noticeable as in the high-fidelity type and it is often possible to damage the voice coil before distortion is noticeable. One important fact to remember is that most manufacturers rate their speakers as to the amount of musical or voice power that can be delivered to the speaker and *not* the amount of power at a *single* frequency. In the case of a metal diaphragm type speaker, when used with a horn designed for the speaker, the power-handling capacity of the unit will vary with the frequency. At the lower frequencies where the excursion of the diaphragm increases as the frequency decreases (for constant power input) the limiting factor is the distance that the diaphragm can move before striking the walls of the sound chamber. Thus, a unit that will handle 20 watts at 400 cycles will handle only approximately 10 watts at 200 cycles or only approximately 5 watts at 100 cycles.

In general, for cone type speakers, the size of the diaphragm and the voice coil will determine the physical ability of the unit to handle power. The power-handling capacity of the voice coil is limited by its operating temperature rise. Therefore a permanent magnet speaker of a given cone, voice-coil and magnet size, having no field coil to contribute heat, is capable of dissipating more power in the voice coil than the equivalent field-coil design. See Figure 10. Since no universally recognized standard method of rating power-handling capacity has been set up, some manufacturers' ratings are highly over-optimistic, while other manufacturers are ultra-conservative and their ratings may oftentimes be exceeded by as much as 100% before the speaker will fail for physical reasons.

One common misunderstanding is the belief that a speaker rated at, for example, 25 watts power-handling capacity and using a large cone, of say 15 to 18 inches diameter, cannot be driven by a small amplifier satisfactorily. On the contrary, the more efficient a speaker, regardless of its size, the more sound output will be delivered by that speaker for any given electrical input power. If an amplifier is normally used with a 12″ speaker having an efficiency of approximately 5%, it can also be used with an 18″ speaker having power-handling capacity of 25 watts or more and an efficiency of 20%, and what is more, the sound output from the larger speaker will be approximately four times (an increase of 6 db) that obtained from the 12″ speaker. In other words a highly efficient speaker requires less power to drive it to a given acoustical output than a small inefficient speaker.

Where a speaker system is used in conjunction with an amplifier having response-equalization or volume-expansion circuits, it is of the utmost importance that the speaker be capable of handling the maximum power that may be delivered by the amplifier. For example, even though the unit may be operated on the average with only 2 watts of power input, it must be capable of handling 20 watts or more if the peak power is increased by 10 db due to expansion or equalization.

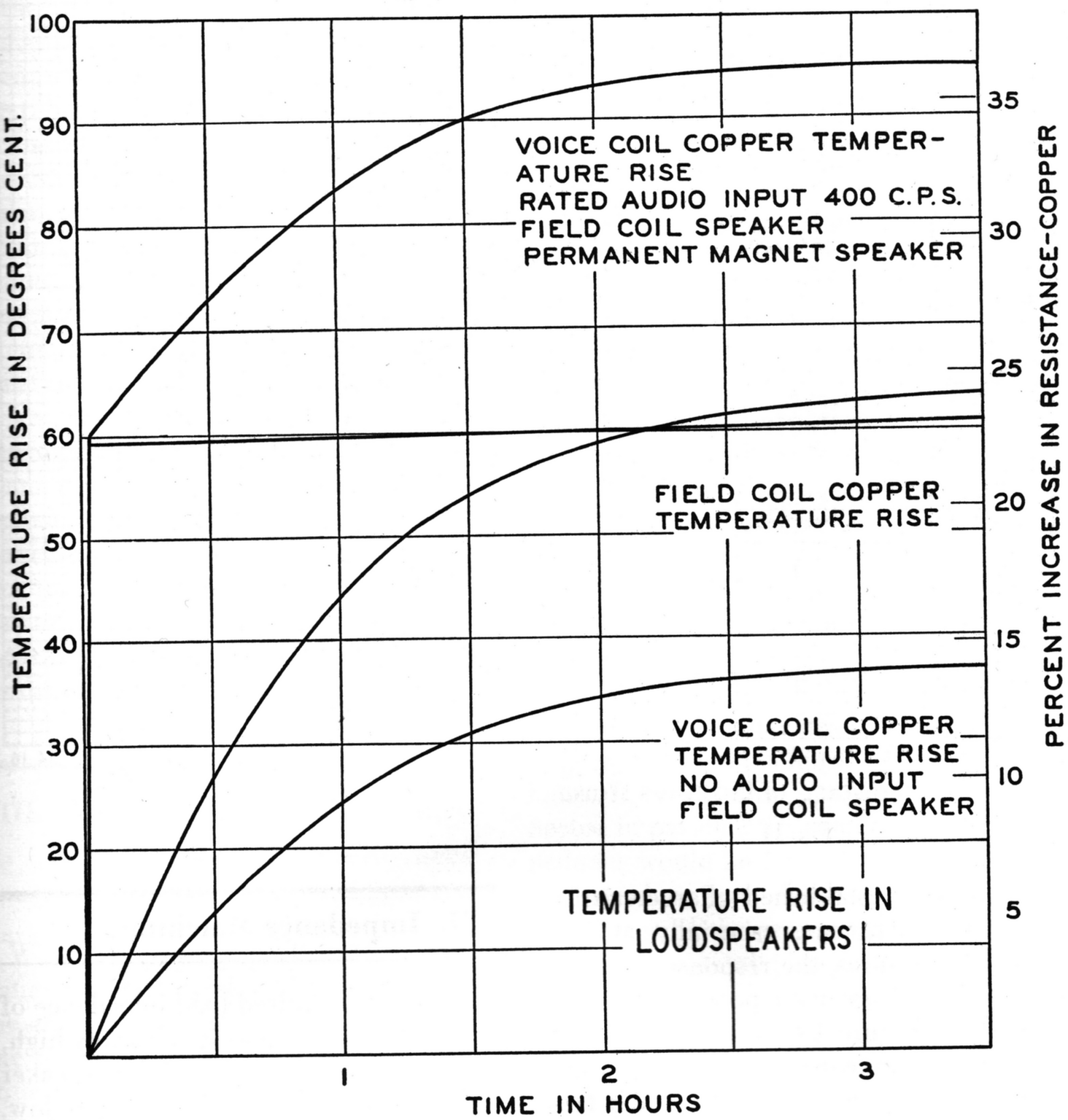

Fig. 10

VI. Frequency Characteristics

The frequency response curve of a loud speaker shows the sound pressure output as frequency is varied. A constant voltage is applied to the grid circuit of the power amplifier which in turn drives the loud speaker under test. It is important to recognize that the frequency response curve of a loud speaker is meaningless unless all of the test conditions including the type of room, driving amplifier and measuring system used, are known. It is impractical for the average user to measure the frequency characteristics of a loud speaker since the measuring equipment required is relatively complicated as compared to that required, for example, in measuring the response of an audio amplifier. Moreover, the acoustics of the room and the location of the microphone and speaker under test, may be so critical that even using the same speaker and microphone, response curves obtained under different conditions may not be similar. For example, the three response curves shown in Figure 11 were run by three well known laboratories on the same loud speaker. Curve No. 1 was run by the manufacturer under outdoor conditions with a single microphone in fixed position in line with the speaker axis. Curve No. 2 was run by another laboratory using the indoor rotating microphone method. Curve No. 3 was run by a third laboratory using the indoor multiple microphone method. The same speaker was used throughout but the results are radically different. For this reason, unless the test method employed is known and the room acoustics are also known, a curve run by one manufacturer cannot be compared with that run by another manufacturer. This explains the hesitancy of some manufacturers in releasing response curves which are likely to be misunderstood by the reader. Of course curves run on the same measuring equipment under identical test conditions are directly comparable. However, since the room conditions in the final installation play such an important part in the quality of reproduction, it sometimes happens that the curves of a particular laboratory show that speaker "A" is more desirable than speaker "B" from a theoretical standpoint, while actually it may be found that when the two speakers are compared side-by-side under living room conditions, speaker "B" is audibly more acceptable to the listener than speaker "A." It is therefore suggested that rather than match a speaker to a given amplifier system and acoustic environment, the amplifier be adapted to match the speaker to that environment. This can be done by incorporating compensation circuits (see Figure 15) either in the form of equalizers or filter circuits, and adjusting them when the speaker is located in the desired position and all other conditions are identical with those under which the system will be normally operated.

There are several types of measurements made on a loud speaker in order to show its frequency response characteristics. The most common is the *axial* response curve run with speaker mounted in some sort of baffle and the microphone located directly in front of the speaker on its axis (generally 18 to 36 inches from the baffle). A curve obtained by this method, however, is not considered a complete picture of the speaker response since it does not take into consideration the directional characteristics of the loud speaker. This type of curve shows only what the listener will hear when his ear is fairly close to the speaker and in line with the axis, which condition is seldom if ever realized in actual practice. Another method sometimes employed is one in which the output of the speaker is measured by the use of a moving microphone. A third method uses a group of microphones located at various positions through the room. In both of these latter methods, the output of the microphone or microphones is averaged so that the sound radiated by the speaker, both on and off the axis, is taken into

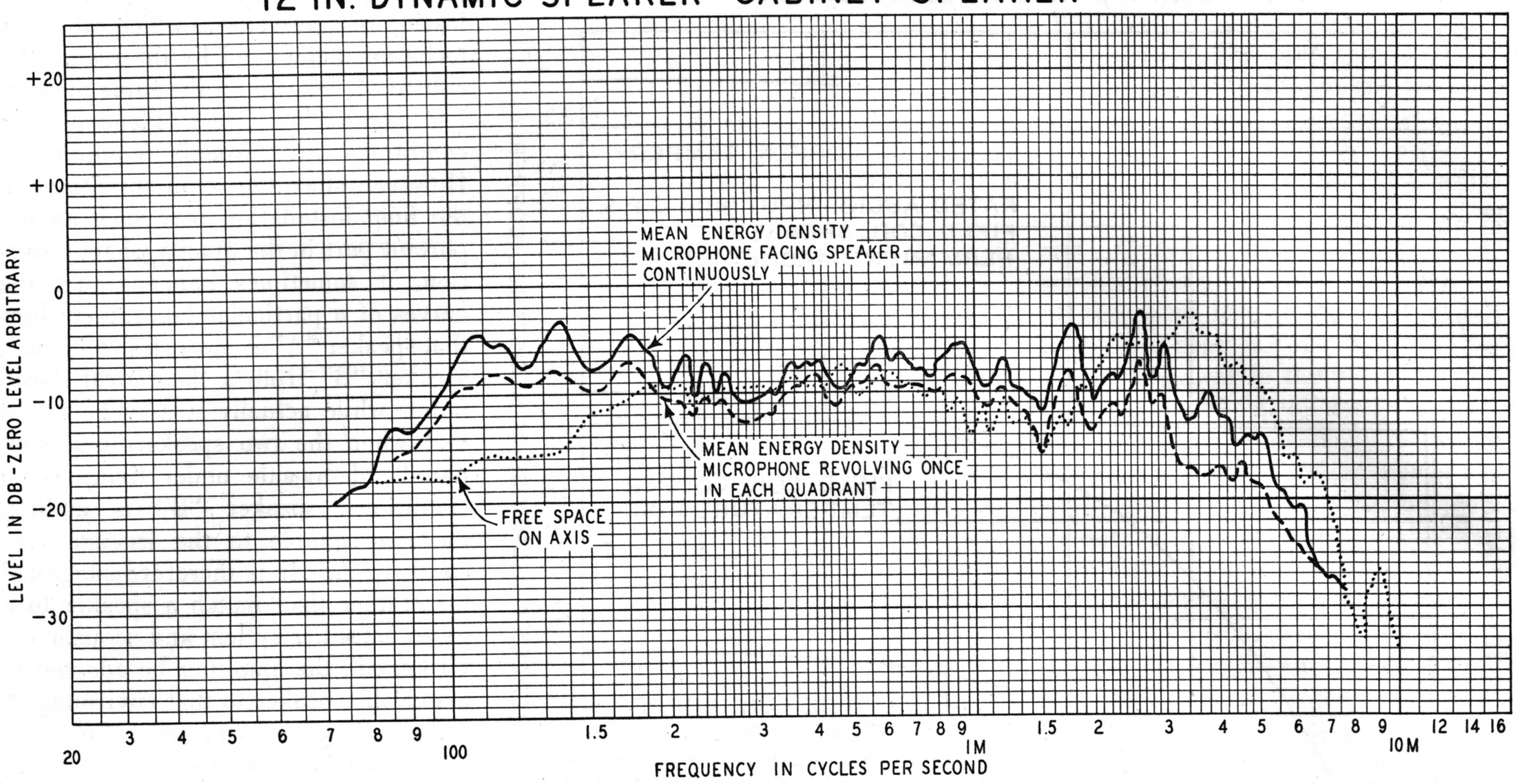

Fig. 11

consideration. Since the output of the loud speaker at the higher frequencies is considerably more directional than at the lower frequencies the multiple or moving microphone method would show less high frequency output from a given speaker than an axial response curve of the same speaker. However, since a multiple microphone curve gives a more complete picture of the overall efficiency of the speaker at all frequencies, at many positions within the room, it provides a more reliable indication of the actual room performance than the axial method. The frequency characteristics of a speaker are determined not only by design of the cone assembly but by the method of baffling, the location within the room and the position of sound absorbent materials and reflecting surfaces. Thus speaker "A," having a tone quality that is considered inferior to speaker "B" in one particular room, may sound much better than speaker "B" if the location of the speaker within the room or the acoustics of the room itself are changed.

It can be shown by means of frequency response curves that the frequency characteristics of a loud speaker do not vary with the amount of power delivered to the voice coil, assuming that the speaker is not overloaded. However, due to well established characteristics of the human ear, especially at low sound intensities, the response does apparently change with power input. As shown in Figure 14, the reduced sensitivity of the ear for low and high frequencies relative to the middle frequencies at low sound intensities, is responsible for this effect. Therefore, in listening tests, means should be provided within the amplifier or elsewhere in the system to compensate for the apparent loss in low-frequency and high-frequency response as the power level is reduced.

VII. Impedance Matching

Since the required load impedance of amplifier power tubes is relatively high, and the impedance of loud speaker voice coils (the load) is relatively low, a transformer is generally used to match these two radically different impedances in order that transfer of power may be efficiently accomplished. It can be shown that the ratio of the transformer primary turns to the secondary turns is the square root of the ratio between the speaker impedance and the

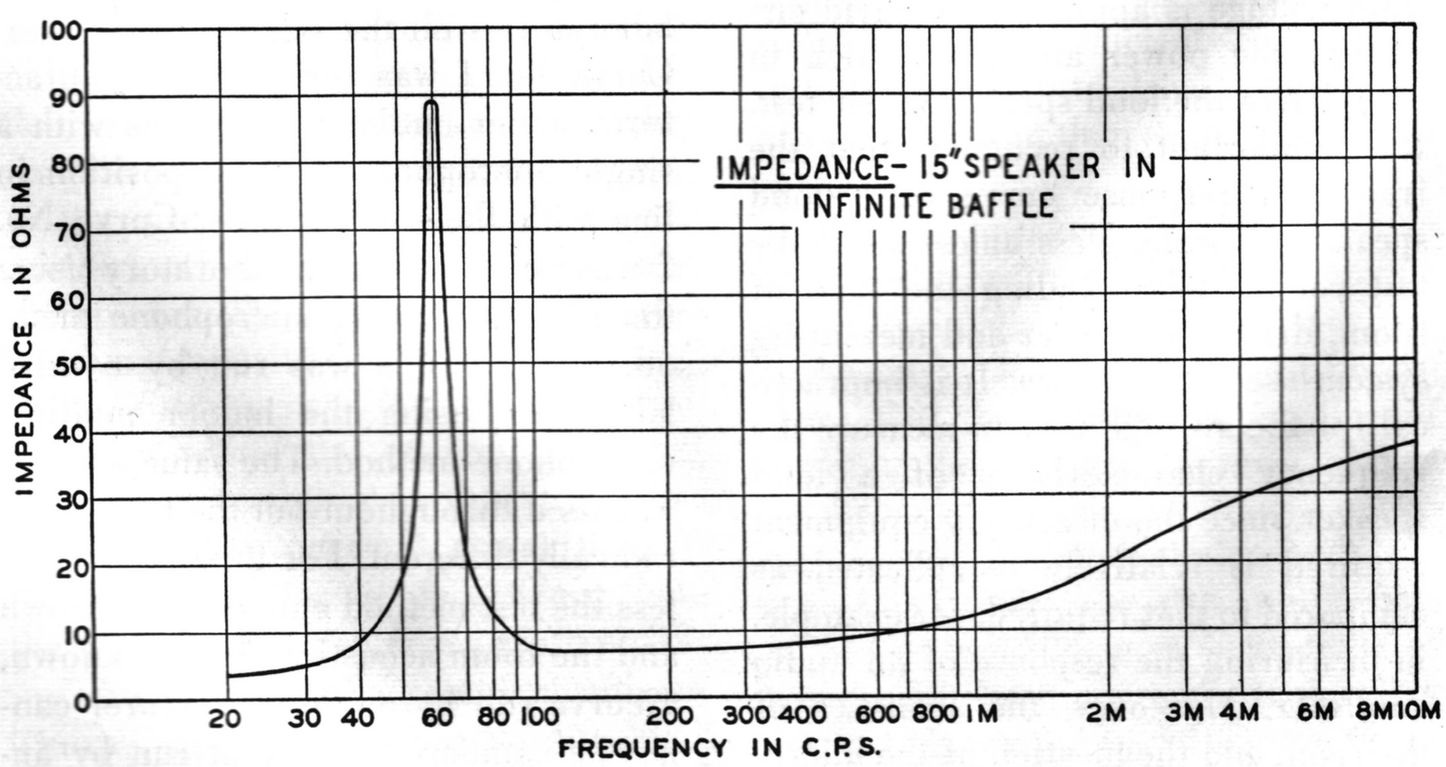

Fig. 12

load impedance required by the output tubes.

The amount of mismatch between the optimum load impedance required by the tubes (tube manufacturers generally list this value in their tube data sheets) and that presented by the loud speaker will depend upon the use to which the system is put. In the case of triode tubes the load impedance presented by the speaker should be equal to, or in excess of, the optimum load resistance required by the tubes in order to keep tube distortion low. Since the impedance of a speaker varies with frequency (see Figure 12), the voice coil impedance is approximately the minimum impedance above the resonant frequency. In general the matching impedance is the 400 cycle impedance for a conventional speaker intended to reproduce both high and low frequencies.

VIII. Audio-Frequency Transmission Lines and Transformers

When connecting speakers to an amplifier two factors should be taken into consideration: First, the power loss, due to line resistance, between the amplifier and speakers should be held to a reasonable minimum value, and second, the loss due to line capacity at the highest frequency which is to be reproduced must not become appreciable. Both effects are related to the length of the line and the impedance at which the line is operated. In general, if the distance between the amplifier and the speakers is less than 25 or 30 feet, the impedance of the connecting line (high impedance, low impedance, or voice coil) is not important and the most convenient impedance may be used. When a distance greater than about 25 or 30 feet separates the amplifier and the speakers, it is then necessary to take the resistance and capacity of the leads into account.

Lines at Voice-Call Impedance

The following table (Table 2) of maximum lengths (2 wires) of voice-coil lines assumes a maximum line resistance equal to 15% of the voice coil impedance. This limits the power loss in the line to about 15% of that delivered to the speakers. The capacity of the lines is here considered negligible.

TABLE 2

WIRE SIZE (B & S Gauge)	MAXIMUM LENGTH OF LINE, FEET			
	Voice Coil Impedance			
	4 ohms	6 ohms	8 ohms	10 ohms
No. 12	190 feet	288 feet	385 feet	480 feet
No. 14	120 feet	180 feet	240 feet	300 feet
No. 16	75 feet	110 feet	150 feet	190 feet
No. 18	47 feet	70 feet	95 feet	118 feet
No. 20	30 feet	45 feet	60 feet	75 feet
No. 22	19 feet	28 feet	37 feet	46 feet

In the above table, the voice-coil impedance value is the *total* impedance on one transmission line. If a single speaker is connected, then the total impedance is the voice coil impedance of the one speaker; if two 4 ohm speakers in series are connected, then the total impedance is 8 ohms and line lengths would be read in the 8 ohm column. On the other hand, if two 8 ohm speakers are connected in parallel, the resulting total impedance would be 4 ohms. If more than two speakers are employed, the total impedance of the group must be calculated. If the total impedance falls between values used in the table, the line length can be estimated with sufficient accuracy for practical purposes.

If the use of Table 2 shows insufficient permissible line length at voice coil impedance, then the line length can be increased by working at a higher impedance. For a given transmission line, the higher the value of operating line impedance, the lower will be the power losses due to the resistance of the line. However, the high-frequency losses in a line due to the capacity between conductors are greater in a high-impedance line than in a low-impedance line. A "500 ohm" line will usually afford an acceptable compromise between the resistance losses and the losses due to the capacity of the leads.

At this point, it might be well to define a "500 ohm" load. A "500 ohm" load is one whose impedance is approximately (plus or minus 10%) 500 ohms when measured at the amplifier end of the line and includes all speakers, filters, level controls, and transformers that may be connected across the line. In other words, the impedance of the total "load" including the line must match that of the 500 ohm output transformer. This means that in order to connect several speakers together in parallel across a "500 ohm" line, the total impedance of the "load" must be 500 ohms for *all* speakers, not individually. For example: If four speakers with their individual transformers are all connected in parallel across a "500 ohm" line, each speaker with its own transformer must have an impedance of 2,000 ohms, not 500 ohms. Thus, with four 2,000 ohm "loads" connected in parallel, the resulting total impedance would be one-fourth of 2,000 ohms or 500 ohms. Of course, four speakers with 500 ohm transformers could be connected in series-parallel across the 500 ohm line.

For the purpose of computing the "effective impedance" of a group of speakers connected in parallel, use the following equation:

$$\frac{1}{Z} = \frac{1}{Z_1} + \frac{1}{Z_2} + \frac{1}{Z_3} + \frac{1}{Z_4} + \frac{1}{Z_5}$$

or in the special case of 3 impedances in parallel:

$$Z = \frac{Z_1 \times Z_2 \times Z_3}{Z_2 Z_3 + Z_1 Z_3 + Z_1 Z_2}$$

Where: Z is the effective Impedance of the circuit

Z_1 is the Impedance of the first speaker

Z_2 is the Impedance of the second speaker

Z_3 is the Impedance of the third speaker

etc.

This reasoning applies to all types of loads such as transformers, speakers, filters and level controls regardless of the number used. The effective parallel impedance of *all the loads together*, when connected across a "500 ohm" line, must be 500 ohms. The exception to this is when a filter or level control, etc., of the so-called 500 ohm input and 500 ohm output type is used. With a device of this kind the line is thought of as simply passing through the device without its acting as a load. However, if two or more of these devices are connected in parallel across the line, they must be considered as separate loads and are treated accordingly.

With this fact in mind, we may now consider the methods of connecting the amplifier and the "loads" to the line. This is done by means of "impedance matching" transformers. The transformers are so designed that, with a given value of load impedance connected across one winding, the impedance measured across the other winding is the required value. In a large well-designed transformer, there will be negligible loss of energy due to this transformation (usually about 10%). Thus, a plate-to-line transformer is used to transfer the output of the power tubes at their inherently high impedance to a low-impedance line. For example: If the plate-to-plate load impedance required for a pair of output tubes in push-pull is 4,500 ohms, a plate-to-plate transformer with an impedance ratio of nine to one will be required in order to match these output tubes to a 500 ohm line.

In order to keep the loss of the line at a minimum, the total resistance of the conductors themselves and their capacity must be limited to reasonable values. The total resistance of the line should not be more than about 5% of the load and should preferably be less. Thus, if a pair of No. 14 wires is to be used as a 500 ohm line, the line should not be more than 5,000 feet long (10,000 feet of wire, resistance 2.52 ohms per thousand feet) if the allowable resistance is not to be exceeded.

Upon this basis the maximum length of line (2 wires) for various sizes of conductor is as follows (Table 3):

TABLE 3—500 ohm line

WIRE SIZE (B & S Gauge)	MAXIMUM LENGTH (Resistance = 25 ohms)
No. 12	8,000 feet
No. 14	5,000 feet
No. 16	3,100 feet
No. 18	2,000 feet
No. 20	1,200 feet
No. 22	780 feet

The other factor controlling the permissible length of the "500 ohm" line is the capacity of the leads which causes a loss (attenuation) of the higher frequencies. Ordinary twisted pair or lead-covered cable has a capacity of approximately 50 mmfd. per foot. On this basis a "500 ohm" line will be limited in length to 600 feet if it is desired to keep the attenuation at 10,000 cps. less than 3 db at the highest desired frequency. This assumes, of course, that the resistance losses due to the size of the wire used for the line do not exceed 25 ohms (see Table 3). The calculation of losses at high frequencies takes into consideration the capacity of the line and the fact that the impedance of a dynamic speaker is higher than the rated value at the higher frequencies.

TABLE 4—500 ohm line

HIGHEST FREQUENCY DESIRED	MAXIMUM LENGTH (Loss at highest frequency = 3 db)
20,000 cycles per second	300 feet
15,000 cycles per second	400 feet
10,000 cycles per second	600 feet
7,500 cycles per second	900 feet
5,000 cycles per second	1,200 feet

Thus if it is found necessary to run a line longer than 600 feet and still reproduce frequencies up to 10,000 cps. without attenuation, it will be necessary to use an equalizer (preferably within the amplifier or its input circuit) to compensate for the loss due to the capacity of the line, or to operate at a lower line impedance.

The choice of transformers at the load end of the line is dependent upon the number and type of speakers involved. If all the speakers have the same voice-coil impedance at 400 cycles (400 cycles is the usual matching frequency for dynamic speakers) and all are mounted close together, all the voice coils may be connected in parallel and through one transformer to the line. The transformer must be large enough to handle the power involved and, with all the speakers connected in parallel to the transformer secondary, the primary impedance must have the required value. Thus, if six speakers each having 6-ohm voice coils are to be connected in parallel to a 500 ohm line, the resulting parallel impedance of the voice coils will be 1 ohm and the correct transformer to use will be one with a 500 ohm primary and a 1 ohm secondary. If, however, the speakers are separated by more than one-half the allowable distance given in Table 2, or have different voice-coil impedances, it will then be necessary to use separate line-to-voice-coil transformers for each speaker. In this case, the primary impedance of each of the transformers will have to be 3,000 ohms so that when all six transformers are connected in parallel, the resulting impedance will be 500 ohms.

This brings up the relative merits of series and parallel connections. The main objection to the series method of connections is that, in case of the failure of one unit by open-circuiting, the entire system becomes inoperative. The use of series connections of speakers or transformers is sometimes a practical necessity, however, as in the case of matching two 8 ohm voice coil speakers to a transformer which has only a 16 ohm secondary. Then, of course, the most economical method is to connect the voice coils in series.

Phasing

When more than one speaker is used in an installation, it is important to operate all the voice coils "in-phase." That is, all the diaphragms should move in the same direction at the same instant. If they are not in-phase, the sound output will be materially reduced because the sound from one unit will cancel that of the other. The most simple method of checking the phase of

speakers is to first connect and excite the fields of all the speakers and then short out the "bucking coils," if any, temporarily. Then take a dry cell battery (1½ volts) and touch the positive side of the battery to one voice coil lead and the negative side to the other voice coil lead. The cone will "jump" either in or out at the instant the battery is connected. Test all the speakers in the same manner, marking the lead on each speaker which was connected to the positive battery terminal when the cone "jumped" *out*. For parallel operation, connect all the leads that went to the positive side together and all those that went to the negative side together and the speakers will be correctly phased. If series operation is necessary, connect between unlike terminals in the usual manner. In order to reverse the phase of any speaker, simply reverse the voice coil connections, leaving the field connections the same as they were before. If it is desired to phase several speakers each having its own transformer attached, the same procedure as outlined above is followed except that a battery of about 22½ volts and the primary leads of the transformer (instead of the voice coil leads) are used (voice coil leads are to be attached to transformer secondary leads, and "bucking coil" shorted out temporarily).

IX. Applications

Replacements

When installing a replacement speaker there are several important points to consider other than the obvious ones of physical size, transformer impedance and field coil resistance. Probably the one least considered is the size of the field coil. The amount of copper in the field will have a direct bearing on the amount of power that can safely be dissipated in the field without overheating and causing a mechanical failure. It will also have a decided effect upon the efficiency and performance of the speaker. For example, if the original speaker (say a 5 inch speaker) had a relatively large field coil, say 2,500 ohms No. 35 wire (.73 lbs. of copper) and dissipated 5 watts of power, it would be inviting trouble to use a replacement speaker having the smallest possible field coil of the same resistance just because it is less expensive. Using the smaller field would cause the field to run very much hotter (the original field was probably hot enough) than advisable which could easily cause the new field or the voice coil to fail very soon. On the other hand if the original field was relatively small and failure was not due to overheating, there is little to be gained by going to a large field coil unless, of course, the power delivered to the new field coil can be increased accordingly without upsetting the plate voltages throughout the receiver. Therefore, whenever possible, use a replacement speaker having a field coil of approximately the same physical size as that of the original.

At this point it may be well to point out the improved performance obtainable by replacing the field coil type speakers supplied originally in the older A.C.-D.C. sets with a P.M. type speaker. This change will reduce the drain on the rectifier tube and possibly improve efficiency. This should only be done, however, when the original field coil was connected directly from the positive high voltage to ground, *not* when it was used as a bias resistor or as a choke in the power supply unless the original field is replaced by an equivalent fixed resistor.

Oftentime when replacing the original speaker it is desirable to use a larger speaker where it can be accommodated, as for example in a large console. In general, increasing the diameter of the speaker cone will increase the bass response of the system, assuming of course that the amplifier will pass the lower frequencies. Here, too, the size of the field coil must be considered for there is little to be gained if the original speaker had six watts in the field and the larger replacement requires fifteen watts of field excitation. True, the low-frequency response may be improved, but it could probably be improved just as much by using a less expensive speaker with the same larger cone diameter as the 15-watt speaker but having a smaller field that would be fully excited with six watts. However, if means are available for increasing the field excitation at the same time, then use the larger field because the output of the larger field coil speaker will be greater and there will be less low-frequency distortion due to the increased damping action of the larger magnet structure.

The substitution of a larger speaker than the original, especially in the case of midget receivers, is a subject that should be considered by every service engineer. The chief objection to midget sets is their lack of low-frequency response. Obviously with such a small baffle and speaker the bass response of the set will suffer. One solution to the problem is to use a larger speaker in a separate cabinet or baffle. Substituting a twelve, fifteen or even eighteen-inch speaker for the original 4 or 5-inch speaker is indeed a revelation. Usually it is only necessary to disconnect the original transformer and substitute a larger transformer to match the voice coil of the new speaker to the output stage. Leave the field of the original speaker connected in the circuit in order not to upset the plate voltages and use a P.M. speaker (or one with its own power supply) for the new speaker. Increasing the bass response by this method will increase the hum also, but this can be reduced to an acceptable amount by the addition of filter condensers or at the most by the use of a second "30 henry" choke in the power supply circuit.

P. A. Installations

The size and type of speaker system in a P. A. installation should be governed almost entirely by the size, type, location, audience to be covered, the type of sound to be reproduced and the psychological reaction desired of the audience. This, of course, requires that each installation be analyzed *before* the installation is even started. Accordingly the analysis of the job should cover the following points:

INDOORS

Size of auditorium.
Area to be covered.
Dimensions.
Approximate size of audience and location of same.
Actual volume of the room in cubic feet.
The reverberation time, if known.
Seating capacity.
Type and distribution of absorbing materials.
Location of orchestra or source of pickup.
Desired position of speakers and microphones.
Ambient noise level.
Type of service.
- **Voice or music reinforcement.**
- **Remote pickup.**
- **Symphony or jazz orchestra.**
- **Point source illusion.**

Frequency characteristics of phonograph pickup microphone.

Amplifier.
Audio power available.
Desired coverage.
PERMISSIBLE COST.

OUTDOORS

Area to be covered, in square feet.
Dimensions.
Approximate size and location of audience.
Desired location of microphones and speakers.
Ambient noise level.
Loudest noise which system must override.
Type of service.
  Voice or music reinforcement.
  Remote pickup.
  Symphony or jazz orchestra.
  Point source illusion.
Frequency characteristics of phonograph pickup microphone.
Amplifier.
Audio power available.
Desired coverage.
PERMISSIBLE COST.

If these facts are known it then becomes relatively simple to determine the possible locations and types of speaker system applicable in view of all requirements. The amount of audio power can best be determined by the size of the audience—if outdoors roughly 5 watts per thousand square feet, or indoors in accordance with the data given in Figure 13. Of course, the ambient noise level outdoors and noise level as well as the acoustics of the room indoors will have considerable bearing on the final choice of speakers. It is always advisable to have more amplifier power available than the necessary minimum as a margin of safety against distortion. Adequate power-handling capacity should be available in the installation of loud speakers. Since cost is often of predominating importance it may be necessary to arrive at some suitable compromise between location and type of speakers finally used as compared with the ideal choice. Wherever possible, if it is desirable to create the illusion of the original source, the speakers should be mounted in a cluster and as near the source as possible—generally directly overhead. Outdoors, of course, this requires that higher powered speakers be used than if the sound were distributed at low level throughout the audience but this may be more desirable than the distracting effect upon the audience of having the performer in front of them and hearing his voice coming from behind or overhead. Whenever it is necessary that sound be distributed from some point other than the point of origin, it is always advisable to operate the speakers at as low a level as is consistent with intelligibility.

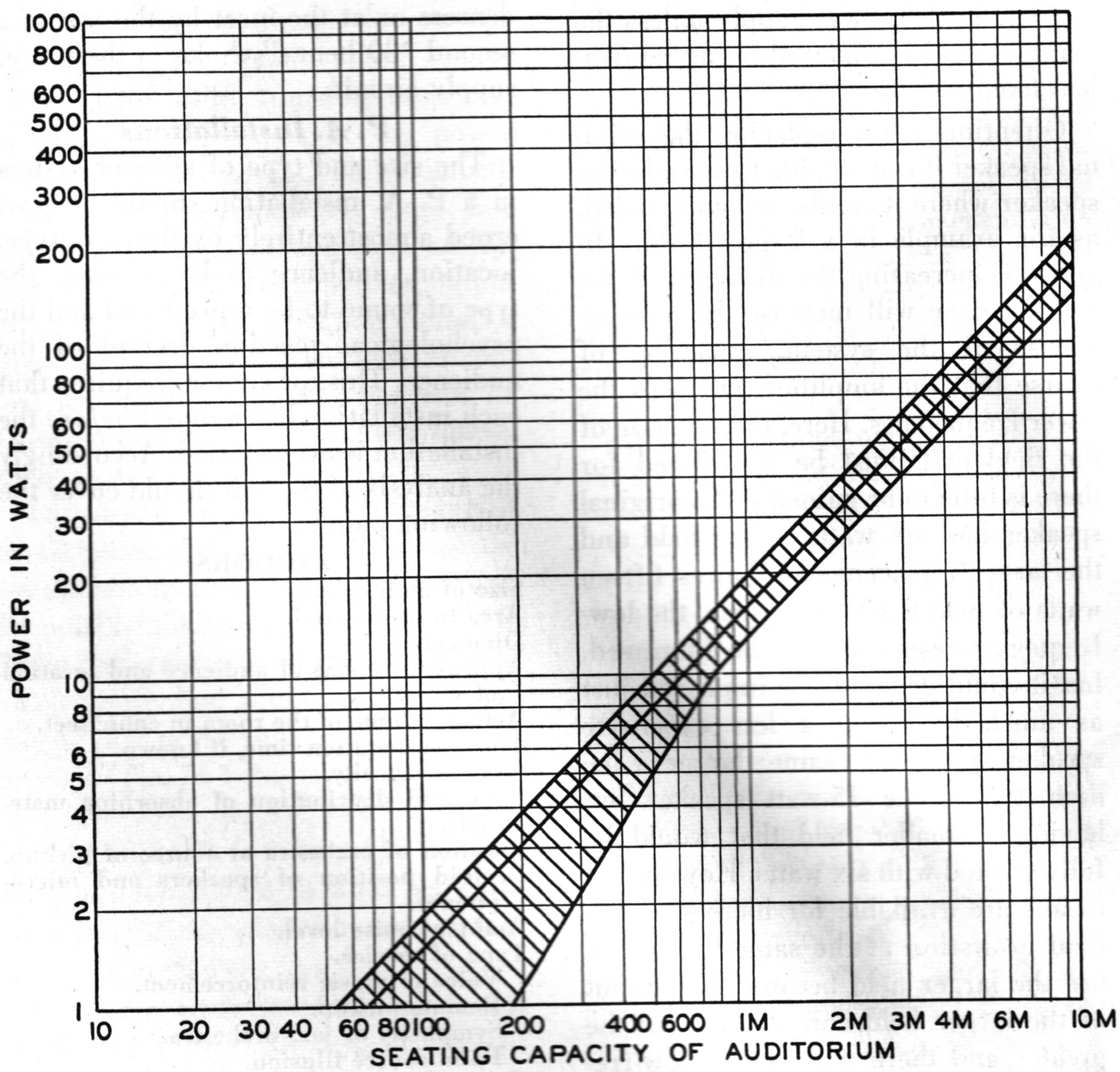

Fig. 13

Where the system is required to reproduce voice only, for example in a football announcing system, it is not necessary that frequencies below 150 to 250 cycles be reproduced by the speaker system. This permits the use of either the new multicellular horns and driving units or short trumpets. The former are to be preferred, especially where a highly efficient speaker system is advisable and where maximum intelligibility is desired. However, where cost is the more important factor, trumpets can be substituted unless, of course, the number of trumpets required is such that it would be more economical to use a multicellular horn.

Where the reproduction of both music and voice is required, a large horn, baffle, or suitable speaker enclosure is of importance in order to reproduce the lower frequencies (see section 4). Thus, in an installation where at times only voice will be reproduced and at other times a full orchestra, it may be desirable to use a two-way system consisting of suitable low-frequency unit and multicellular horn and unit. In this way the multicellular high-frequency system could be used where voice only is being reproduced and the entire system could be used for the reproduction of music. This would be by far the most economical use of all possible components and at the same time would result in the most efficient possible speaker system.

Provision should be made, when using a speaker system outdoors, to prevent exposure to excessive humidity. This would require that the system itself either be weatherproofed or that arrangements be made to cover the system during rain or snow storms.

One important factor to keep in mind is the distance over which sound must be projected from a given speaker system, since sound energy diminishes approximately as the square of the distance from the source. In other words, if a speaker system will lay down the desired sound power at a distance of 100 feet with an input of 10 watts, 100 times as much power or 1,000 watts will

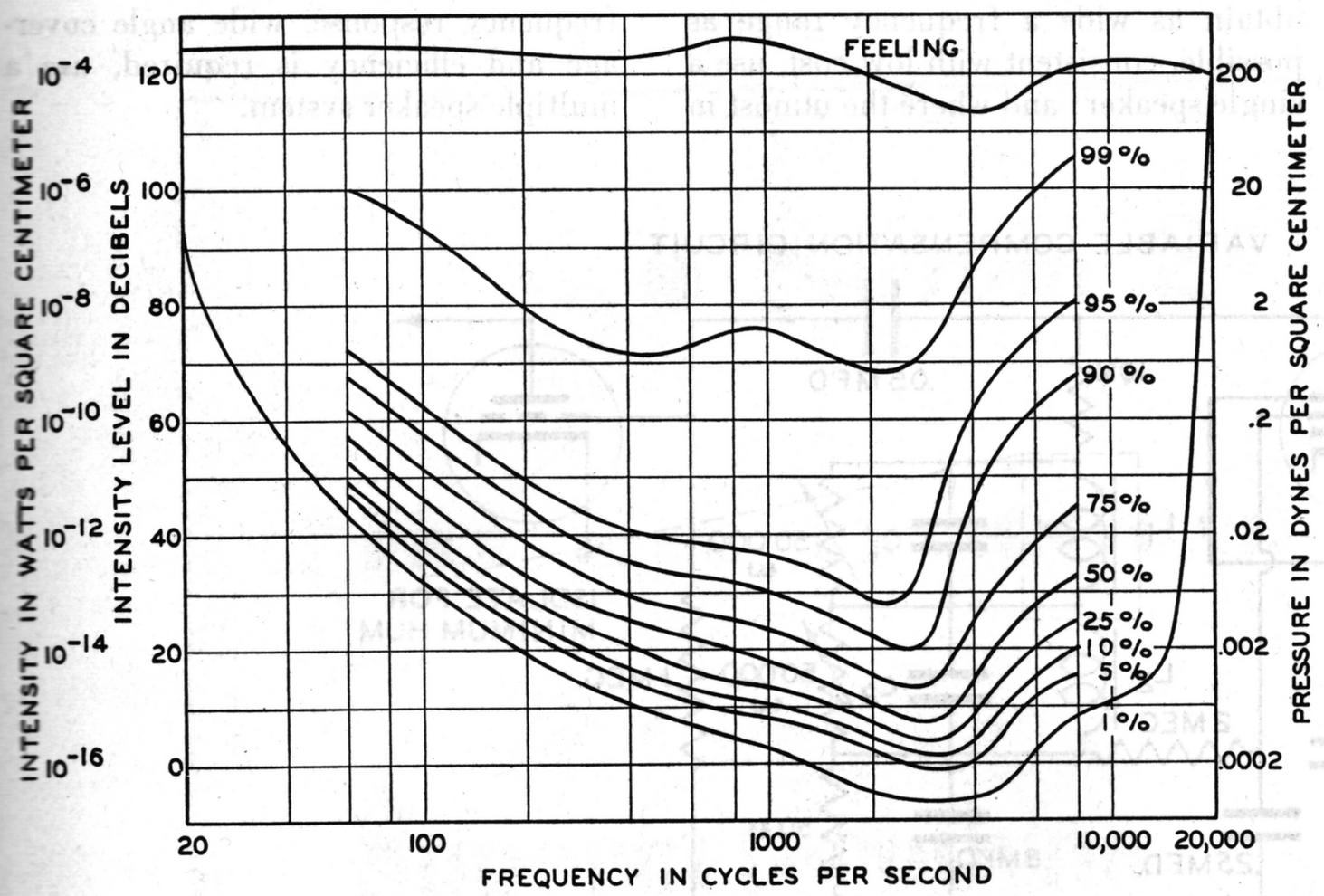

Fig. 14

be required if the distance is increased to 1,000 feet. As a result, both the amplifier and the speaker system must be designed to handle the required power.

Phonographs

Recent developments in recording practice and improvements in phonograph pickups make it definitely worthwhile to provide extended-range loud speakers for high quality reproduction of commercial phonograph records. Surface noise (or "needle scratch") is, of course, somewhat more noticeable as the response range of the system is extended into the high frequencies. However, many listeners definitely prefer the reproduction obtainable with such equipment over that provided by standard fidelity speakers which usually give predominant emphasis to the middle high-frequency region. It is highly desirable to provide means for adjusting the high-frequency response of the system, so that fewer "highs" are reproduced when playing old or worn records. It should be remembered that surface noise covers practically the entire audible frequency range, and it can be reduced only by restricting the range which is reproduced. The low-frequency response of the speaker system should be good and enclosures of the "Bass Reflex" type are particularly suitable. The new Single, Concentric and two-way extended-range loud speakers are particularly suggested for high-quality record reproduction.

Since oftentimes phonograph records are reproduced in the home at much lower volume levels than those at which they were originally recorded the frequency characteristics of the human ear must be taken into consideration. It is therefore desirable to incorporate both high and low-frequency compensation circuits (see Figures 14 and 15) within the amplifier so that the quality of reproduction may be adjusted in accordance with the level of reproduction, the acoustics of the room and the listener's preference.

Volume Expansion

With a properly designed volume expansion circuit the reproduction of phonograph recordings, especially symphonic, can be made much more realistic since for practical reasons most symphonic recordings are compressed when originally recorded. This compression is generally done automatically in the case of phonograph recordings, whereas in the case of broadcasting stations the compression is done manually in accordance with the best judgment of the operator at the time. Volume expansion is, therefore, not generally used for the reproduction of radio programs but is considered desirable or even necessary for high quality phonograph reproduction. It must be kept in mind, however, that when compensation or volume expansion is used in an amplifier, both the output stage of the amplifier and the speaker system must be capable of reproducing the loudest passage without introducing appreciable distortion. For example, in the ordinary home living room and without either compensation circuits or volume expansion, an amplifier having an output of 2 to 4 watts is ample. However, if compensation circuits or volume expansion having 10 db gain are introduced, the output stage must be capable of delivering 20 to 40 watts power without introducing distortion.

Custom Built Sets, Television and Frequency Modulation Receivers

These receivers require a speaker system having as wide a range of response as is practical, consistent with the cost and performance desired.

Single diaphragm type speakers are now available covering the range from below 60 cycles to 10,000 cycles and above. For most installations, especially where cost is important, they will serve very well. However, in general they are less efficient than an equivalent sized standard type speaker and they are more directional at the higher frequencies than a specially designed tweeter. This first objection is not too important because most amplifiers have ample reserve power, but the highly directional characteristics above 5,000 cycles may be quite objectionable.

In order to overcome this shortcoming and to provide an even greater frequency range, two-way speaker systems are recommended. When using two speakers to cover the audio spectrum it is possible to design a speaker that will do a better job of covering its portion of the band than the single wide-range speaker. In other words, the larger the cone, in general, the better the low-frequency response; but the smaller the cone the less directional the highs. This does not infer that any small cone type speaker is inherently a good high-frequency speaker. By using a metal diaphragm high-frequency horn type speaker a relatively small unit can be made to reproduce the higher frequencies more efficiently and with less directional effects than a larger wide-range speaker. A two-way speaker system also requires a dividing network of

some sort but such a system can be made quite efficient and need not be too expensive. Thus, where it is desirable to obtain as wide a frequency range as possible, consistent with low cost, use a single speaker; and where the utmost in frequency response, wide angle coverage and efficiency is required, use a multiple speaker system.

VARIABLE COMPENSATION CIRCUIT

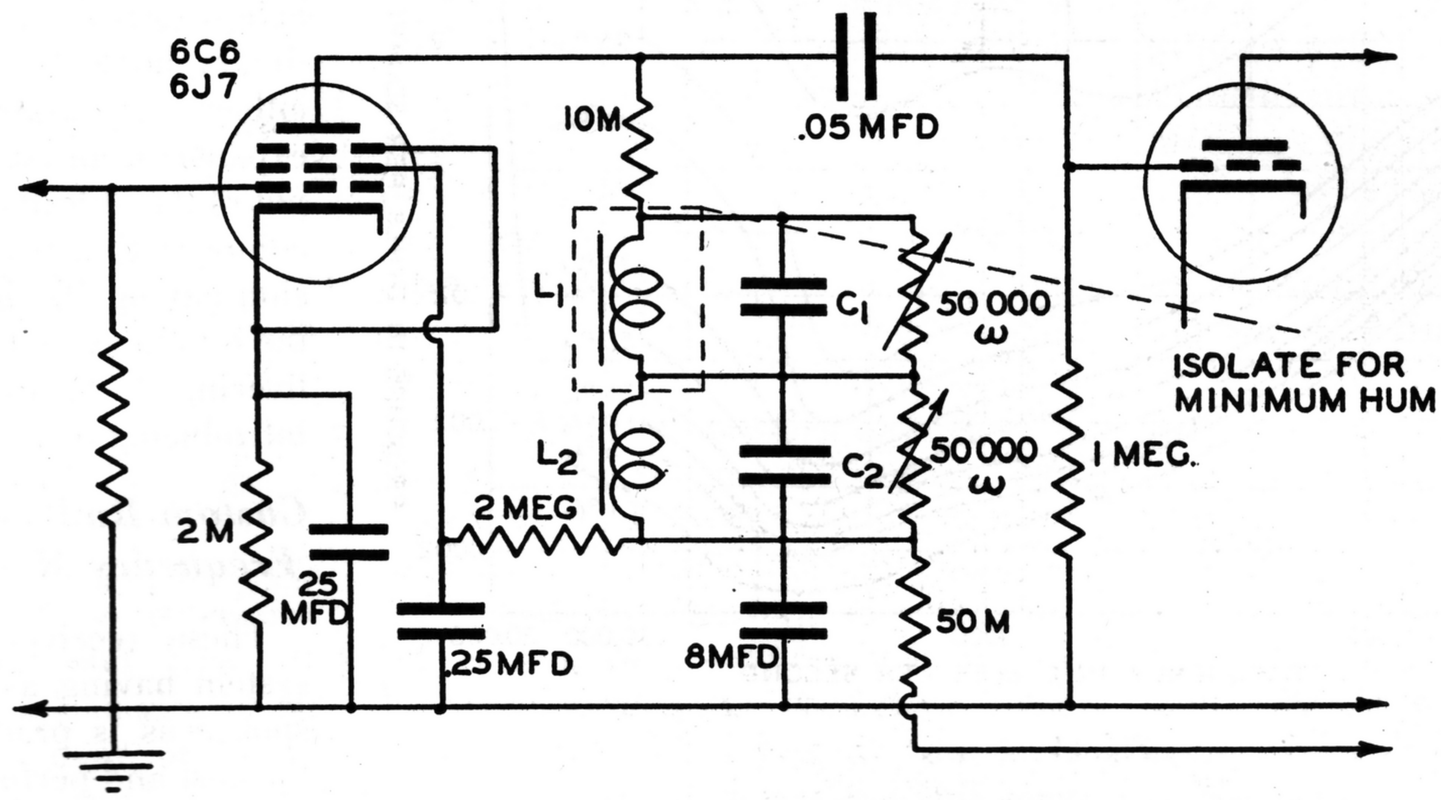

L1 = CHOKE (30 HEN.)
L2 = CHOKE (1/2 HEN.)
C1 = .25 MFD. TO RESONATE CIRCUIT AT 60 CYCLES APPROX.
C2 = .002 MFD. TO RESONATE CIRCUIT AT 5000 CYCLES APPROX.

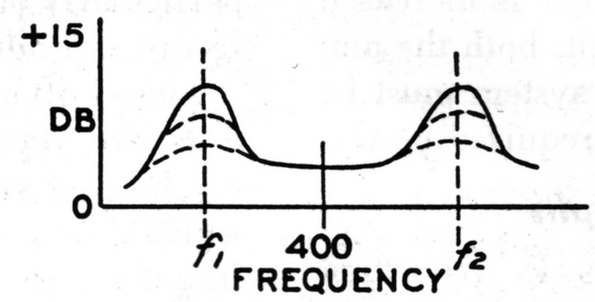

NON-VARIABLE COMPENSATION CIRCUIT

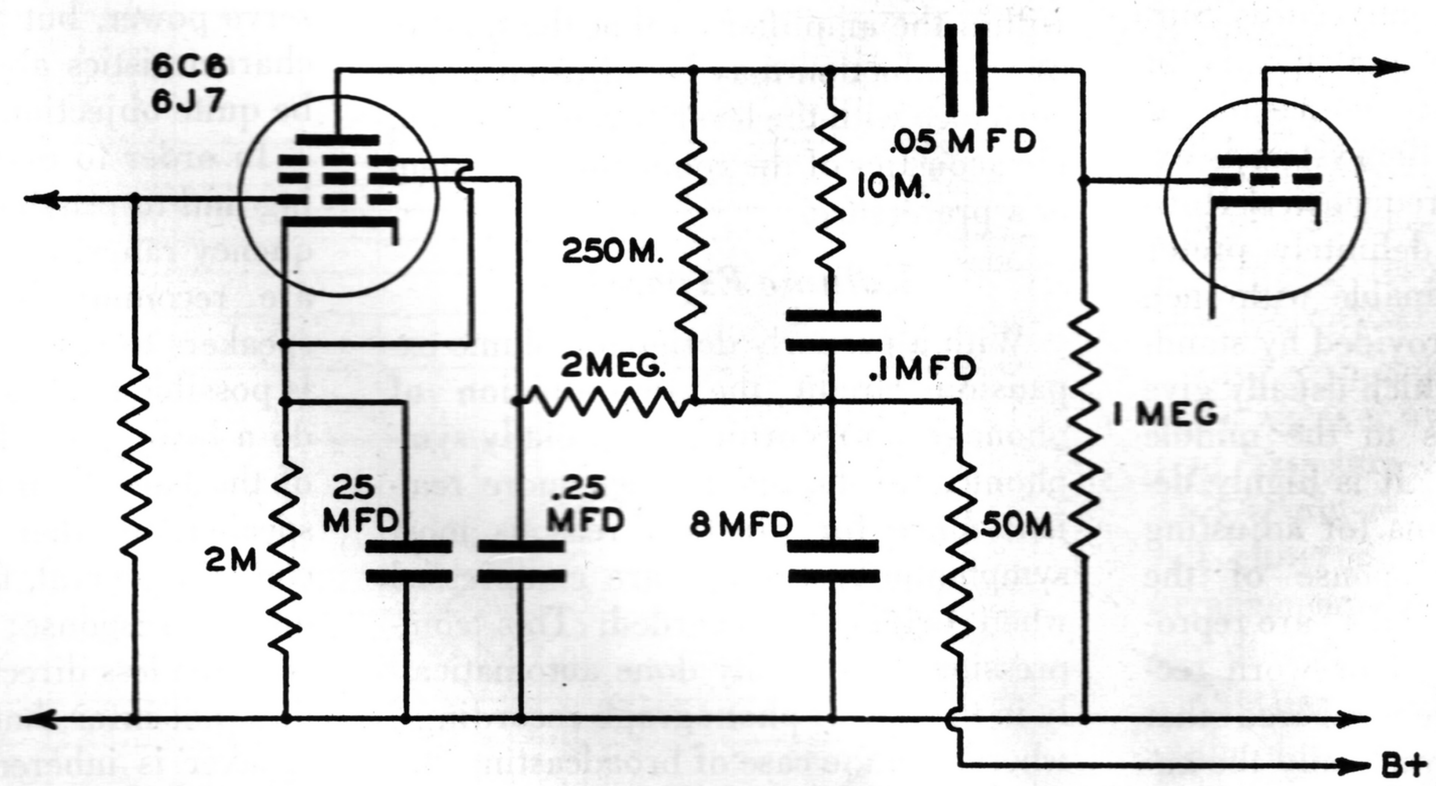

NOTE—IN ORDER TO PREVENT DISTORTION THESE CIRCUITS MUST BE OPERATED AT VERY LOW LEVEL (0.1 V. MAX. INPUT)

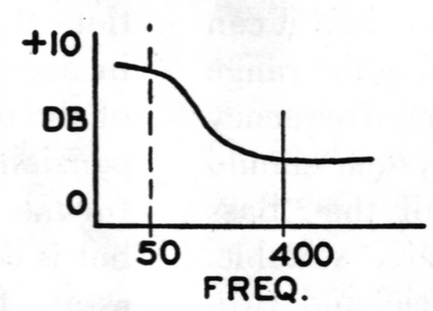

Fig. 15

• *Section* 2

THE MYE TECHNICAL MANUAL

Superheterodyne First Detectors and Oscillators

P.R. MALLORY & CO. Inc.
MALLORY

SUPERHETERODYNE FIRST DETECTORS AND OSCILLATORS

One of the first Superheterodyne Receivers (RCA Radiola 28)

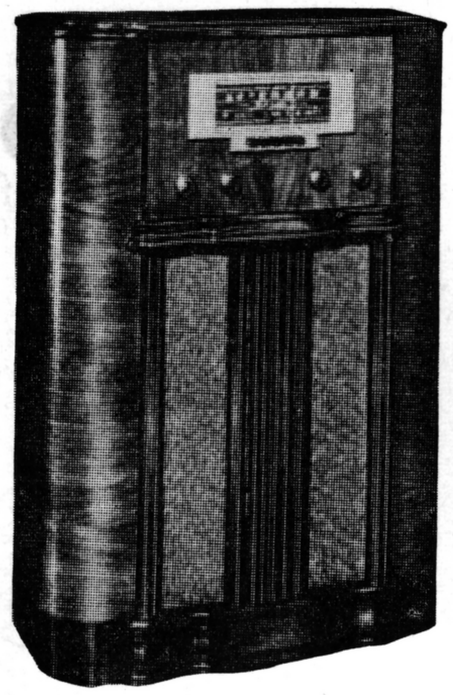

A recent Superheterodyne incorporating modern design practices (RCA 27K)

Introduction

The heart of a superheterodyne is its frequency-changer—the first detector-oscillator system which converts the frequency of any incoming signal to the fixed frequency of an intermediate frequency or long wave R.F. amplifier; where subsequent stages of amplification build up the signal to the desired level.

It is the purpose of this article to review the development of the various circuits which have been used or proposed for this application, to point out the advantages and disadvantages of each, and to give service hints, so that the service engineer or radio repairman can proceed with confidence in making any required adjustment.

Why the Superheterodyne?

Let us begin by briefly explaining the advantages of the seemingly roundabout way employed in superheterodynes for the amplification and selection of radio signals, as compared with the direct method of amplifying the signal at its original frequency (or tuned radio frequency amplification).

The advantages are:

1. Better adjacent channel selectivity
2. Uniform selectivity
3. Better circuit stability
4. Uniform gain at various frequencies
5. Lower cost for equivalent performance

The advantages listed above arise directly from the use of a fixed tuned radio frequency amplifier (I.F.), operating generally, but not necessarily, at a lower frequency or a longer wave-length than the received signal. Precision adjustment for optimum performance is made when the receiver is constructed, and these adjustments will retain their correct setting for extended periods of time. The amplifier constants, such as the inductance of the coils, the coupling of the coils, and the value of the tuning capacitors, have been selected to give the best results at the desired frequency. Physically such an amplifier can be built with great compactness since adjustable compression type mica condensers or small fixed condensers are used for tuning; as compared with the bulky and expensive air dielectric gang tuning condensers required for a tuned radio frequency amplifier.

Even the least expensive superheterodynes usually have a total of five tuned circuits contributing to the selectivity of the receiver—a tuned antenna stage and two tuned circuits in each I.F. transformer. A comparable T.R.F. receiver would have to employ a five-gang variable condenser—a form of construction so expensive as to limit its use to only the most expensive sets. Furthermore, gang condensers are bulky, and require long leads for connections. This, in turn, causes coupling between circuits so that elaborate shielding must be used to provide isolation and to prevent the amplifier from oscillating. Such shielding is obviously costly.

When amplification occurs at signal frequency, the amplifier must be tuned to the signal, and in conventional engineering practice this is accomplished by connecting a variable air dielectric capacitor across each inductance. Thus, the L/C ratio (the ratio of inductance to capacity) varies as the condenser is adjusted for various frequencies, and the selectivity characteristics are not constant with frequency. The changing L/C ratio varies the Q of the circuit. The Q of a circuit is the ratio of inductive reactance to resistance and constitutes a figure of merit for a tuned circuit since the higher the Q, the sharper the tuning. The effect of variable capacity also makes it exceedingly difficult to de-

sign R.F. transformers having uniform gain with frequency, since the gain is a function of the impedance of the tuned circuit, which varies with the Q. Even more difficult is the designing of double-tuned transformers (tuned primary—tuned secondary type) since coupling varies with capacity.

The fixed tuned I.F. amplifier of a superheterodyne is not open to any of these objections.

There is another advantage of the superheterodyne circuit which is inherent to all such receivers using an intermediate frequency lower than the frequency of the received signal, namely—arithmetical selectivity. Radio stations on the broadcast band are located with 10 kc. channel spacing. It is highly desirable for a radio receiver to discriminate against interference from an adjacent channel. The percentage of difference between the frequency of the desired signal and the signal on an adjacent channel varies with the frequency, thus, at 550 kc. the adjacent channels are off-resonance by 1.8%. At 1,000 kc. the difference is 1%, while at 1,500 kc. the difference is only 0.66%.

In a superheterodyne the incoming signal is converted to the frequency of the I.F. amplifier. An adjacent channel station is still removed by 10 kc. at the intermediate frequency. Thus, with a 465 kc. intermediate frequency the percentage difference between the adjacent channels becomes over 2.1%. This percentage difference is constant at any portion of the broadcast band.

In this connection it is interesting to note that the percentage difference increases with lower I.F. frequencies. With a 175 kc. I.F. the adjacent channels are separated by almost 6%, while at 50 kc. (a value used by some manufacturers in the very early days of the industry) the percentage difference is 20%.

However, the problems of images and spurious responses increases rapidly with decreasing I.F. frequency so that the industry has largely standardized on values near 465 kc. The possible presence of such interference constitutes the main objection to the superheterodyne principle, and consequently the subject will be discussed in a later paragraph.

How the First Detector-Oscillator Works

The fundamental operation of the first detector and oscillator is shown by the block diagram, Figure 1. The incoming signal is fed into a vacuum tube, which may be a diode, triode, tetrode, pentode, or one of the more complicated types. The output of a local oscillator is also fed into this tube, where the two inputs are combined to produce the intermediate frequency. By means of special tubes or special circuits it is possible to combine the oscillator and mixer functions in a single tube—however, the fundamental operating principles remain the same.

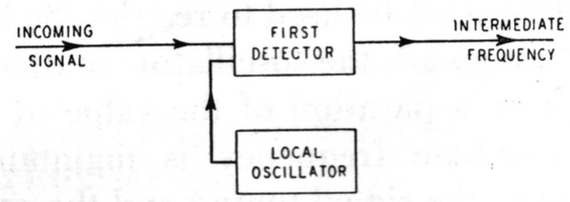

Fig. 1

The local oscillator of a superheterodyne receiver serves two functions. First, it provides a frequency which will combine with the radio-frequency signal and produce, through detection, a new radio frequency wave called the intermediate frequency. For this purpose the local oscillation need only be of the same order of amplitude as the signal.

When the signal and the local oscillator voltages are combined in the same circuit, at a given instant they may be either opposing or aiding one another. If the frequency of the signal and that of the oscillator differ (as is the case in a superheterodyne receiver), then the two voltages will be alternately aiding and opposing each other at a repetition rate equal to the frequency of the new signal voltage. This combining of the two radio-frequency voltages is called heterodyning, or beating. The beat frequency, called the intermediate frequency, is not produced immediately as a result of combining the two radio frequencies. There are still only the original frequencies present but the envelope of the combined wave is varying in amplitude at the beat frequency rate. To create the new intermediate frequency, this wave must pass through a detector.

The second function of the local oscillator is to raise the efficiency of detection. If the incoming signal impressed on the detector is of the order of 1 millivolt and the local oscillator voltage impressed on the detector is of about the same value, the rectified output would be practically zero. The amplitude of the voltage impressed on the detector must be of such a magnitude that the tube characteristic is different for the positive and negative half cycles of oscillation. Increasing the local oscillation voltage beyond the requirements for producing the beat envelope will result in raising the efficiency of rectification. The amount of local oscillation required for most efficient conversion of the radio wave into the intermediate wave is determined by the detector tube design and usually runs between 5 and 15 volts in conventional circuits.

It will be seen from the above discussion that the efficiency of conversion of a heterodyne detector in a superheterodyne receiver does not follow the customary square-law response as does the second detector and that no matter how weak the incoming signal may be, there is no threshold below which the detector fails to operate.

The first detector is operated over a non-linear part of its characteristic. The local oscillation may be supplied from a separate tube and impressed on the grid circuit of the detector through a coupling in its cathode lead, or it may be supplied from other tube elements within the same detector tube. Some of the tube elements may serve the double purpose of both oscillator and detector. In this latter case the local oscillations may not appear in the signal input grid circuit. They will, however, serve their purpose of changing the operating characteristic of the detector by altering the electron flow through the detector part of the tube as the local oscillation swings through its cycle. The detector tube is, in effect, cut off on the negative cycles. This is the condition required for detection. In addition to serving as a detector and sometimes as an oscillator, the first detector tube also acts as an intermediate frequency amplifier since the detection takes place in the grid circuit. The amplification thus obtained is approximately one-half the

value which would be obtained if the tube were used as a conventional intermediate frequency amplifier. This is due to the fact that the local oscillator swings over the low gain part of the tube characteristic on its negative half cycle.

The first detector and the local oscillator of a superheterodyne receiver each perform two important functions: The detector creates and amplifies the intermediate frequency; the oscillator raises the efficiency of detection and combines with the signal to produce the intermediate frequency signal.

The Desired Signal, Images, and Spurious Responses

The Desired Signal

We have stated that the intermediate frequency signal is produced by combining the incoming signal with R.F. energy from a local oscillator. The combining of frequencies for the production of beats or heterodynes follows simple arithmetic in that the two frequencies are simply added or subtracted. However, there are a number of practical considerations which prevent the dismissal of the subject with this brief statement. We believe the matter can be most easily explained by using specific examples.

Let us assume that we have a desired signal of 1,000 kc., and an intermediate frequency of 465 kc. The conventional way of producing the I.F. frequency is by operating the oscillator at a higher frequency than the incoming signal—thus:

Oscillator	— Signal	= Output
1,465 kc.	1,000 kc.	465 kc.

Although the intermediate frequency could be obtained by operating the oscillator at a lower frequency than the signal:

Signal	— Oscillator	= Output
1,000 kc.	535 kc.	465 kc.

The reason the oscillator is not used on the low side for broadcast band reception is that a greater tuning range would be required for the oscillator than for the antenna or R.F. tuning—thus:

Signal	Oscillator	Output
550 kc.	95 kc.	465 kc.
1,500 kc.	1,035 kc.	465 kc.

A tuning range of 95 kc. to 1,035 kc. would be impossible to secure without band switching.

When using the oscillator on the "high side" the tuning range of the oscillator is less than tuning range of the antenna.

Signal	Oscillator	Output
550 kc.	1,015 kc.	465 kc.
1,500 kc.	1,965 kc.	465 kc.

It will be noticed that while the antenna frequency tuning range has a ratio of roughly 3 to 1 between maximum and minimum, the oscillator tuning range is approximately 2 to 1.

To provide the single dial control required of modern receivers, some method must be used to restrict the tuning range of the oscillator so that a uniform separation of the value of the intermediate frequency is maintained between the signal tuning and the oscillator tuning. If a 465 kc. intermediate frequency is used the oscillator tuning must always be 465 kc. removed from the signal. This cannot be accomplished by simply using a smaller coil for the oscillator, the effective tuning capacity must also be reduced. This may be accomplished by connecting a condenser in series with the oscillator section of the tuning condenser to reduce its effective capacity. The series-connected condenser is called the low-frequency pad and its adjustment is, or should be, familiar to all servicemen. Another way of accomplishing the same object is to use a gang condenser in which the oscillator tuning section has specially shaped plates of smaller area than the plates of the variable condenser sections used to tune the antenna and R.F. stages.

It is interesting to note that if the receiver is designed with the oscillator operating at a lower frequency than the signal, the low frequency pad or pads would be placed in the antenna and R.F. sections of the circuit. This unorthodox method of using a "low side" oscillator would prove of advantage in designing an ultra-high frequency receiver, since the oscillator would have greater output and stability when operating at a lower frequency. The difference between the "low side" or lower frequency oscillator operation and "high side" or high frequency oscillator operation amounts to twice the intermediate frequency, and with a 465 kc. I.F. the difference in efficiency would be negligible. However, with a 5 megacycle I.F. the difference in oscillator frequency of 10 mc. between the two methods of operation could result in a considerable improvement in oscillator performance.

Images and Spurious Responses

We approach the subject of "Images and Spurious Responses" with some hesitation, because in this section it is necessary to point out the essential defects of the superheterodyne system. It is difficult to point out how various forms of interference originate within the superheterodyne without appearing to condemn the principle of the receiver. Therefore we wish to state emphatically that the superheterodyne is truly the king of radio receivers, and that while various improvements will undoubtedly occur, the fundamental design will remain. This fact has been recognized for many years.

The difficulty arises in the inability to give a quantitative analysis of the intensity of the various unwanted responses of the circuit as compared with normal interference which originates in the turmoil of our broadcast band.

After all, it must be realized that there are only 95 channels for broadcasting stations in the frequencies lying between 550 kc. and 1,500 kc. and on these 95 channels are located over 600 broadcasting stations. Satisfactory reception can be obtained only on the few clear channels; or from local stations which have sufficient power to over-ride interference originating from perhaps a dozen other broadcasting stations operating on the same wave length. An

unwanted whistle or squeal does little harm when it lands on a channel which at the location of the receiver is unusable anyway; so that most of the effects to be described will never be noticed by the average listener.

So far, we have been discussing the desired signal. However, many signals other than the desired signal reach the first detector, since the selectivity of the usual input circuits of the average receiver is anything but perfect. Signals from the adjacent channels are rejected by the selectivity of the intermediate frequency amplifier. However, there are numerous signals and combinations of signals that can produce heterodynes which will pass through the I.F. amplifier. These spurious responses can cause annoying interference, and a short resumé of their causes is of interest.

Images

Let us revert to the specific example used previously. Assume we have a standard superheterodyne receiving a 1,000 kc. signal, and using a 465 kc. I.F. Then the normal operation of the receiver is:

Oscillator	—	Signal	=	I.F.
1,465 kc.		1,000 kc.		465 kc.

However, if a nearby station is operating at 1,930 kc. with sufficient intensity to produce an appreciable signal on the first detector grid, the resulting signal will be passed by the I.F. Thus:

Undesired Signal	—	Oscillator	=	I.F.
1,930 kc.		1,465 kc.		465 kc.

The image is simply the "low side" oscillator response, and the image is always removed from the desired signal by twice the value of the intermediate frequency.

A corollary of this is that the higher the intermediate frequency, the farther the image is removed from the desired signal. Naturally, the farther the image is displaced from the signal, the easier the problem of preselection. With receivers using the old standard 175 kc. I.F., the image response to frequencies between 550 kc. and 1,250 kc. was in the broadcast band (900 kc. to 1,600 kc.), so that the possibility of spurious response and interference is considerable. This is the reason why 175 kc. has been largely dropped by the industry; and why the better class of receivers that employ this I.F. frequency will be found to use two, three, or even four tuned circuits before the first detector. With 456 and 465 kc. I.F. amplifiers the image (except for a few channels) falls outside the broadcast band; furthermore the percentage of difference between the frequency of the desired signal and the image becomes so large that the rejection of a single tuned circuit, such as a tuned antenna stage, becomes adequate for ordinary household reception. The mathematical ratio of the response of a receiver to a wanted signal, as compared to the response to the image, is frequently called the image ratio, and the greater the ratio, the better the receiver.

Spurious Responses from Harmonics

The strength of the harmonics emitted by modern transmitters is very small in comparison with the power of the fundamental wave, and in most instances the actual harmonics cause little interference. The regulations of the Federal Communications Commission take care of this. However, strong harmonics of a signal may be generated in the first detector tube; and the effect will be exactly the same as if the harmonics originated at the transmitter, except that the locally generated harmonics will be present only on the stronger signals.

The production of harmonics by the first detector generally occurs by reason of grid rectification, the incoming signal having sufficient amplitude to override the grid bias. This effect and its cure is described on page 10. It is the purpose of this section to point out the spurious responses which may result from the harmonics. Thus the second harmonic of a 1,000 kc. signal would be 2,000 kc.; and if the harmonic possessed a reasonable intensity it could be picked up when the receiver was tuned to that frequency. In this example, little harm would result to the broadcast listener since 2,000 kc. is outside of the broadcast band. However, second harmonics of stations from 550 to 800 kc. fall in the broadcast band in frequencies from 1,100 kc. to 1,600 kc. As an example, the harmonic of a 700 kc. station could spoil reception from a 1,400 kc. station—the effect would be the same as two stations on the 1,400 kc. channel.

Third, and higher harmonics are occasionally encountered in high frequency reception—their intensity is usually considerably less than the intensity of the second harmonic, but their presence may fool the listener into believing that he is listening to a distant short-wave station, when the signal actually is originating in a local transmitter.

If the harmonics originate at the transmitter, the harmonics are actual radiated waves and they will be picked up by any receiver of adequate sensitivity, regardless of its design. The effect of generating the harmonics at the receiver is more pronounced in the first detector of a superheterodyne than in other types of radio circuits. Proper circuit design, including the use of preselection, provides a satisfactory answer to the problem. A modern short wave receiver with one or two stages of tuned R.F. amplification before the first detector rarely shows this defect.

Oscillator Harmonics

The oscillator of a superheterodyne can, and usually does generate an abundance of harmonics. In fact, this effect was deliberately used in the early Radiola 2nd Harmonic Superheterodynes, in which the fundamental frequency of the oscillator was one-half the desired frequency. The purpose was to prevent interlock because the low intermediate frequency employed would normally place the resonant points of the oscillator and the detector input coils very close together. The second and higher harmonics of the oscillator are capable of beating with an incoming signal, and if the difference in frequency between the two equals the intermediate frequency the resultant output will pass through the I.F. amplifier. As specific examples:

		Desired		
Oscillator	—	Signal	=	I.F.
1,465 kc.		1,000 kc.		465 kc.

2nd Harmonic of 1,465 kc.=2,930

kc. This 2,930 kc. oscillator input can beat either of two frequencies to the I.F. frequency:

2,930 kc. — 2,465 kc. = 465 kc.
3,395 kc. — 2,930 kc. = 465 kc.

3rd Harmonic of 1,465 kc. =4,395 kc.
4,395 kc. — 3,930 kc. = 465 kc.
4,860 kc. — 4,395 kc. = 465 kc.

These examples will explain why a short-wave station will occasionally be tuned in on the broadcast band. The input of such a station will be greatly attenuated because the frequency is far removed from the resonant frequency of the detector grid tank (input tuning circuit), so that the effect is generally limited to very close stations. Many radio amateurs are blamed for spoiling broadcast reception when the real trouble lies in the fact that the broadcast receiver does not have adequate preselection. Adequate preselection, plus reasonable shielding of exposed grid wires will eliminate the trouble, or at least reduce the trouble to a negligible value.

Harmonics Beating Harmonics

Although seldom actually causing trouble in receivers of modern design using the higher intermediate frequencies and modern mixer tubes, it is perfectly possible for the harmonic of a station carrier to beat with the harmonic of the oscillator to a value which will be passed by the intermediate frequency amplifier. Because both harmonics will have less amplitude than the fundamental frequencies, such responses are generally quite weak.

For those who are interested in a pastime let us suggest that instead of working a cross-word puzzle, the reader try figuring all the various combinations and permutations by which an oscillator and its harmonics can beat on a signal and its harmonics to produce a signal at intermediate frequency. The practical value of such calculation is doubtful, because the higher the order of the harmonic the weaker the amplitude, but the number of such combinations is amazing, and the reader will be assured of a full evening of entertainment.

Heterodynes Between Stations

There is a very good reason why the even numbered intermediate frequencies of 450, 460, 470, etc. are not generally used in broadcast receivers. Broadcasting stations are located in 10 kc. channels—and if two signals differing from each other in frequency by the value of the intermediate frequency enter the first detector, they will beat with each other to produce a third signal of I.F. value. The result would be a continuous background jumble of the two stations, regardless of where the receiver was tuned. Odd numbered intermediate frequencies are used, such as 465 kc., 456 kc., etc., since broadcasting stations are never spaced by such an odd interval. Here is one of the strongest arguments to the serviceman that his test oscillator should be accurate, since a discrepancy of 4 or 5 kc. will align a receiver so as to be susceptible to interference from inter-station heterodynes. Another point—an intermediate frequency amplifier does not accept a single frequency—it accepts a band of frequencies. Also, while the unmodulated carrier has, or should have a single frequency, the modulated carrier with its side bands may occupy the full 10 kc. allotted channel. Consequently, in locations where the receiver is very close to two powerful broadcasting stations separated by an interval approximating the I.F. frequency, say 460 kc. or 470 kc. with a 465 kc. I.F., a jumble of the two stations may be heard all over the dial. Assuming that the antenna is of reasonable length, and assuming that the receiver is properly aligned, there is still one remedy left to the serviceman. Simply realign the intermediate frequency a few kc. higher or lower than the specified value. In the example given above, realignment at 475 kc. or 455 kc. will probably cure the trouble, and there is sufficient range in the trimmers of most I.F. transformers to permit this. Realignment of the I.F. will also call for readjustment of the gang condenser trimmers and low frequency pad. After realignment the dial scale may be slightly "off" but this can not be avoided, and is a small price to pay for the elimination of the interference.

Overall Feed-back

There is one curious form of interference which is fairly common in receivers using a 175 kc. intermediate frequency, and that is the inability to receive stations on 700 kc., 1,050 kc., and 1,400 kc. without a strong whistle being heard. This whistle has been found to originate through overall feed-back. Some of the R.F. energy at 175 kc. frequency passes from the second detector through the output system of the set and is picked up by the input. The fourth harmonic of 175 kc. is 700 kc.; the sixth harmonic is 1,050 kc.; and the eighth is 1,400 kc. If this disturbance suddenly appears in a receiver which has previously been free from the trouble, one should immediately suspect the failure of the R.F. bypass condenser connected to the plate of the second detector tube, the opening of the ground lead between the receiver chassis and the loud-speaker, or the failure of other R.F. bypass condensers which may be connected in the plate or grid circuits of the audio system. If the trouble seems inherent to the receiver, and if reception of the three frequencies listed is important, a very slight retuning of the I.F. transformers will shift the interference to adjacent channels. A 465 kc. I.F. can cause trouble at only one point in the broadcast band through overall feed-back—930 kc.

Direct Interference at I.F. Frequencies

It is apparent that if the signal of a transmitter operating at or near the intermediate frequency appears on the grid of the first detector, this signal will be passed and amplified by the receiver. Fortunately there are not many transmitters operating on the common intermediate frequencies. Efforts are being made to reserve a channel from which all long wave transmitters are barred to totally eliminate such interference. However, this reservation has not been secured as yet and there are some locations where the interference is annoying. Airport "A-N" beacons are the chief offenders for 262 kc. I.F. With higher frequency I.F., interference may be experienced from low frequency tele-

graph transmitters. The remedy is to install a wave trap in the antenna circuit of the receiver. Alignment of the wave trap can be accomplished by feeding the output of a signal generator through a dummy antenna to the antenna and ground binding posts of the receiver. The signal generator is adjusted to the intermediate frequency and then the trimmer of the wave trap is adjusted for *minimum* output of the receiver.

The second harmonic of a long wave station (actual, or generated in the first detector of the receiver) may fall in the band accepted by the I.F. amplifier and thus cause interference.

Direct interference can also be eliminated by realigning the I.F. amplifier to a different frequency.

Oscillator Performance in Superheterodynes

Theory

The optimum performance of a superheterodyne receiver depends to a large extent upon the correct adjustment and alignment of the local oscillator used to heterodyne the incoming signal to the frequency of the intermediate amplifier. The frequency range, tracking, stability, and amplitude of the oscillations must meet rather exacting requirements if maximum performance in the receiver is to be realized.

During the past thirteen years of superheterodyne design and development more than one hundred different oscillator-detector combinations have been employed. A review of the circuits more widely used and a consideration of the service problems common to them should be of much help to servicemen. These circuits appear to differ greatly from each other, whereas actually they have many electrical characteristics in common and can all be traced back to the five basic oscillator circuits shown in Figure 2.

Five Basic Circuits Used

The Hartley oscillator circuit shown in Figure 2A is not in common use in superheterodyne receivers, but is very popular in commercial and amateur transmitters. Much used variations of this circuit are the grid tuned oscillator of Figure 2B and the plate tuned oscillator of Figure 2C. Radio amateurs will recognize in Figure 2C the circuit of the T.N.T. oscillator (if plate and grid coils are not inductively coupled, and if the grid coil is broadly resonant to part of the plate circuit tuning range). The Meissner circuit of Figure 2D may be considered a tuned circuit with two tickler coils. The fourth variation of the Hartley oscillator is shown in Figure 2E.

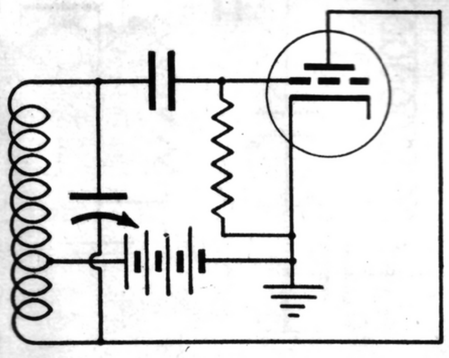

HARTLEY

Fig. 2A

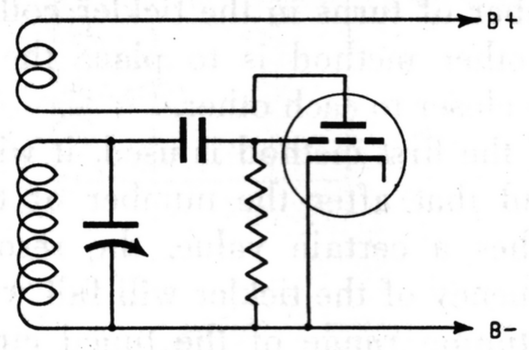

GRID TUNED OSCILLATOR

Fig. 2B

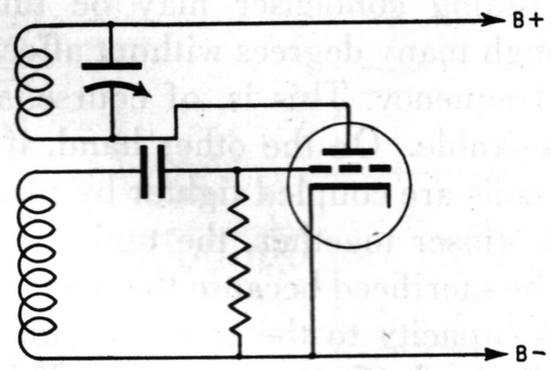

PLATE TUNED OSCILLATOR

Fig. 2C

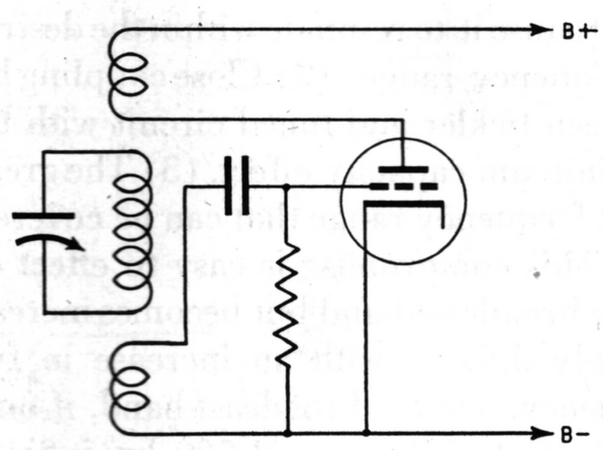

MEISSNER

Fig. 2D

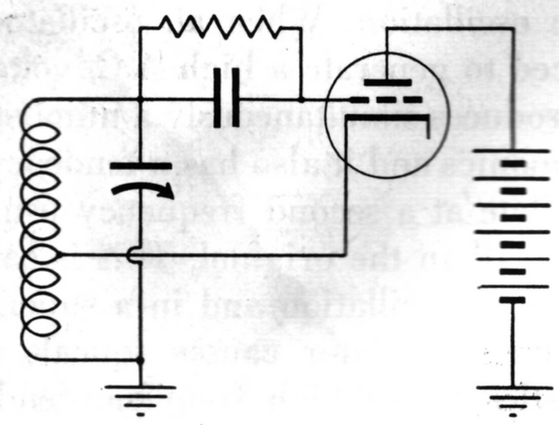

MODIFIED HARTLEY

Fig. 2E

This circuit is substantially the same as Figure 2A except the ground point has been changed from the cathode to the junction of the coil and the rotor of the tuning condenser. There are several advantages to this change. First, the rotor of the condenser is at ground R.F. potential, which permits the employment of a bath-tub type gang condenser for tuning. In this form of construction the rotors of the various gang sections are common and grounded.

The second point is that the grid condenser is no longer required to prevent plate voltage from being applied to the grid of the oscillator. The D.C. voltage across this condenser now consists solely of the D.C. bias voltage developed through grid rectification and consequently a condenser with comparatively little insulation will be satisfactory in the application. B+ is applied directly to the plate (or oscillator anode) of the tube, and this potential does not appear in the tuning capacitor. This last type of circuit is used in the new single-ended pentagrid converters, types 6SA7 and 12SA7.

It is obvious that this circuit can only be used conveniently with tubes having indirectly heated cathodes which are insulated from the heater circuit. Filamentary cathodes require R.F. chokes in the heater supply circuit so that the cathode may be "off ground" at R.F. potentials.

Colpitts Oscillator

The Colpitts circuit (Fig. 2F) differs from the Hartley in one important respect—the division of the circuit is made by tapping the capacitance rather than by tapping the inductance.

In a Hartley circuit the separation of the plate and grid circuits is obtained either by tapping the coil, or by using separate grid and plate coils in an inductive relationship. In a Colpitts circuit the effect of a tapped condenser is obtained by connecting two condensers in series.

The Colpitts circuit is frequently used in push button tuning circuits employing permeability tuning, and is also used for the long wave "weather" band of some receivers.

Combination Colpitts and Tickler Oscillator

Figure 2G shows a combination circuit employing both tickler and capacitive feed-back. This circuit has several important advantages. By proper selection of constants the oscillator output can be made quite uniform with frequency. Because of the capacitive feed-back, the number of tickler turns can be kept quite small, so that trouble from tickler resonance is avoided.

In the circuit illustrated the oscillator low frequency pad C_p serves also as the feed-back condenser.

Tuned Circuits and Oscillations

In each of these circuits a tuned circuit consisting of an inductance and variable capacitor determines the frequency at which the circuit will oscillate. This tuned circuit may be in the grid circuit, the plate circuit, or in a separate circuit coupled to the grid and plate circuits. It is essential that some method be used that will couple part of the developed A.C. voltage on the plate back to the grid circuit. In each of five of the circuits shown in Figure 2, this is done inductively. It is only necessary that the tickler coil be connected in the right way and sufficient coupling be supplied to make the tube oscillate. Whether or not the circuit will oscillate during a complete rotation of the tuning condenser, however, is another matter, and one that is controlled almost entirely by the coupling between plate and grid coils. In almost every oscillator circuit the developed voltage will be greatest near the high frequency end and will decrease as the frequency is decreased. If sufficient feed-back is not provided, the tube will stop oscillating before it reaches the low frequency end of the tuning range. It is very necessary to have enough feed-back, especially in the new all-wave receivers, in which, for economic reasons, it is necessary to cover the greatest frequency range with the fewest coils. There are two ways in which greater coupling can be secured between two coils. One method is to increase the number of turns in the tickler coil and the other method is to place the two coils closer to each other.

If the first method is used, it will be found that after the number of turns reaches a certain value, the resonant frequency of the tickler will fall within the tuning range of the tuned circuit. This will result in the frequency of oscillation being controlled by the tickler instead of by the tuned circuit, and the tuning condenser may be turned through many degrees without affecting the frequency. This is, of course, very undesirable. On the other hand, if the two coils are coupled tighter by placing them closer together, the tuning range will be sacrificed because the tickler coil adds capacity to the tuned circuit and this limits the frequency range. This indicates that a compromise must be effected to secure: (1) The maximum number of turns on the tickler that will not cause it to resonate within the desired frequency range. (2) Close coupling between tickler and tuned circuit with the minimum capacity effect. (3) The greatest frequency range that can be covered.

This compromise is easy to effect on the broadcast band but becomes increasingly difficult with an increase in frequency. On the broadcast band, if only the range 550 kc. to 1,500 kc. is to be covered we cannot increase the coupling too much or another undesirable trouble is encountered—that of parasitic oscillation. When an oscillator is forced to generate a high A.C. voltage, it produces simultaneously a number of harmonics and it also has a tendency to oscillate at a second frequency usually higher than the original. This is called parasitic oscillation and in a superheterodyne oscillator causes squeals and whistles at the high frequency end of the band. Too great a coupling between plate and grid coils in an oscillator

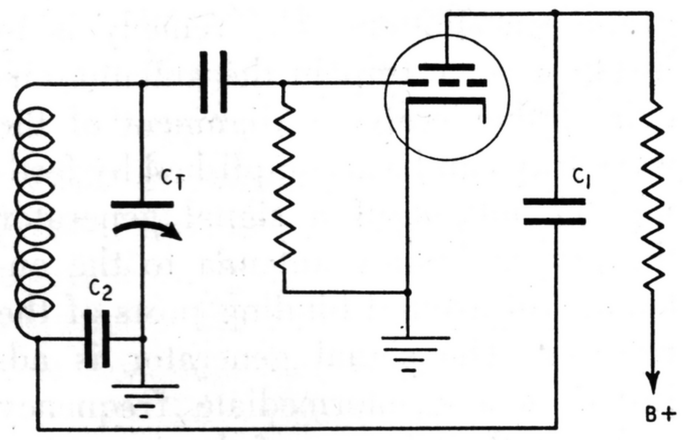

COLPITTS OSCILLATOR
FIG. 2F

causes parasitic oscillation on the high frequency end, and too loose a coupling may result in the oscillator stopping at the low frequency end of the band. Somewhere between these two conditions will be found the proper degree of coupling. In service work, some sets will be found where the coupling is at a critical point so that a matched oscillator tube will work, but one that is on the low side of the mutual conductance limit will stop oscillating somewhere near the low frequency end of the band.

The Grid Leak and Condenser

The function of the grid condenser and leak common to all seven circuits shown in Figure 2 may not be apparent at first glance. These two necessary items are used to secure an automatic grid bias for the oscillator tube.

With the grid connected to the cathode by the grid leak, the bias on the grid is of course zero when the tube is not oscillating. A tube so operated is very sensitive to any circuit change and is very unstable. With a positive voltage applied to the plate and the heater current turned on, the first surge of electrons from the cathode to the plate will cause the tube to start regenerating and within a few cycles this will build up sufficient feed-back voltage to cause the

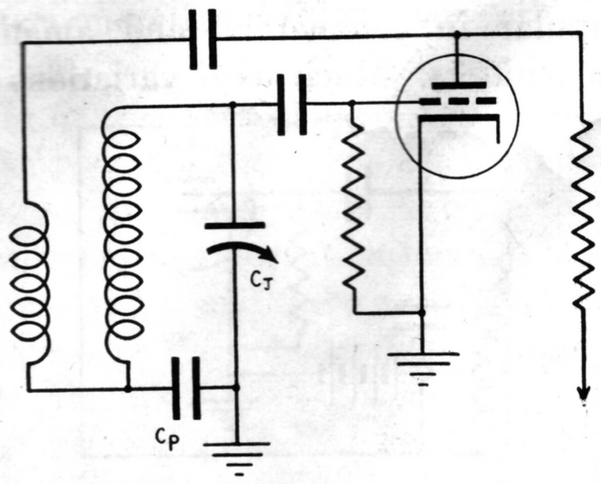

COMBINATION COLPITTS & TICKLER OSCILLATOR
FIG. 2G

tube to oscillate. With the tube oscillating, the voltage feed-back from the plate circuit will alternately make the grid positive, then negative. When the grid goes positive, it will act as a diode plate and attract some of the electrons that would otherwise go to the plate, and these electrons flowing through the grid leak will develop a voltage that will bias the grid negative. If the grid condenser and leak are of the proper value to prevent all of these electrons from leaving the grid during the negative cycle, the grid will maintain this bias as long as the tube is oscillating. This effect can be shown in two ways—first by connecting a 0-1 milliammeter in series with the grid leak and, second, by connecting a milliammeter in series with the plate return circuit. When the tube is not oscillating, the plate current will be higher than when it is oscillating. The use of a meter in series with the grid leak gives a very good indication of the actual voltage developed by the oscillator. It is only necessary to multiply the grid leak resistance in ohms by the grid current to determine this voltage. Since the voltage developed by an oscillator is proportional to the coupling, this grid current measurement gives a good test for determining the condition of coupling which, we have seen, is very important. This current is larger than would be supposed because when the grid is positive, the plate voltage is at minimum and the grid attracts a relatively large percentage of the electrons. Since the translation gain of the first detector oscillator combination is a function of the oscillator voltage, it is very important that this developed voltage be of satisfactory amplitude.

Engineering and Service

It is apparent from the foregoing discussion that an oscillator circuit that will cover the desired frequency band with a satisfactory developed oscillator voltage so as to give good translation gain and yet not cause parasitic oscillation trouble at the high frequency end of the band, is one that has been very well engineered and one that must be intelligently adjusted in the field, if satisfactory receiver operation is to be maintained.

Coupling Between Oscillator and First Detector

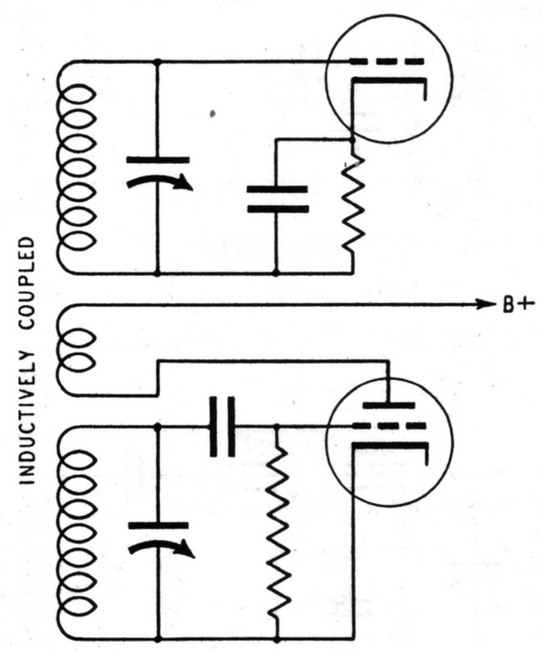

FIG. 3A

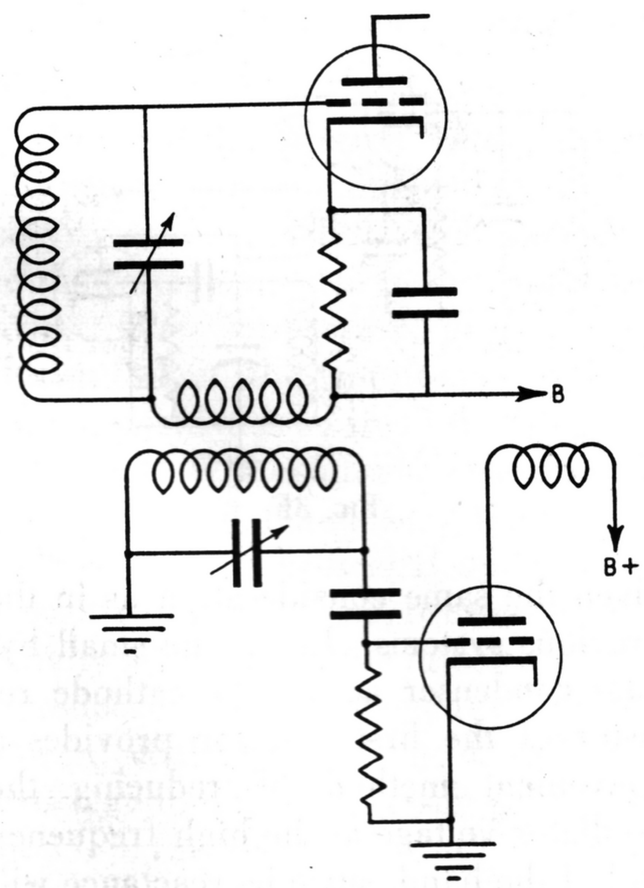

FIG. 3B

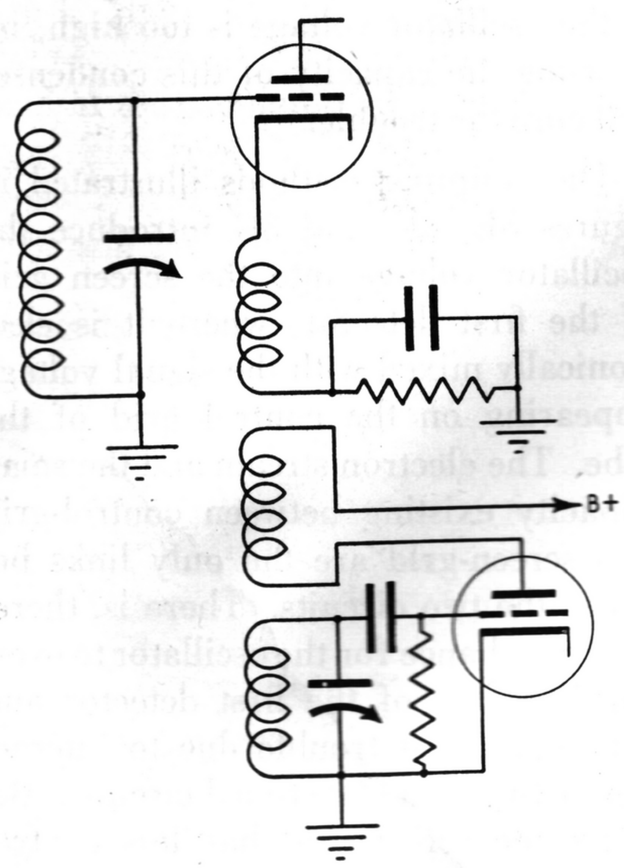

FIG. 3C

The first commercial superheterodyne receivers employed triode tubes throughout and were, of course, battery operated. These early sets are now between ten and fifteen years old, and if they have not already been, should be retired in favor of newer and much better sets. We will therefore ignore these early receivers and consider only screen grid type receivers.

To secure an intermediate frequency in the plate circuit of the first detector, the voltage from the local oscillator is beat against the incoming signal in the control grid, cathode, or screen grid circuit of the first detector. Five general methods of coupling the first detector with a separate oscillator tube have been used. These are:

1. Inductive coupling of the oscillator coil to the first detector grid coil, as illustrated in figure 3A.
2. Inductive coupling of the oscillator coil to a separate coil connected in the grid return circuit of the first detector, as illustrated in figure 3B.
3. Inductive coupling of the oscillator coil to a coil in series with the first detector cathode circuit, or by capacity coupling between oscillator cathode and first detector cathode, as illustrated in figures 3C and 3D.
4. Electron coupling by introducing the oscillator voltage in the first detector screen-grid circuit by conductive, inductive, or capacitive coupling as illustrated in figures 3E, 3F, and 3G.
5. Electron coupling by introducing the oscillator voltage into the first detector by using a tube having an additional grid structure, such as the suppressor grid of an R.F. pentode; or the oscillator grid of a 6L7, as illustrated in Figure 3J.

The first two systems (1 and 2 above) introduce the oscillator voltage into the control grid circuit of the first detector and require either a relatively weak oscillator voltage or very loose coupling between the oscillator and first detector control-grid coils. The second method is the more satisfactory of the two although too close a coupling between these two coils may cause the tuning of one circuit to affect the tuning of the other circuit. This type of interaction is very undesirable, and in ex-

treme cases causes the two circuits to "lock" together, making proper trimming and tracking very difficult.

Assuming that the oscillator and first detector coupling is satisfactory from a non-interaction standpoint, there is still one other source of trouble to consider. This is the possibility that the oscillator voltage may be so high (or the first detector grid bias so low) that it will drive the control grid of the first detector positive. This usually occurs at the high frequency end of the band, where in most cases the oscillator develops its maximum voltage. When the second detector control grid is driven positive, grid current flows in the grid circuit and the sensitivity of the R.F. stage as well as that of the first detector is seriously reduced. If this condition is suspected it can be easily checked by connecting a 0-1 milliammeter in series with the first detector grid coil (between the low potential end of the coil and ground) and rotating the tuning condenser through its entire tuning range. If at any time the meter needle moves, the first detector bias should be increased or the oscillator voltage reduced. The oscillator voltage may be reduced by reducing the coupling between first detector and oscillator coils, by reducing the coupling between the two oscillator coils, by reducing the plate voltage of the oscillator, or by reducing the grid leak or condenser—or both—of the oscillator. To maintain the oscillator developed voltage at a more constant level in many sets a fixed resistor is connected in series with the oscillator grid as shown in figure 3H.

A vacuum tube voltmeter may be used to measure the value of the oscillator voltage induced in the control-grid circuit of the first detector. If the vacuum tube voltmeter is calibrated in R.M.S. volts, the oscillator voltage measured must be multiplied by 1.4 to find the peak voltage. This peak voltage should never equal the bias voltage of the first detector.

The third system of inductive coupling, in which the oscillator voltage is induced into the cathode of the first detector (illustrated in figures 3C and 3D), gives less trouble due to interaction between the first detector tuned circuit and the oscillator tuned circuit, but the balance between first detector bias and maximum oscillator voltage must be

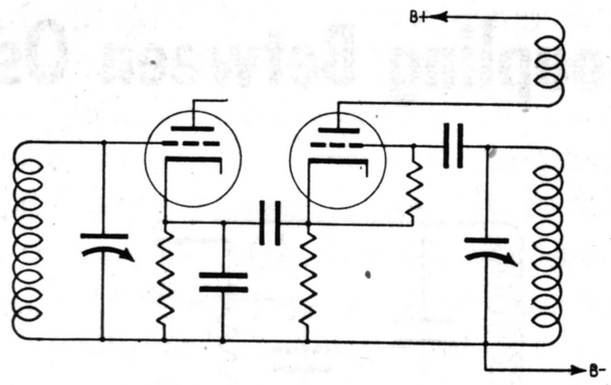

Fig. 3D

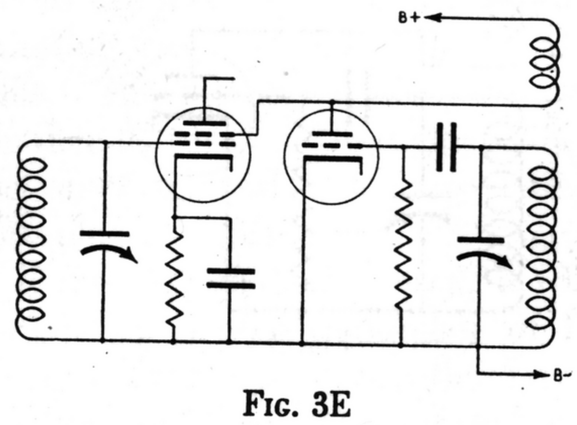

Fig. 3E

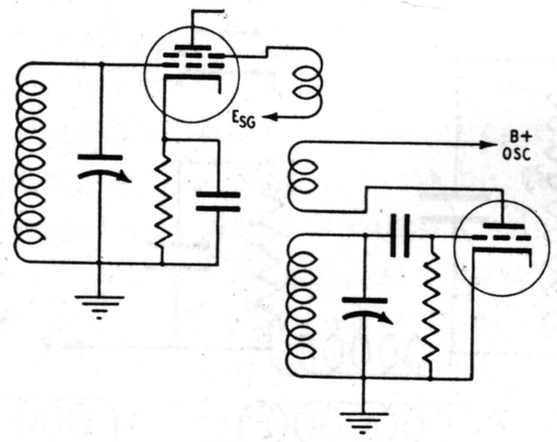

Fig. 3F

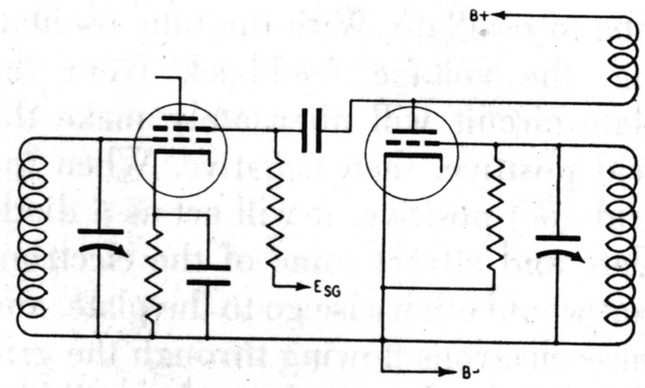

Fig. 3G

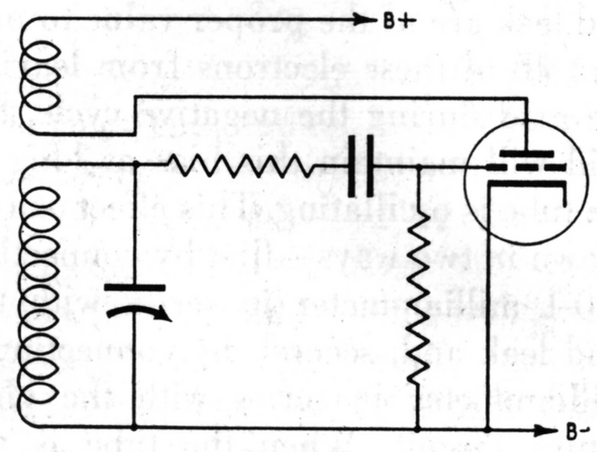

Fig. 3H

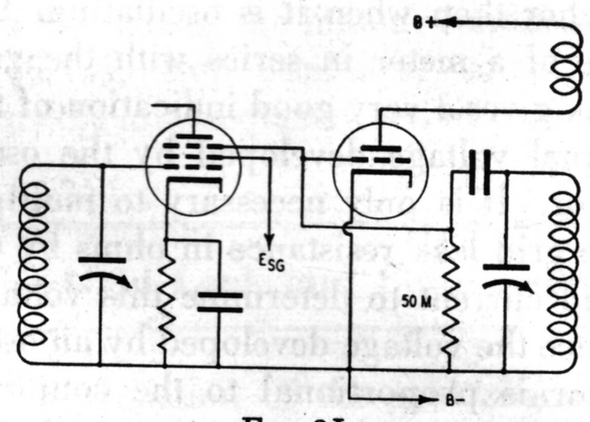

Fig. 3J

given the same consideration as in the previous systems. In 3D the small bypass condenser across the cathode resistor of the first detector provides a convenient method of reducing the oscillator voltage at the high frequency end of the band, since its reactance will be lower at high frequencies where the oscillator voltage is usually greatest. If the oscillator voltage is too high, increasing the capacity of this condenser will cure the trouble.

The coupling methods illustrated in figures 3E, 3F, and 3G introduce the oscillator voltage into the screen grid of the first detector, where it is electronically mixed with the signal voltage appearing on the control grid of the tube. The electron stream and the small capacity existing between control-grid and screen-grid are the only links between the two circuits. There is, therefore, no chance for the oscillator to override the bias of the first detector and very much less trouble due to interaction between the two tuned circuits. Because the screen-grid has less control over the electron stream than the control grid, the oscillator voltage applied to it must be greater to give the same translation gain in the first detector. For this reason, assuming the same oscillator coils in each case, circuit 3E may not give as good results as circuit 3F and 3G in which the oscillator plate voltage can be higher than the first detector screen-grid voltage, and as a consequence develop a higher oscillator voltage. Circuit 3F is not as economical to produce as types 3E and 3G because of the three coil feature, and for the same reason will give more trouble in the field due to difficulty of maintaining proper coupling between the three coils.

Electron Coupling with Suppressor Grid Injection

With R.F. pentode tubes having the suppressor grid connection brought out to a separate base pin, good operating results can be obtained by injecting the oscillator voltage in the suppressor grid rather than in the cathode circuit as has

been described. The suppressor control of the plate current is as complete as that of the control grid under proper conditions, provided that enough control voltage is used. The above statement may be clarified somewhat by saying that if the control grid is held at any fixed potential, the plate current may be varied between cutoff and the value corresponding to zero suppressor grid bias.

SUPPRESSOR GRID PLATE CHARACTERISTICS
TYPE 78 TUBE

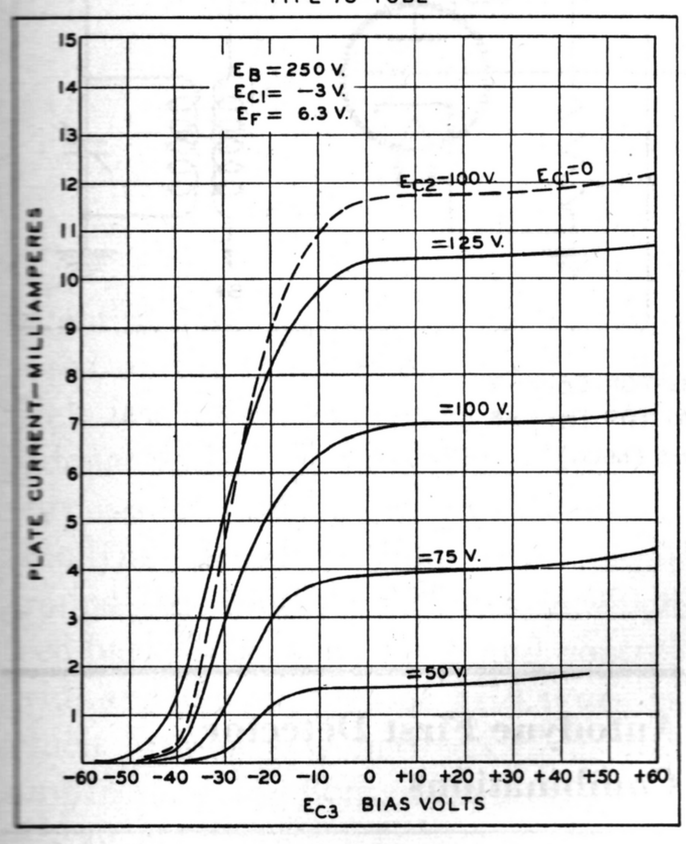

FIG. 4

For example, Figure 4 shows the variations of I_p of a 78 tube with the suppressor grid voltage. If the suppressor grid is made negative enough, the plate current is cut off for any of the screen and control grid voltages. The principal control effect of the suppressor grid occurs in a range of –15 volts to –40 volts suppressor grid bias, and at more positive values the suppressor grid has comparatively little control on the plate current flow. The curves are all for —3 volts on the control grid except the dotted curve which is for zero potential.

Some discussion of the suppressor grid control characteristic is in order. No specifications for the suppressor grid control on the plate current have been published or standardized. A wide range of turns per inch on the suppressor grid may be found in various makes of tubes. This wide range is permissible from the standpoint of the rated characteristics given with the suppressor grid at zero potential, and no serious trouble has resulted even in the case of combined oscillator-detector service.

The plate resistance is reduced when the suppressor grid potential is made negative. The suppressor grid potential varies over wide limits however, so that the average plate resistance is much higher than the low values that would be measured for a negative suppressor grid with small signal.

Provided the injected voltage is kept above a certain minimum value, the sensitivity varies but little with variations of the voltage injected in the suppressor grid. The suppressor grid current drawn when the suppressor grid is swung positive is so small that it can be neglected. With cathode injection, on the other hand, the value of the injected voltage is quite critical if optimum results are to be obtained, because the sensitivity is reduced if the injected voltage is reduced, and grid current is drawn if the injected voltage is too high. From this standpoint, suppressor grid injection is to favored.

A separate bias source was used in making the measurements shown in figure 4. There is no reason, however, that the suppressor could not be tied to the grid of the oscillator tube and the oscillator bias furnish the bias on the suppressor grid also. A 20,000 ohm grid leak will give between 50 and 60 percent rectification efficiency, say 55 percent. A value of 35 volts D.C. bias would thus be suitable for both injection and D.C. bias. A resistor of 50,000 ohms could be used also and the proper oscillator strength could be found directly from the data given, as the rectification efficiency for 50,000 ohms is about 70 percent so that the R.M.S. values of injected voltage are the same as the rectified voltage. No trouble would be had in obtaining this voltage from a separate oscillator. Figure 3J shows a typical circuit diagram.

RELATIVE POSITION OF ELECTRODES OF THE 6L7

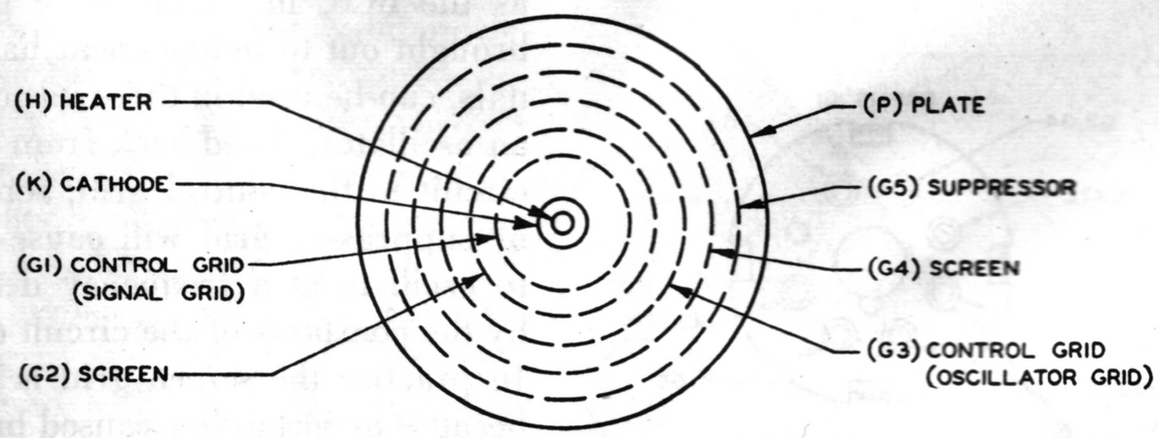

FIG. 5

The 6L7 Mixer Tube

From the preceding data it will be seen that there are both advantages and disadvantages when using suppressor injection of oscillator voltage.

The advantages are:

1. Freedom of coupling between the R.F. and oscillator tuning circuits, which prevents any tendency toward "pulling" or "locking-in" of the oscillator.

2. The value of the injected voltage is comparatively non-critical, as long as there is enough of it. There is no danger of excessive oscillator input causing the control grid to go positive, causing the flow of grid current with its attendant evils.

The principal disadvantages of using an R.F. pentode tube with suppressor injection are:

1. The oscillator must develop a comparatively high output if complete modulation of the signal is to be secured.

2. A negative bias on the suppressor grid of an R.F. pentode greatly lowers the R.F. plate impedance, which is harmful to selectivity.

These effects have prevented the suppressor injection methods from achieving wide popularity. However, by modifying the construction of the detector tube, these defects can be eliminated. The modification would consist of increasing the amplifying action of the suppressor grid; and the addition of a screen between the suppressor and the plate will maintain the plate resistance at a satisfactory value. A further refinement may be made by inserting a grounded suppressor between plate and

oscillator screen. This hypothetical tube, which is substantially the new 6L7, thus requires five grids for good mixing at high radio frequencies.

Figure 5 shows the relative positions of the elements of the 6L7. The tube consists, as may be seen, of a heater, a cathode, five concentric grids, and a plate. Grid No. 1, which is nearest the cathode, is one of the two control grids. It is of the remote cut-off type and, because the R.F. signal to be converted is applied between it and cathode as shown in Figure 6, it may be referred to as the signal grid. The remote cut-off characteristic of this grid minimizes R.F. distortion and cross-modulation effects when its bias is under the control of the A.V.C. system. Grid No. 2 serves the same purpose as the screen in a conventional tetrode; it accelerates the electrons toward the plate and reduces the G_1-G_3 capacitance to a small value. (The numerical subscript denotes the grid number.) Grid No. 3, interposed between screens G_2 and G_4, is the second control grid of the tube and has a sharp cut-off characteristic. This grid may be referred to as the oscillator grid, because the output of the external oscillator is connected to it. Grid No. 4 is another screen; it increases the plate resistance of the tube, reduces the G_3-P capacitance, and functions similarly to the screen in a conventional tetrode. G_2 and G_4 are connected together internally and serve to limit the effects of secondary emission from the plate. Because of the suppressor, it is possible to operate the tube at low plate voltages. Figures 7 and 8 show typical radio receiver circuits using the 6L7 tube.

TYPICAL OSCILLATOR-COUPLING CIRCUITS FOR THE 6L7

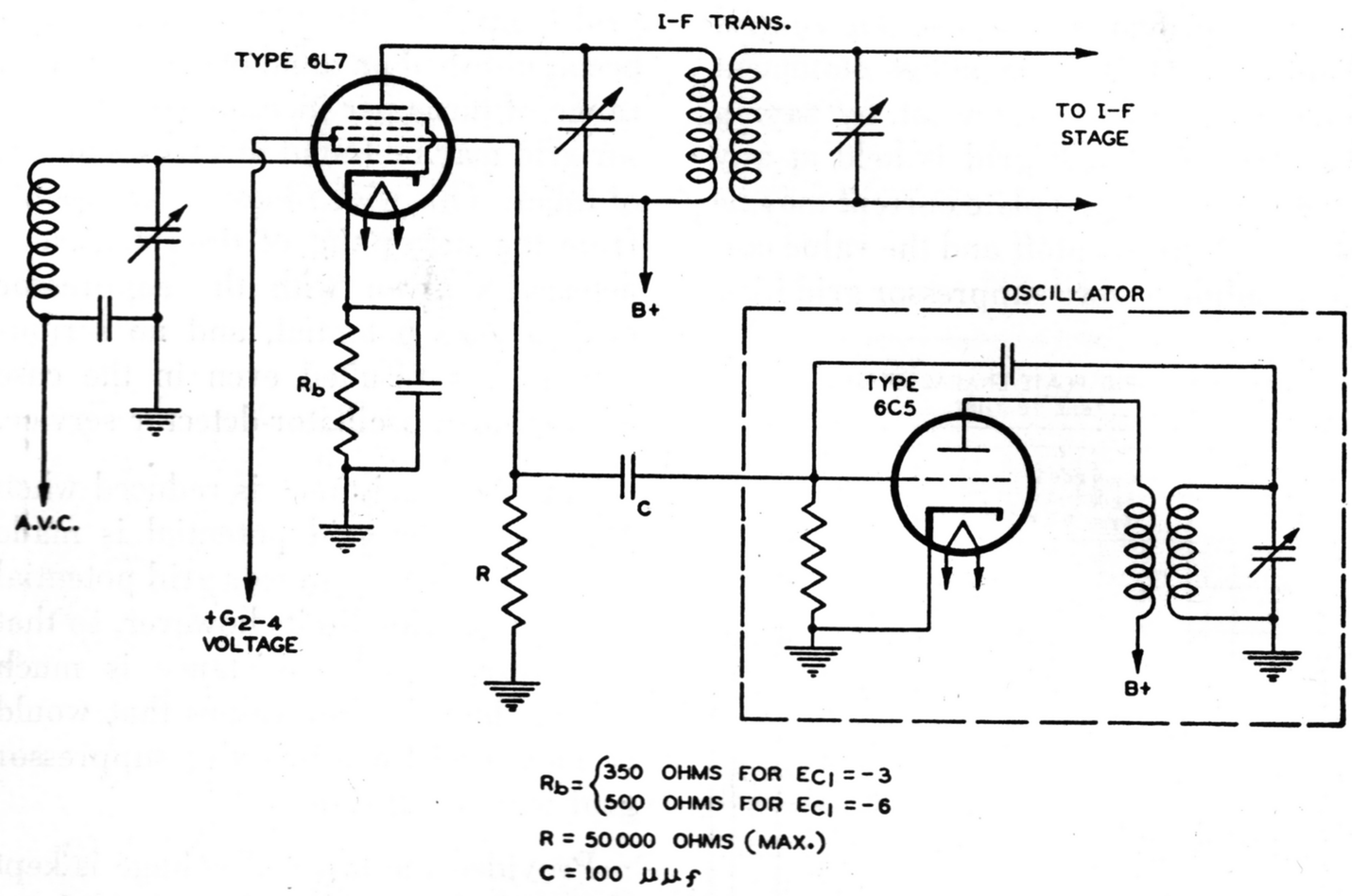

FIG. 7

The 6J8G Converter Tube

The 6J8G construction is identical to that of the 6L7 except that it has an additional triode section mounted at the bottom of the common cathode. This triode section is used as the oscillator. The No. 1 grid of the triode is tied internally to the No. 3 grid of the heptode. The combining of the two tubes in one envelope results in a cost saving in radio receiver construction.

CONNECTIONS OF THE 6L7 AS A MIXER

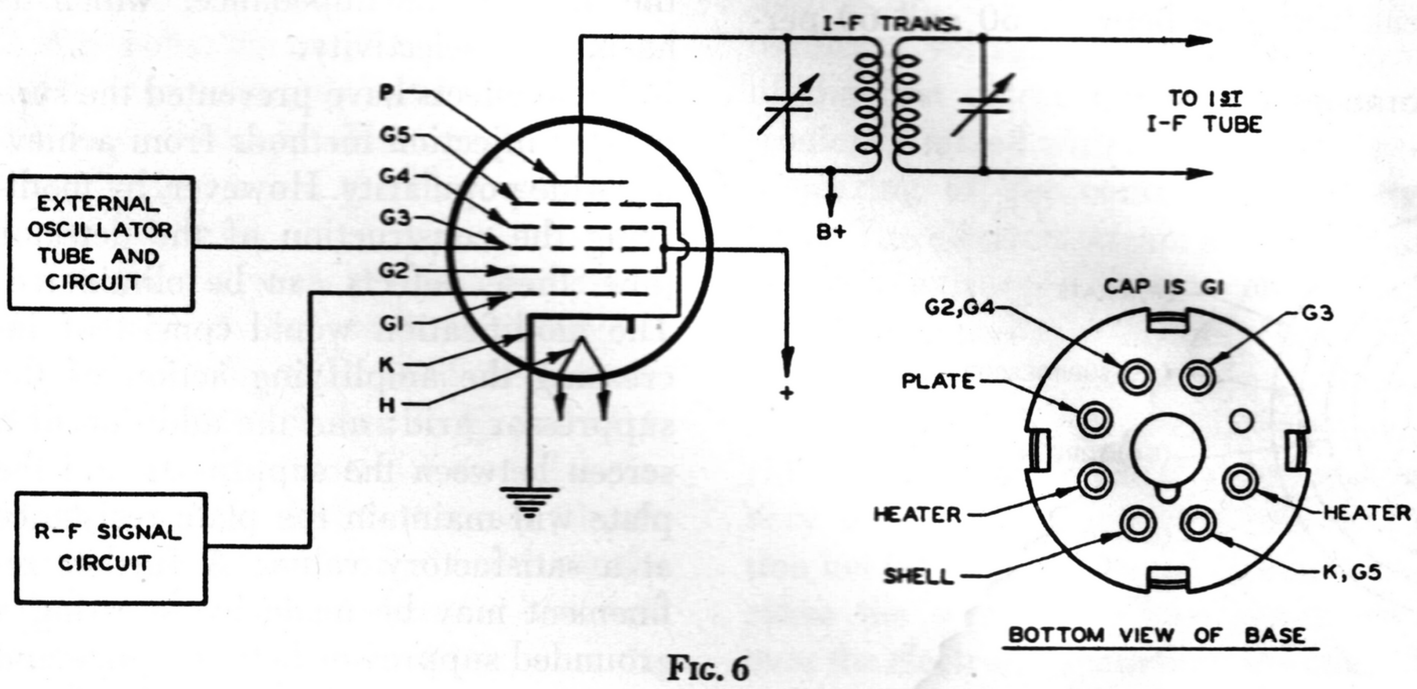

FIG. 6

Autodyne First Detector Combinations

The autodyne reached its greatest popularity and development during the beginning of the depression when a great deal of research work was done on small and inexpensive superheterodynes in which it was necessary to reduce the number of tubes and other parts to a minimum. The greatest impetus to low cost receiver development was, of course, the series heater principle made possible by the 6.3 volt, 0.3 ampere tubes. Prior to the introduction of the 6A7 tube and multi-band receivers, the autodyne detector was used very extensively and a complete knowledge of its mode of operation and adjustment is very necessary to the serviceman.

An R.F. type of pentode tube, such as the 6C6, in which three grids are brought out to independent base terminals, can be used in three basic ways as an oscillator. Feed-back from the plate circuit to the control grid, screen-grid, or suppressor grid will cause the tube to oscillate at a frequency determined by the constants of the circuit elements. In practice the screen grid is not used because of instability caused by operating the screen grid above R.F. ground

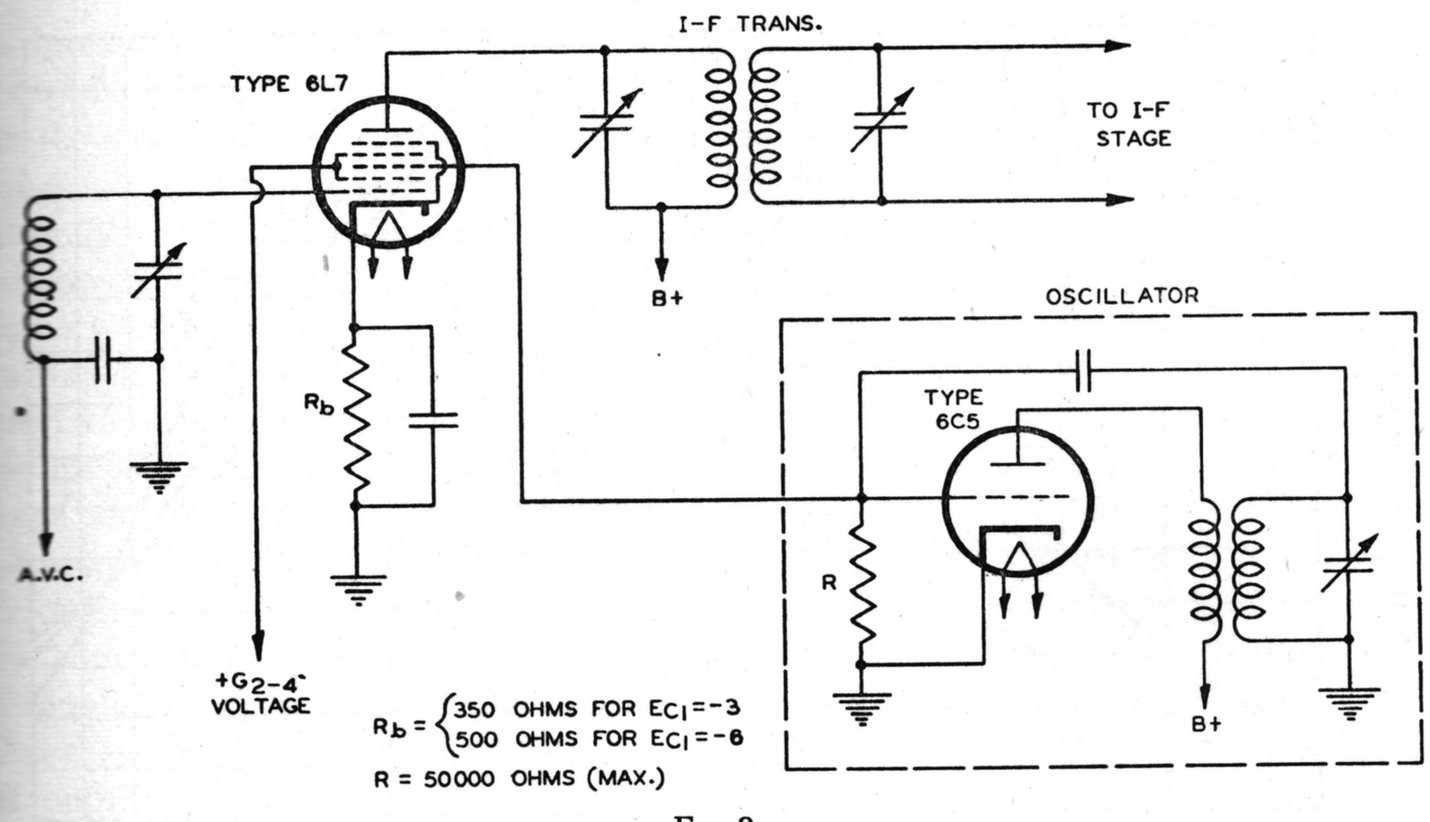

FIG. 8

potential, and because of the load imposed on the tuned circuit by the relatively low internal screen to ground impedance within the tube. Therefore, for purposes of analysis, we can divide all autodyne detectors into two major groups—the control grid types, in which feed-back is between plate and control grid, and the suppressor grid types in which feed-back is between plate and suppressor grid. Both of these types for ease of description will be further subdivided. The tetrode tube cannot, of course, be used as a suppressor grid type autodyne detector.

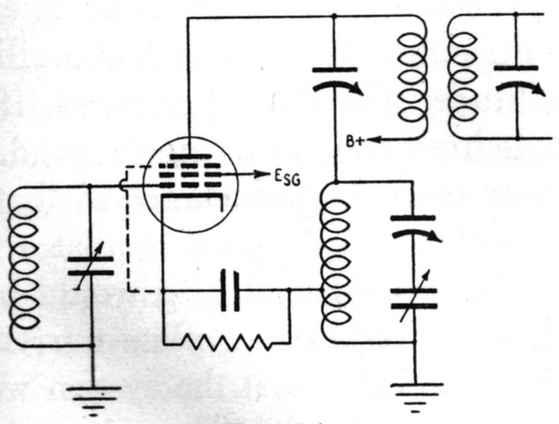

FIG. 9A

Control-Grid Types of Autodyne Detectors

The control-grid type of autodyne detector has been the most popular because of the ease with which proper oscillator amplitude can be secured. (This follows because the mutual conductance between control grid and plate is much higher than that between suppressor grid and plate, and because it can be used with either the tetrode or pentode type of tube construction.)

In Figures 9A, 9B, 9C, 9D, and 9E are shown the three fundamental systems of control grid type of autodyne detector. There are, of course, many other variations, but these will be found upon analysis to be simple modifications of one of the circuits illustrated. In looking over the five circuits mentioned it will be noted that in each case a coil is shown in the cathode circuit of the tube. This is a reliable method of determining that the autodyne under consideration is a control grid type since the suppressor grid type of autodyne detector does not have a coil in the cathode circuit.

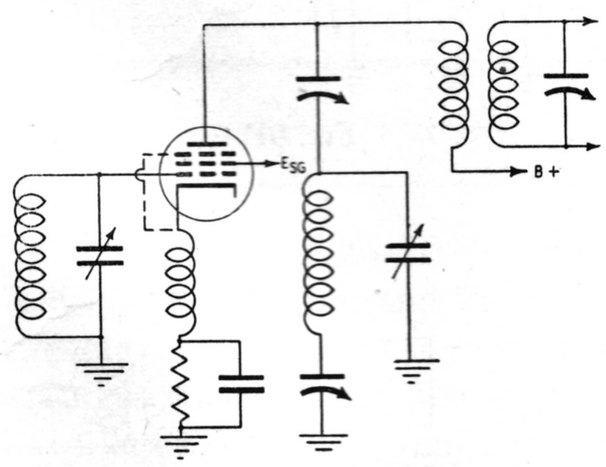

FIG. 9B

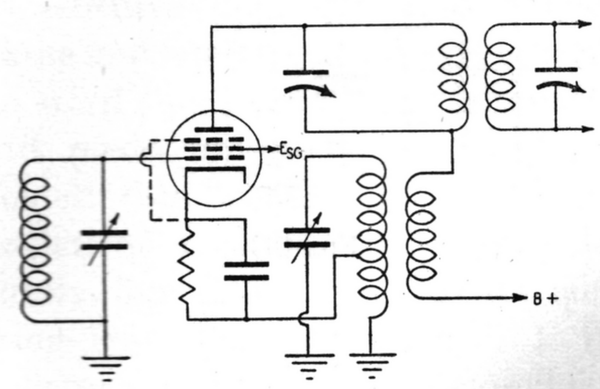

FIG. 9C

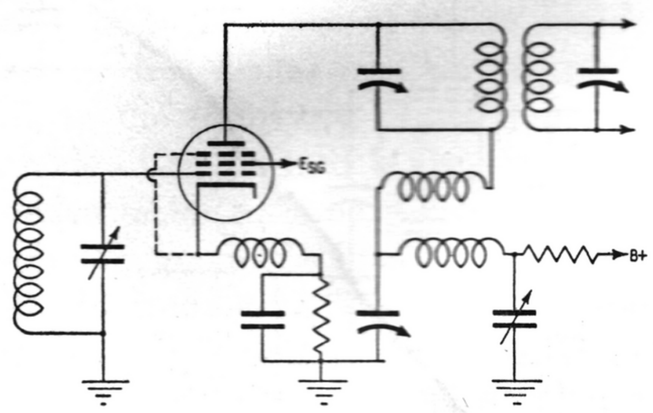

FIG. 9D

The function of the coil in the cathode circuit may not be apparent at first glance. Upon a moment's consideration, however, it will be evident that since all circuits in a vacuum tube must return to the cathode, a coil in the cathode circuit is common to the control grid, screen grid, suppressor grid, and plate circuit, and because a given voltage impressed on the control grid will have a much greater effect on the plate current than the same voltage impressed on either of the other grids or the plate, we can ignore the other effects and, for the purpose of this explanation, consider the voltage impressed on the cathode coil as acting exactly as though we had impressed this voltage on the control grid alone. The A.C. voltage feedback from the plate circuit, at a frequency determined by the L.C. of the circuit, causes the cathode to vary in potential with respect to the control grid, which is, of course, the same effect as varying the control grid voltage with respect to the cathode. Assuming that

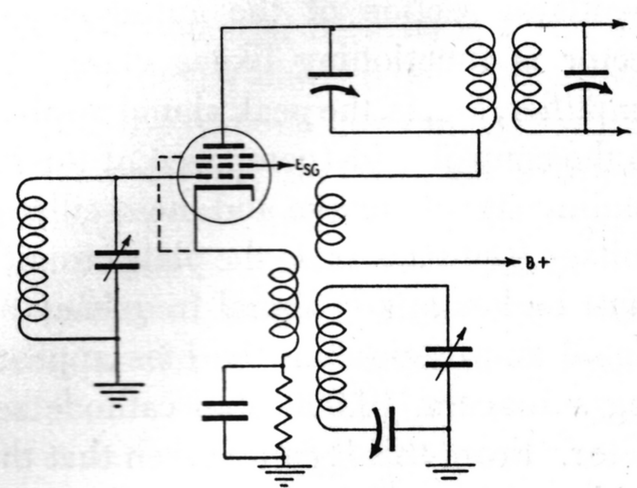

FIG. 9E

the coil system has not been damaged and that no other fault exists in the autodyne detector circuit, trouble may be experienced with an improper value of cathode bias resistor. This will show up usually when it is necessary to replace the original tube. It may be found that several tubes must be tried before one can be found that will operate properly. This undesirable condition can usually be corrected by changing the value of the cathode resistor to 10,000

ohms. In general it will be found that this value of resistance will give the most uniform oscillator performance. This bias value is very important to secure the optimum detector sensitivity and uniform oscillator amplitude. In special cases experimenting with various values of cathode resistors may improve the autodyne detector action and make it unnecessary to pick tubes. It must be kept in mind, however, that the value suggested (10,000 ohms) is the best average compromise between uniform oscillator performance, most sensitive detector action and the ability of the detector to handle large local station signals.

In Figure 9A, a single coil is used and a cathode tap is provided which has the same effect as the separate tickler coil shown in Figures 3B and 3C. You will note in all five diagrams that no grid leak and condenser is used such as was shown in each oscillator circuit of Pages 9 and 10. These units are not required in the control grid autodyne circuit because the oscillator grid—which is also the signal control grid—must not be driven positive by the peak positive cycle of the oscillator wave (should this occur, the signal input circuit will be seriously loaded and poor sensitivity, selectivity and distorted tone quality will result.) We can consider that the oscillator section of the autodyne detector is functioning like a class "A" amplifier, that is, the peak signal applied to the control grid (composed of the incoming signal voltage and the oscillator voltage feed-back from the plate circuit) must be less at any signal frequency or signal amplitude than the bias appearing across the 10,000 ohm cathode resistor. From this it can be seen that the grid cannot rectify a portion of the oscillator voltage or, in other words, draw grid current, as is necessary for bias purposes in the single tube oscillator or in the 6A7 oscillator section, and so a grid leak and condenser are unnecessary. Figures 9A and 9B are examples of the tuned plate, grid tickler types of control grid autodyne. Figure 9C is a tuned grid, plate tickler type and Figures 9D and 9E represent the three coil Meissner circuit in which two tickler windings are coupled to a tank circuit.

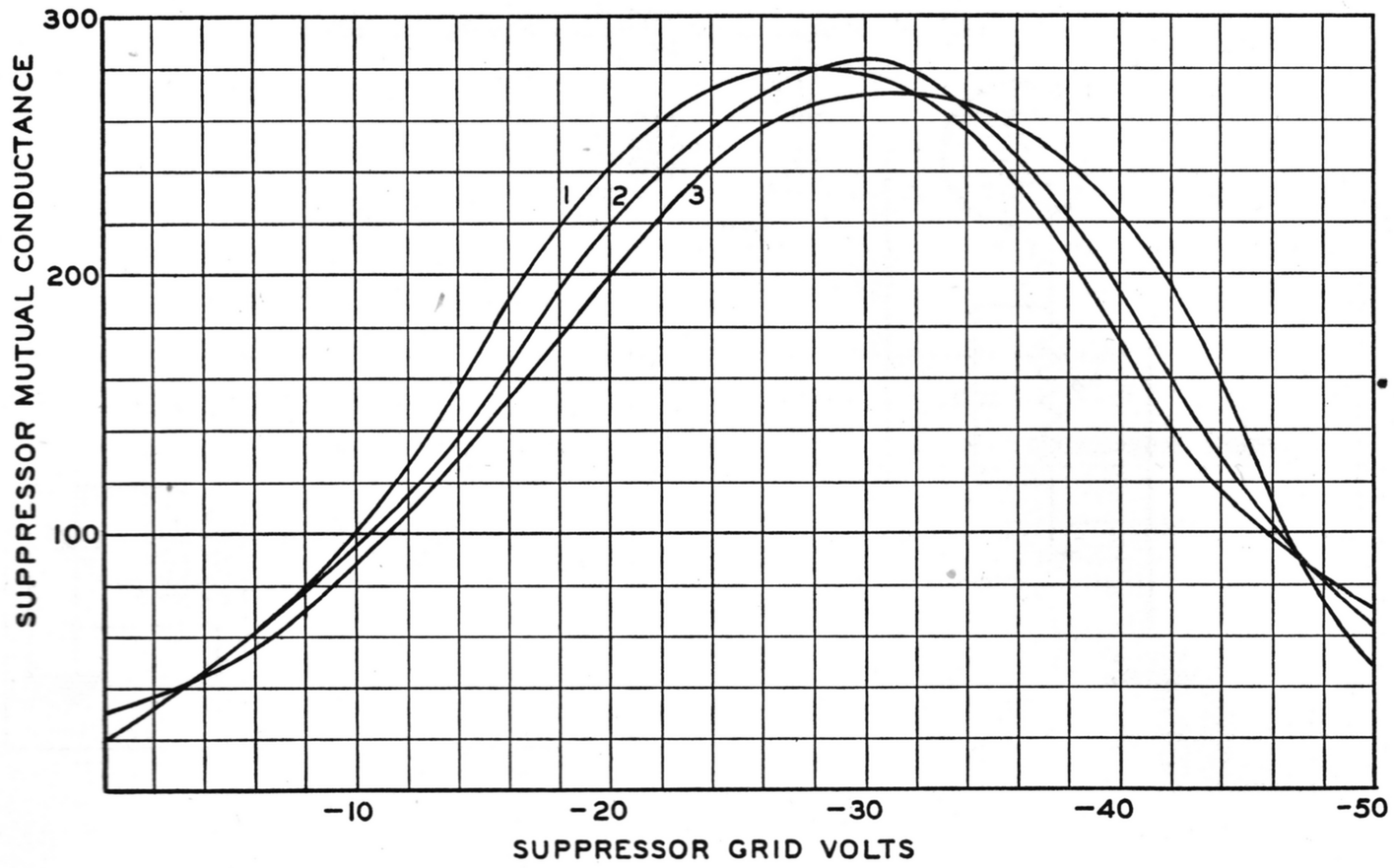

Fig. 9J

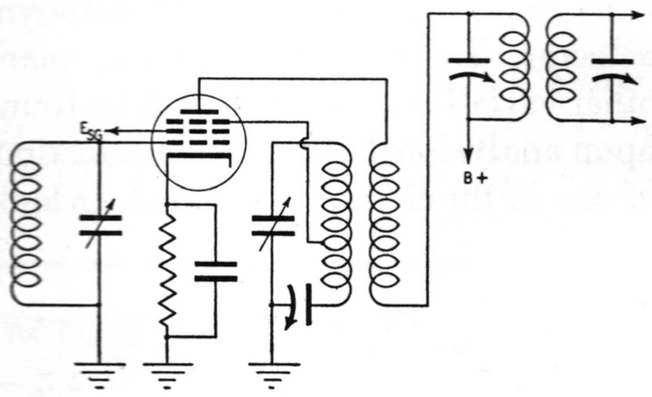

Fig. 9F

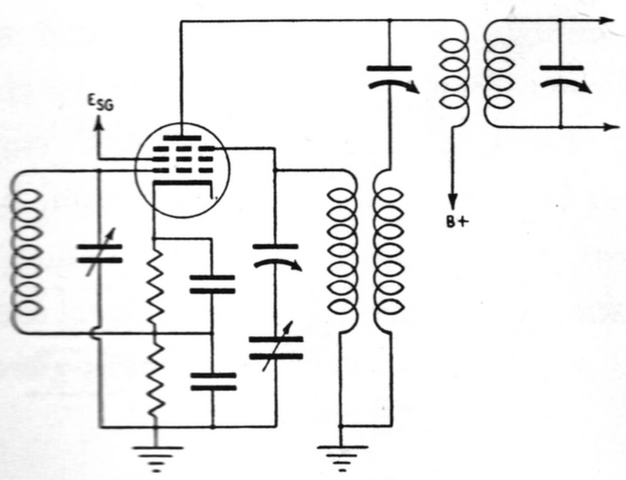

Fig. 9G

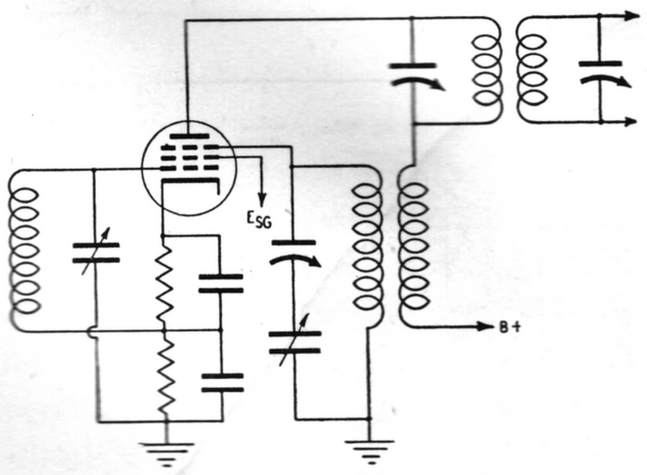

Fig. 9H

Suppressor Grid Type of Autodyne Detector

In Figures 9F, 9G, and 9H are shown three typical examples of the suppressor grid type of autodyne detector. Figure 9F is one of the earliest systems used and has a serious disadvantage in that if a proper bias is secured with the cathode resistor to give good detector action, the mutual conductance of the suppressor grid to plate is so low that it is difficult to secure sufficient oscillator amplitude. On the other hand, if the bias is high enough to give a good suppressor mutual conductance so that the tube will develop a good oscillator voltage, the control grid bias would be so high as to reduce the plate current to such a low value that the system would give very poor gain. There is no satisfactory compromise to eliminate this trouble short of using two resistors in the cathode circuit, such as shown in Figures 9G and 9H, so that the control grid and the suppressor grid may each be biased separately. When this is done, we can bias the control grid 3 or 4 volts negative (measured with a high resistance voltmeter from the midpoint of the two resistors to cathode), and the suppressor grid from 30 to 34 volts negative (measured with a high resistance voltmeter between cathode and ground), and secure both good detector and good oscillator performance. Figure 9J indicates how three good tubes may vary in

suppressor grid to plate mutual conductance. Notice that with a —15 volts bias on the suppressor grid only one of the tubes would have a high enough mutual conductance to give good oscillator performance, whereas at 30 volts all three tubes would work equally well. In adjusting a suppressor grid autodyne, it must be remembered that the developed oscillator voltage will vary through the band and since this in turn varies the plate current (which must of course flow through the cathode circuit resistors) the control grid bias will likewise vary throughout the band. It is important that the control grid bias be maintained at a minimum of 2 volts throughout the entire band. If the control grid bias falls below this value, a strong local signal may drive the control grid positive and cause greatly reduced sensitivity and selectivity, and poor tone quality. All of the autodyne detector circuits discussed have three limitations. These are: 1. low translation gain, 2. limited frequency range (usually the broadcast and police bands only), and 3. the gain of the autodyne detector cannot be controlled by the A.V.C. voltage. For these reasons, almost all present day receiver designers have abandoned the autodyne detector oscillator combination in favor of the later and superior pentagrid converter type of tube—such as the 2A7, 6A7, 6A8 and 6A8G. In repairing some of the older receivers having critical autodyne circuits, there is much to be said in favor of replacing the tube socket and rewiring the receiver for a pentagrid converter.

Pentagrid Converters

The operation of a well designed pentagrid converter stage is so dependable, and the number of circuit components required so few, that it is easy to gain the mistaken impression that if the performance of this stage is unsatisfactory the trouble must be due to the tube. This remark is not intended as absolving the tube of all responsibility, since it is realized that the pentagrid converter is harder worked than any other tube in the receiver with the possible exception of the power tube, but rather to point out at the beginning that making a set work by replacing the pentagrid converter tube—only to have the set again quit operating one to four months later—cannot be considered a reliable method of service procedure. To guarantee service work the serviceman must be satisfied that the method he has employed to correct the trouble really effects a permanent cure, and does not just supply a crutch that permits the circuit to limp along under a heavy handicap of power loss or unfavorable circuit adjustment.

We found in the previous types of oscillator circuits discussed that the set engineer designed the oscillator circuit to give the best compromise between several conflicting considerations—the same thing is true of the pentagrid converter circuits. An intelligent appreciation of these factors, their theory, cause, and cure will make service work much easier and certainly, by eliminating some of the return calls, more profitable.

Pentagrid Converter Theory

Tube types 1A6, 1C6, 1D7G, 1C7G, 2A7, 6A7, 6A8, 6A8G, and 6D8G are all pentagrid converters designed to function as a combined first detector and oscillator to "convert" the incoming signal frequency to an intermediate for the purpose of securing selectivity and sensitivity without fear of interlocking and tetrode section grid current. The word "pentagrid" is a compound word made up of the Greek prefix "Pente" (or "penta" in the English translation) meaning five, and grid—literally, 5-grid. These five grids, numbering from the cathode, are: 1. the oscillator control grid, 2. the oscillator anode, 3. the inner screen grid, 4. the signal control grid, and 5, the outer screen grid. There are, of course, beside these grids a heater or filament, plate and, in the indirectly heated tubes, a cathode. Grids 3 and 5 are connected together inside the tube. Grid No. 2, the oscillator anode, is made in current practice without horizontal wires and consists only of the two side rods. These two side rods are called the oscillator anode (meaning plate) but in circuit diagrams are shown schematically as a grid for simplicity.

The pentagrid converter may be considered as operating very much like a conventional variable-mu tetrode first detector with an associated triode oscillator, except that the oscillator triode grid is located next to the cathode and is common to both the first detector variable-mu tetrode and the oscillator triode. The tetrode section of the tube is modulated by the control grid voltage on the oscillator triode in such a manner that there is no danger of driving the control grid of the tetrode positive. Electrons emitted from the cathode surface are influenced by the various grid and plate voltages and divide up so that grid No. 1 receives 7 per cent of the electrons, the oscillator anode receives 37 per cent of electrons, grids 3 and 5 (screen grid) receive 28 per cent of the electrons, and the plate receives the remaining 28 per cent.

Because of the oscillator grid's strategic position next to the cathode, any oscillator voltage on this grid will modulate the entire electron stream regardless of the ultimate destination of the electrons. Referring to diagram 10, it is interesting to observe the action that takes place within the tube when it and the associated circuit components are operating normally. When the set is first turned on, the No. 1 grid is at zero potential because it is tied to the cathode by the 50,000 ohm grid leak. As the cathode heats up and starts to emit electrons, the feed-back between oscillator anode and grid causes regeneration which immediately starts the triode circuit to oscillating. When the oscillator circuit is oscillating, the No. 1 grid is driven alternatingly positive and negative. While the grid is positive, grid current flows through the grid leak in such a direction as to make the No. 1 grid negative with respect to the cathode. This grid swing may make the grid negative by as much as 30 to 40 volts, and this becomes the grid bias point about which the grid varies in amplitude alternately in a positive and then a negative direction under the influence of plate circuit feed-back. From this it can be seen that the maximum instantaneous negative voltage on the No. 1 grid may be 60 to 80 volts. This voltage would ordinarily be more than sufficient to reduce the tetrode plate current to

zero were it not for a secondary source of electrons available to the No. 4 grid. This second electron source is referred to as a virtual cathode because it is employed exactly as though it were another electron emitting cathode. The reason for its existence is that most of the cathode's supply of electrons go through the No. 1 grid while it has a positive or slight negative charge, and are accelerated out of the No. 1 grid's field of influence by the relatively high positive potential on the No. 3 grid. The next grid—tetrode section control grid—has at all times a negative bias on it so that a great many of these electrons are slowed down and form a cloud of electrons between the No. 3 and No. 4 grid. It is from this cloud of electrons (virtual cathode) that most of the plate current is secured during that portion of a cycle that the No. 1 grid is at its maximum negative potential. It is easy to see from this action that the tetrode section works independently of the triode section, except that the tetrode plate current is modulated by the triode grid voltage. The No. 3 grid shields the triode section from the tetrode section and prevents interaction. The tetrode grid No. 4 is shielded from the plate by the other screen grid, No. 5. Grids 3 and 5 are connected together inside the tube. Automatic volume control bias may be applied to the tetrode section without affecting the performance of the oscillator section, since the oscillator triode secures its plate current first, direct from the cathode.

Oscillator Coil Coupling

The value of heterodyning voltage developed by the triode section of the tube is determined largely by the degree of coupling between the tank or grid circuit, and the tickler or plate circuit. On the long wave band, 150 to 350 kc., and to a lesser extent on the broadcast band little trouble is encountered in securing sufficient coupling. In fact, care must be taken to prevent too much feedback in order to avoid causing the tube to oscillate so strongly that parasitic oscillation will result. By "parasitic" oscillation is meant the generation of extraneous frequencies, besides the fundamental desired, that are usually higher in frequency than the fundamental. These usually occur at the high frequency end of the band and may make the receiver sound as though some other part of the receiver system were oscillating. This condition may be difficult to trace to its source if the true reason for its existence is not suspected, because any change in circuit constants that affects the voltages on the various elements of the pentagrid converter will change the frequency or amplitude or both of its characteristics. The proper cure for this trouble is either to space the two coils farther apart or to reduce the number of turns on the tickler winding. The latter method is preferable because it has the least effect on the tracking of the oscillator, since very little change is made in the capacity to ground of the tank circuit. This change may be necessary on the long wave and broadcast bands of sets that were manufactured shortly after the 2A7 and 6A7 were introduced, because it was found necessary to increase the triode section mutual conductance of these tubes in order to provide satisfactory operation on the short wave receivers that were just becoming popular at that time. The first sign of this condition will occur when a new tube is used to replace the one originally supplied with the receiver. If the receiver is designed for broadcast only, any trace of parasitic oscillation may be eliminated by connecting a 500 to 1,000 ohm resistor from the oscillator grid terminal of the socket to the common point of the grid leak and condenser as shown in Figure 10. This suppressor resistor will tend to equalize the developed oscillator voltage over the broadcast band. It should not be used on receivers having short wave bands. The reason for this is that it is almost impossible to secure too much coupling between oscillator coils on the higher frequencies. This problem is just the reverse of that encountered on broadcast and long wave bands. On the short wave bands every effort is made to secure the greatest mutual inductance between the two coils, so that the developed oscillator voltage will be as great as possible. The problem is even more acute on those receivers that use a large capacity tuning condenser to secure the greatest frequency coverage on each band, since it is usually true that the greater the band width covered the lower the oscillator voltage will be and hence the lower the converter stage gain. For the high frequency bands the tickler and tank coils are placed very close together and often the two windings are interwound to secure the maximum possible coupling. When the maximum band width is to be covered, stray capacities must be kept at a minimum, and in order to reduce the coil's distributed capacity to a minimum only a few turns of the tickler can be interwound with the low potential end of the tank coil. This necessitates a compromise between developed oscillator voltage and the band width that can be covered. A practical compromise is to adjust the oscillator voltage (by means of the coupling between tickler and tank coils) to give about .1 ma. grid current through the oscillator grid leak at the low frequency end of the short wave band and then reduce wiring and circuit capacities to give the greatest spread between the minimum

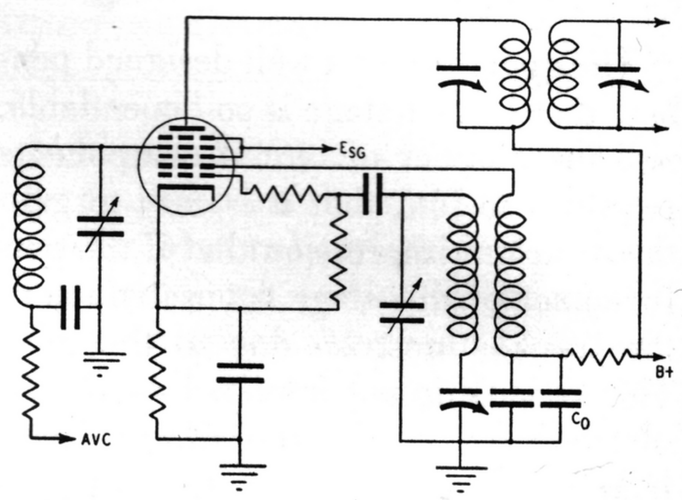

FIG. 10

and maximum frequencies that can be secured with the variable condenser being used. In the absence of a vacuum tube voltmeter, this method is the most reliable method of determining the developed oscillator voltage. Connect a 0-1 ma. meter in series between cathode and 50,000 ohm grid leak so that D.C. current flowing through the resistor will indicate on the meter. The oscillator A.C. voltage is then equal to the current multiplied by the resistance of the grid leak. For A.C.-D.C. receivers this current may vary between .05 ma. and .25 ma. depending upon the frequency at which the oscillator is set. The minimum current will flow at the low frequency end of the highest frequency band and the maximum current will be around 1,200 to 1,600 kc. in the broadcast band. For A.C. receivers this grid current will vary from .1 to .75 ma. If the oscillator stops oscillating at the low frequency end of the short wave band and the suggestions mentioned under "Grid Block-

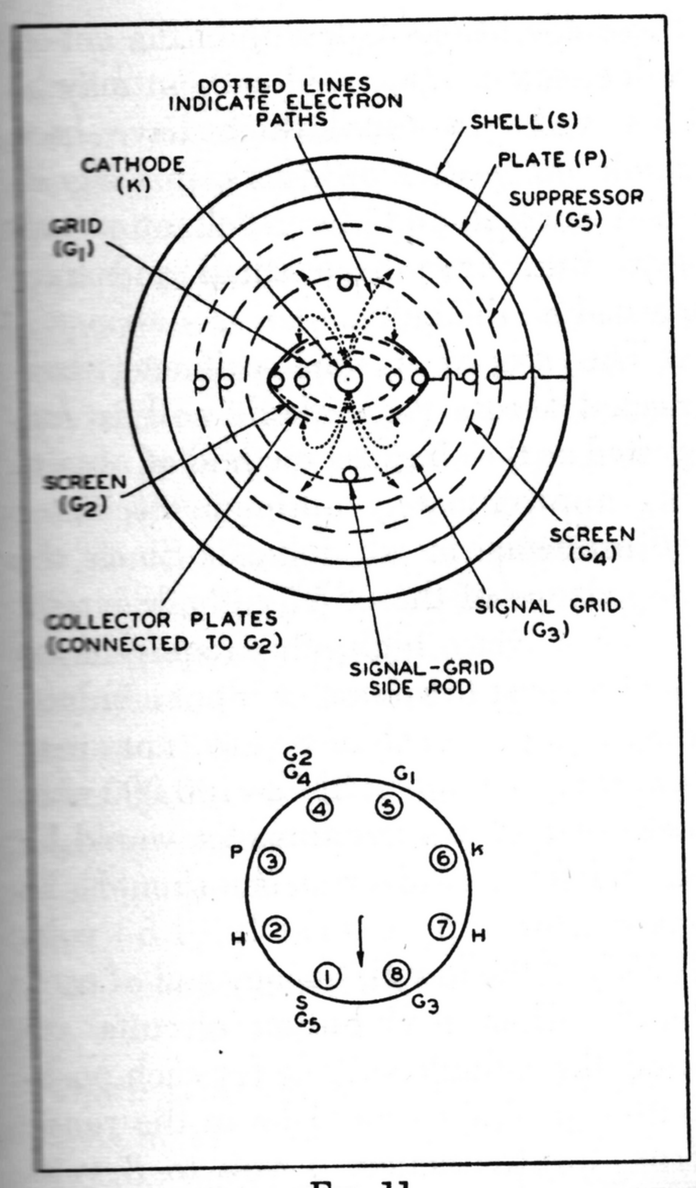

FIG. 11

ing Condenser" and "Grid Leak Resistor" (see page 19) do not eliminate this trouble, the coupling between tank and tickler coils should be increased. Usually it will not be possible to add more than one or two turns to the tickler coil to effect this increase in coupling or the tickler coil will resonate within the band and cause trouble. If this increase is insufficient to correct the difficulty, make sure the coil is dry and that the "B" supply voltage is normal, then push the two coils as close together as possible and accept the slight loss in band coverage that will result. Such drastic action is seldom necessary unless new replacement coils are unobtainable for the set. Varying the size of the grid blocking condenser will often prove effective in increasing the developed oscillator voltage.

Single-Ended Converters

The 6SA7 and 12SA7 are single-ended pentagrid converters designed to perform the functions of oscillator and mixer in all-wave receivers. Since the 6SA7 and 12SA7 tubes are identical except for heater current and voltage, the designation —SA7 in the following text refers equally to either type of tube. Structurally, these tubes differ from other converter tube types in two important respects: (1) all electrodes including the signal grid terminate at base pins, and (2) there is no electrode which functions only as oscillator anode.

The single-ended construction employed in the —SA7 effects an appreciable saving in installation cost because a flexible grid lead and top-cap connector are not required; in addition, the lead connecting to the signal-grid terminal of the socket can be made short and rigid. Because there is no electrode in the —SA7 that serves only as oscillator anode, the oscillator circuit shown in Figure 12A is recommended for use with this tube type. In this circuit, the screen and the plate function as oscillator anode and are at ground potential for the oscillator frequency. The construction of the oscillator coil and the switching arrangement suggested in Figure 12 for use with the —SA7 are simpler than those often employed with other converter tube types. As a result, an appreciable saving in coil and circuit cost may be realized.

Description of the 6SA7-12SA7

As shown in Figure 11, the —SA7 consists of a heater, cathode, a grid (G_1) for the oscillator function, a screen (G_2 and G_4), a pair of collector plates mounted on the side rods of G_2, a signal grid (G_3), a suppressor (G_5), and a plate. The suppressor is connected to the shell, and the two grids forming the screen are connected together inside the tube. The presence of the suppressor increases the tube's plate resistance and, therefore, increases conversion gain. This action of the suppressor is especially important when the tube is operated with a plate-supply voltage as low as the screen voltage, as in an A.C.-D.C. receiver. An important function of the screen and collector plates is to minimize the effect of signal-grid voltage on the space charge near the cathode. The negative voltage on the signal grid repels electrons traveling toward the plate and turns some of these electrons back toward the cathode. Any of these electrons which reach the region near the cathode affect space-charge conditions in this region. It can be seen from Figure 11 that, because of the position of the signal-grid side rods with respect to the collector plates, the collector plates in-

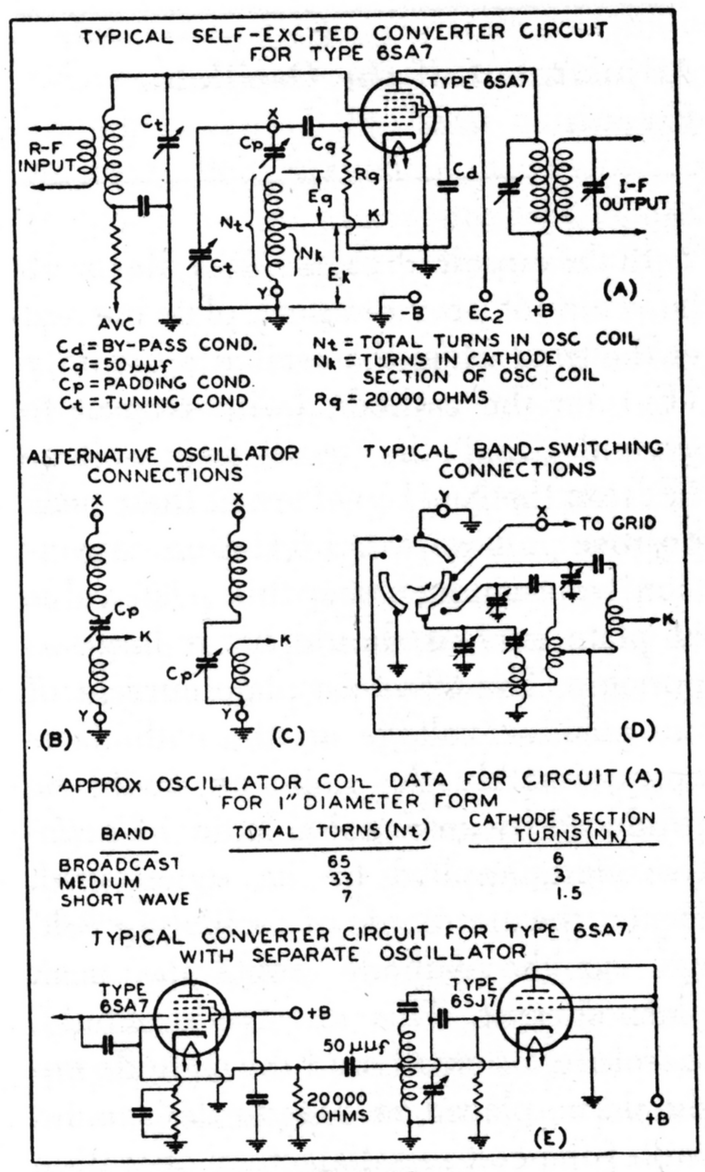

FIG. 12

tercept most of the returning electrons. The electrons returned by the signal grid, therefore, have little effect on the space charge near the cathode. Because of the shielding effect of the screen, the electrostatic field of the signal grid also has little effect on the space charge. Thus, the collector plates and the screen serve to isolate the cathode space charge from the signal grid.

The result is that a change in signal-grid voltage produces little change in cathode current. Although a change in signal-grid voltage produces a change in plate current, this change is accompanied by an opposite and almost equal change in screen current. An R.F. voltage on the signal grid, therefore, produces little modulation of the electron current flowing in the cathode circuit. This feature is important because it is desirable that the impedance in the cathode circuit should produce little degeneration or regeneration of the signal-frequency input and intermediate-frequency output. Another important feature is that, because signal-grid voltage has little effect on the space charge near the cathode, changes in A.V.C. bias produce little change in oscillator transconductance and in the input capacitance of the No. 1 grid. There is, therefore, little detuning of the oscillator by A.V.C. bias.

Adjustment of the Oscillator Circuit

In the circuit of Figure 12A, the oscillator circuit provides peak plate current at the time when the oscillating voltage (E_k) on the cathode (with respect to ground) and the oscillating voltage (E_g) on the No. 1 grid are at their peak positive values. For maximum conversion transconductance, this peak value of plate current should be as large as possible. The effect on plate current of the positive voltage on the cathode is approximately the same as would be produced by an equal voltage, of negative sign, applied to the signal grid. Hence, the amplitude of oscillating voltage on the cathode limits the peak plate current. This amplitude should, therefore, be small, and the cathode tap should be placed as close to the ground end of the coil as satisfactory operation will permit.

During the negative portion of an oscillation cycle, the cathode may swing more negative than the signal grid. If this occurs, the signal grid will draw current unless the oscillator grid is sufficiently negative to cut off cathode current. This signal-grid current will develop a negative bias on the signal grid and may also cause a negative bias to be applied to the R.F. and I.F. stages through the A.V.C. system. As a result, sensitivity will be decreased. In order that signal-grid current should be prevented, the D.C. bias developed on the oscillator grid should be not less than its cut-off value.

Because the peak plate current depends on how far positive the oscillator grid swings with respect to cathode, it is desirable that this positive swing be as large as possible. It follows that the oscillator grid-leak resistance should be low. This resistance, however, should not be so low as to cause excessive damping of the tank circuit. It has been found, for operation in frequency bands lower than approximately 6 megacycles, that all these requirements are generally best satisfied when the oscillator circuit is adjusted to provide, with recommended values of plate and screen voltage, a value of E_k of approximately 2 volts peak, and an oscillator-grid current of 0.5 milliampere through a grid-leak resistance (R_g) of 20,000 ohms. With a 20,000-ohm grid-leak resistance, the rectification efficiency of the No. 1 grid is approximately 0.7. Since the bias on this grid is 10 volts (0.5 milliampere $\times$ 20,000 ohms), the peak value of E_g is approximately $10/0.7 = 14$ volts. With a 10-volt bias and a peak oscillator-grid voltage of 14 volts, the peak positive voltage of the oscillator grid with respect to cathode is 4 volts. If a higher value of R_g were used, the rectification efficiency would be higher; hence for the same value of E_g, the peak positive voltage of the oscillator grid with respect to cathode would be lower, and, therefore, the conversion transconductance would be lower.

In the low- and medium-frequency bands, the recommended oscillator conditions can be readily obtained. However, in the frequency band covering frequencies higher than approximately 6 megacycles, the tank-circuit impedance is generally so low that it is not easy to obtain these oscillator conditions, especially at the low-frequency end of the band. For optimum performance in this band, it is generally best to adjust the oscillator circuit for maximum conversion gain at the low-frequency end of the band. This method of adjustment has the disadvantage that when the oscillator is tuned to the high-frequency end of the band, E_k will be greater than 2 volts peak and conversion gain will, therefore, be less than the maximum obtainable. However, this disadvantage is usually outweighed by the considerations that overexcitation at the high-frequency end of the band improves frequency stability, that some decrease in conversion gain at the high end of the band can be tolerated because the R.F. tuned circuits have higher impedance at this end of the band, and that a good factor of safety is provided against the possibility of oscillation being stopped by a decrease in line voltage.

Maximum conversion gain at the low-frequency end of the high-frequency band is usually obtained by adjustment of the oscillator circuit to give a value of E_k of approximately 2 volts peak and an oscillator-grid current of 0.20 to 0.25 milliampere, with a grid leak of 20,000 ohms. Because the oscillator-grid bias voltage developed under these conditions is less than the cut-off value, some signal-grid current may be observed. In tests which have been made on typical receivers, this signal-grid current and the resultant signal-grid bias have been small and have caused no difficulty.

The use of a tube voltmeter connected across the cathode coil is suggested as the simplest method of obtaining approximately optimum oscillator adjustments in all bands. Since the impedance of the 6SA7 cathode circuit is never very high, the requirements with respect to voltmeter input conductance and capacitance are not very severe; a diode with a 100,000-ohm resistor and a microammeter would be satisfactory. Adjustment should be made for approximately 1.5 volts R.M.S. at the low-frequency end of each band; when push-button circuits are used, the cathode voltage for each push-button position should be in the range from approximately 1 volt to 3 volts R.M.S. for best results.

Space-charge coupling between the No. 1 grid and signal grid is present in the 6SA7, as in other converter types. This coupling is due to the effect of No. 1-grid voltage on the space charge in the region of the signal grid. An important effect of space-charge coupling is to cause a voltage of oscillator frequency (f_o) to appear across the signal-grid circuit. This voltage is 180 degrees out of phase with the No. 1-grid voltage when f_o is greater than the signal frequency (f_s). Thus, in the usual receiver in which f_o is greater than f_s, the effective modulation of the signal-grid-to-plate transconductance by a voltage of oscillator frequency is reduced; the value of conversion transconductance, which is proportional to this modulation, is also reduced.

In many converter tube types, the effects of space-charge coupling can be reduced by connecting a small condenser between No. 1 grid and signal grid. Although this scheme reduces the voltage of oscillator frequency that appears across the signal-grid circuit, it is not recommended for use in self-excited circuits using the 6SA7. Tests in receivers with such a condenser show that: (1) sensitivity at frequencies in the region of 18 megacycles is not greatly improved, (2) the tendency to flutter increases, (3) frequency stability de-

creases, and (4) pull-in between signal and oscillator circuits increases. Because these undesirable effects are produced in self-excited circuits by capacitance between the No. 1 grid and signal grid, the direct interelectrode capacitance between these grids has been made small. The base pins are arranged so that stray circuit capacitance between these grids can also be made small.

The conversion transconductance of the 6SA7 for the 250-volt operating conditions is approximately 450 micromhos; the tube's plate resistance is approximately 0.8 megohm. The conversion gain, which is the ratio of I.F. voltage across the plate load to R.F. voltage input, is given by:

$$\text{Conversion Gain} = \frac{g_c r_p R_L}{r_p + R_L}$$

where g_c is the conversion transconductance of the tube, r_p is the plate resistance of the tube, and R_L is the resonant impedance of the I.F. transformer measured across the primary terminals.

Operation of the —SA7 with a Separate Oscillator

The —SA7 may be used with a separate oscillator. A typical circuit for such operation is shown in Fig. 12E. With separate excitation, there is no oscillating voltage on the cathode. The amplitude of oscillation, therefore, can well be made higher than the amplitude used in self-excitation. As a result, somewhat higher conversion transconductance can be obtained with separate excitation than with self-excitation. When separate excitation is used, it may be desirable to neutralize the effects of space-charge coupling by connecting a small capacitance between the No. 1 grid and No. 3 grid, as shown in Figure 12E.

Suggested Circuits

Alternative oscillator connections for the circuit of Figure 12A are shown in Figures 12B and 12C. In Figure 12B, the tank current of the oscillator circuit flows through the cathode coil and contributes to grid-plate coupling; this contribution is not present in the circuit of Figure 12C. These circuits are recommended when the series padding condenser is to be adjustable. Figure 12B places this condenser at a small R.F. potential, and is satisfactory in most cases. Figure 12C permits grounding one side of the condenser. Typical waveband switching connections for the oscillator circuit are shown in Figure 12D. The optimum oscillator conditions for these circuits are approximately the same as those for Figure 12A.

Operation of the 6SA7 with Reduced Screen Voltages

In some applications, it may be desirable to operate the 6SA7 with a screen voltage less than 100 volts. Screen voltage can be made considerably less than 100 volts without excessive loss of conversion gain. For example, measurements on a typical receiver show that sensitivity is reduced only about 25 per cent when the screen voltage of the 6SA7 is reduced from 100 volts to 70 volts. When the 6SA7 is operated with self-excitation and reduced screen voltage, the adjustment of feed-back voltage on the cathode should be made so as to insure that oscillation will continue when line voltage is low.

Circuit Constant Considerations

(All Type Converters)

Grid Blocking Condenser

The oscillator grid blocking condenser has three major functions. These are: 1. it separates the A.C. and D.C. circuits so that the D.C. path (from grid to ground) may have a resistance of 25,000 to 50,000 ohms to develop grid bias and the A.C. circuit may be a non-conductor for D.C. which is desirable when we wish to use a padder condenser for alignment as is usually the case; 2. it stores up electrons during that portion of a cycle that the grid is driven positive and releases them during the time the grid is negative to maintain an almost constant negative grid bias; and 3. it reduces the reflected capacity within the tube to a smaller value in order that the tuning range of the band may be increased. This reduction in capacity is simply a matter of placing a condenser in series with the effective grid-cathode capacity of the tube (two capacities in series are of course equal to less than the smaller of the two).

The usual value of .00025 mfd. or 250 mmf. for this capacitor has been found too large for some all wave sets where it is necessary to secure the greatest tuning range on each band in order to reduce the number of bands required. Its value varies in different sets between 50 mmf. and 250 mmf. depending on the design of the oscillator coil. Unfortunately, when we reduce the value of this condenser we also reduce the percentage of total oscillator voltage (appearing across the tank circuit) that is applied to the control grid of the oscillator. Here again we must compromise between the tuning range and the developed oscillator voltage. When the oscillator refuses to oscillate on the low frequency end of the short wave band, increasing the capacity of this condenser will often correct the trouble at the cost of a slight sacrifice in tuning range on that band. Care must be taken to see that this added capacity does not cause parasitic oscillation on the high frequency end of the broadcast or long wave band.

Grid Leak Resistor

The grid leak resistor is fairly well fixed by oscillator grid bias requirements and should be of such value that:

1. The electrons stored in the condenser do not all leak off before the oscillator grid is again driven positive.
2. It does not provide too low a shunt resistance across the tank circuit so that ample A.C. voltage cannot be developed.
3. It will not cause motor boating or "super regeneration" due to the time constant of the resistor and condenser combination.

A value of 50,000 ohms is a very satisfactory compromise between these three considerations, and if trouble is encountered in a receiver having a lower value than this it is well to change this resistor to 50,000 ohms.

In pentagrid converter circuits having A.V.C. voltage applied to the tetrode control grid the oscillator grid leak resistor should be returned to the cathode rather than ground. If it is connected to the ground the oscillator grid bias will vary with the A.V.C. voltage because of the varying current through the cathode resistor.

Oscillator Anode Resistor

On all pentagrid converters except the —SA7 types, a 20,000 ohm resistor is recommended in series with the anode "B" voltage supply on A.C. receivers having 250 volt B supplies to prevent excess anode current should the oscillator stop oscillating or should the receiver be operated for any length of time at a frequency where the developed oscillator voltage is low. When the oscillator voltage is low the oscillator grid bias is low and the oscillator anode current is higher than normal—this may have an injurious effect on the tube if continued for any length of time. The 20,000 ohm resistor eliminates this trouble by dropping the anode voltage to a safe value during periods of excess anode current. Often the value of this resistance is increased and a condenser added to provide a hum filter to permit the oscillator anode voltage to be secured ahead of the regular power supply choke. The advantage of this is to make the oscillator anode voltage less dependent on the D.C. drop through the choke, which of course, varies with the plate current of the power tubes. This method of securing a more constant anode voltage is especially useful on the short wave band. The effect of a varying oscillator anode voltage on high frequencies is to tune out the signal until the plate current on the power tube drops to normal—which returns the anode voltage to normal which then tunes in the signal. This sequence of events makes the receiver "motorboat." Any hum appearing on the oscillator anode will modulate the oscillator, which in turn will modulate the signal, causing "tunable hum" which can, of course, be cured by proper filtering.

Voltage on Elements

As may be expected in such a complicated tube structure, the use of other than recommended voltages on the various elements will result in improper electron distribution patterns within the tube and will cause unsatisfactory circuit performance. For example, reducing the screen voltage will adversely affect oscillator performance and will make the plate current cut-off point lower, which will result in a loss in sensitivity and cause more "hiss" for a given input signal. A heater voltage 0.5 volts or more below normal may, in critical sets, cause the oscillator to stop oscillating on the low frequency end of the short wave band. Too low a tetrode control grid bias may cause poor performance on strong local signals.

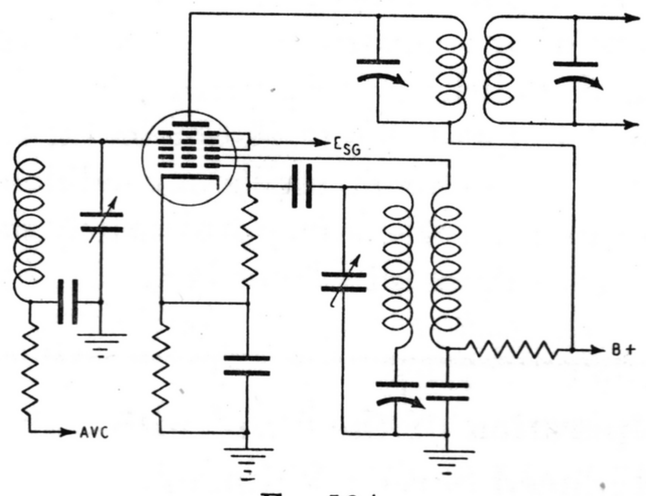

FIG. 13A

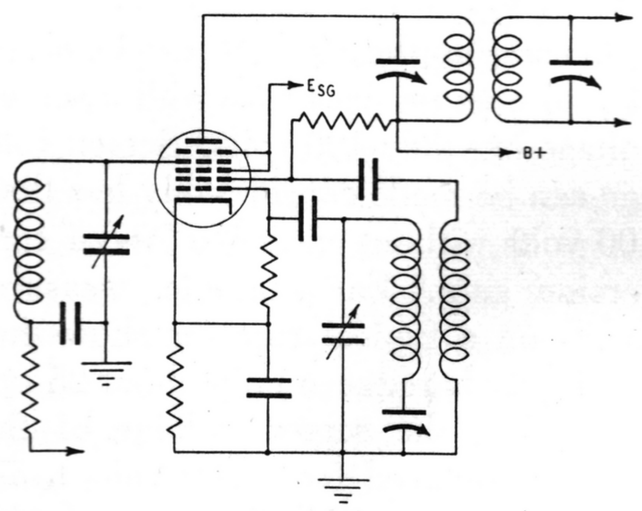

FIG. 13B

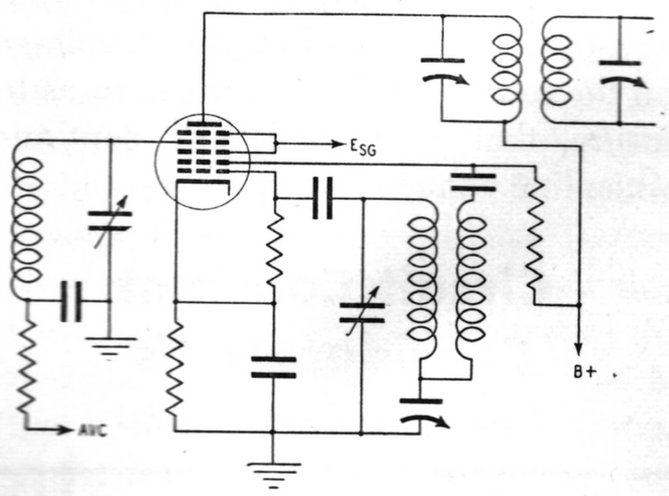

FIG. 13C

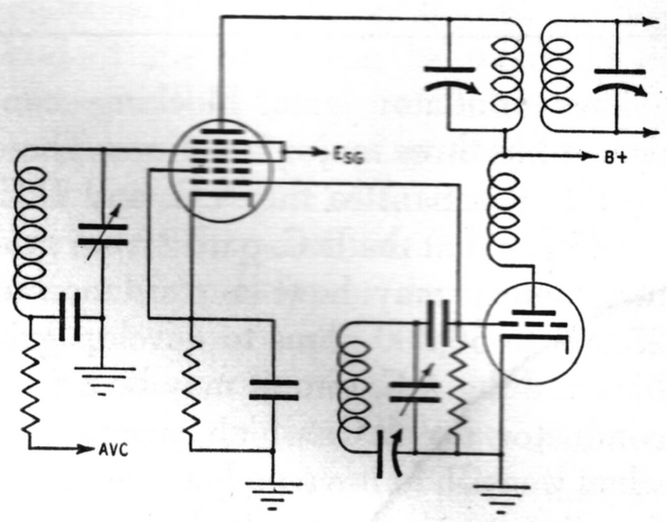

FIG. 13D

The total cathode current should not exceed 14 ma. maximum and will usually average about 11 ma.

Typical Circuits

Figure 13A indicates the average pentagrid converter circuit with A.V.C. voltage applied to the tetrode section control grid. Figure 10 is the same circuit with suppressor resistor and an anode hum filter added. The capacity of the electrolytic condenser will depend upon the amount of filtering required and is usually shunted with a paper condenser, and on short wave sets also with a mica condenser for more effective high frequency by-pass action.

To make wave band switching problems easier the shunt fed circuit of Figure 13B is often used. One end of the tickler is grounded and the other end is connected to the oscillator anode through a blocking condenser.

A method of maintaining more constant oscillator voltage over the band is shown in Figure 13C. In this circuit, the tickler coil is shunt fed and the low potential end is connected to ground through the padder condenser to increase the coupling on the low frequency end of the band.

In Figure 13D is shown a method sometimes used to increase the oscillator voltage—a separate tube is used as an oscillator and the oscillator grid is used as an injector grid. This provides a worthwhile gain in sensitivity, especially on the high frequency bands where the oscillator, because of increased grid circuit losses and insufficient coupling between oscillator grid and plate coils, develops a much smaller voltage. The usual oscillator anode is not used and is connected to the cathode, screen grid, or ground.

SUMMARY

It is the purpose of this section to summarize the characteristics of the various mixer tubes; and to compare their relative merits and demerits. The 6SA7 and 12SA7 types are omitted from this discussion except for the reference in Figure 15, inasmuch as their application and characteristics have been described in previous paragraphs.

Each type converter and mixer has inherent characteristics that differentiate it from the others. Considering the 6A8 and 6A8G as being representative of the first group of pentagrids, comprising the 2A7, 6A7, 1A6, 1C6, 1C7G and 1D7G, we now have the types 6A8, 6A8G, 6L7, 6J8G, and 6K8. The 6A8 and 6A8G are considered separately because of a difference in interelectrode capacitance that gives them slightly different characteristics in some applications. The material to be discussed compares characteristics of the several types and shows inherent advantages and limitations of each.

The chart Figure 14 was prepared to show the constructions used in the several types. The 6A8 and 6A8G, normally known as five grid tubes, are shown as they are made, with four grids and a pair of side rods. The side rods are the oscillator anode.

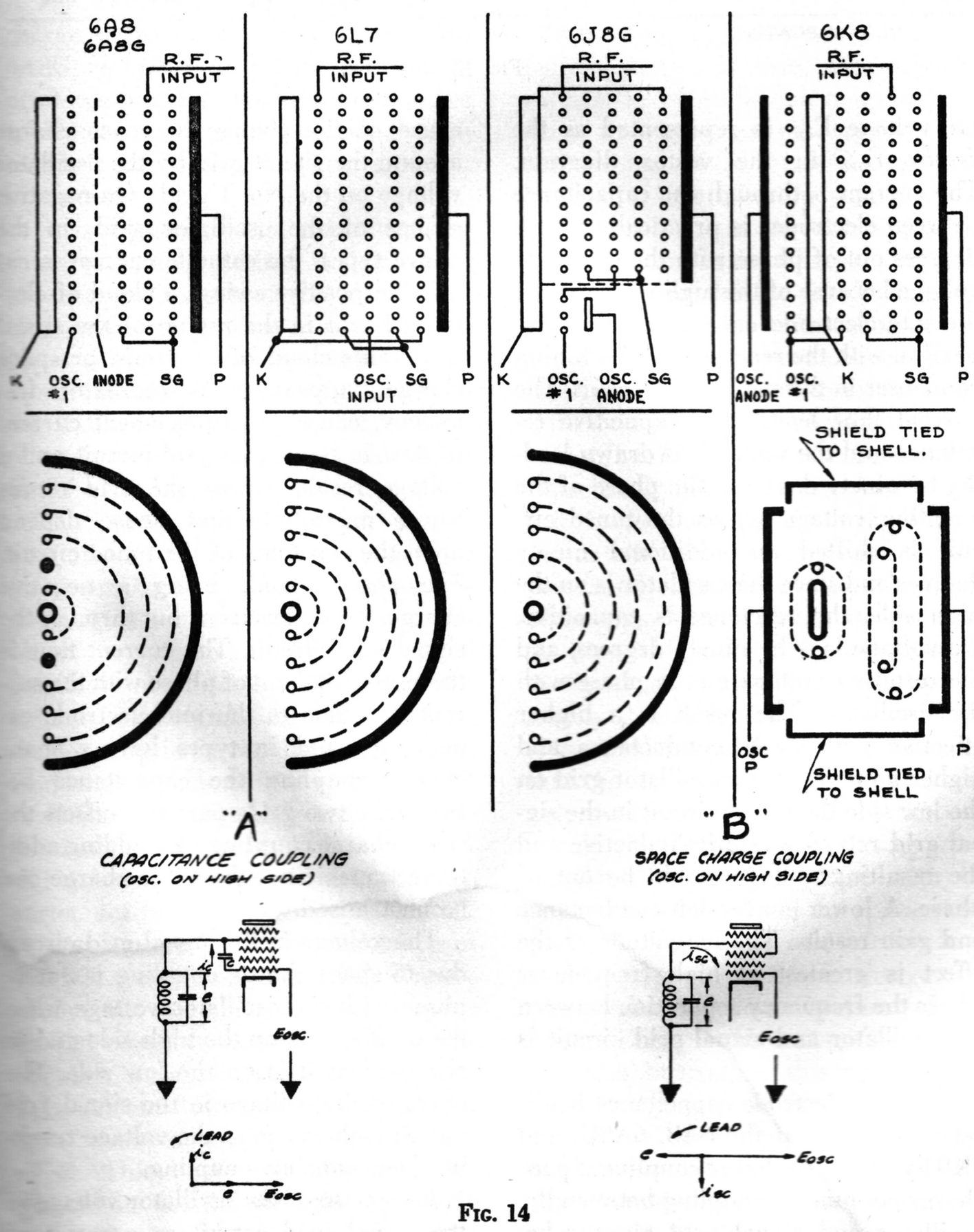

FIG. 14

The 6L7G construction, designed for mixer service, uses five grids. The No. 1 grid is the R.F. input grid, the No. 2 and No. 4 grids are the screen, the No. 3 grid the injector grid, and the No. 5 grid the suppressor.

The 6J8G construction is identical to that of the 6L7 except that it has an additional triode section mounted at the bottom of the common cathode. The grid of the triode is tied internally to the No. 3 grid of the heptode.

The 6K8 is of an entirely new construction best shown by the bottom sketch at the right of the page. A single flat cathode is used with a common No. 1 grid for the oscillator and hexode section. A flat plate is used for both the oscillator and hexode. The screen and R.F. input grids are positioned approximately as shown on the sketch. The shields as shown are placed to give a suppressor action to the hexode section thus raising its plate resistance and making possible the use of the screen and plate at the same potential.

The ability of the tube to develop a current at an intermediate frequency is given by the conversion conductance, which by definition is the ratio of an incremental change in intermediate frequency current to the incremental change in R.F. signal voltage that produces the current. This conductance in micromhos is published on all converters and its use to calculate stage gain is analogous to the use of mutual with R.F. amplifier pentodes. The gain equation for a single tuned load is:

$$\text{Gain} = \frac{G_c\, R_p\, R_L}{R_p + R_L}$$

The above equation involves only one other tube characteristic, and that is plate resistance. Published values of plate resistance and conversion conductance can therefore be used to calculate stage gain.

In application there are certain phenomena that alter characteristics or circuit parameters and the results are a gain value somewhat different than calculated from published data. These unpublished characteristics are essential in selecting a tube for a particular service.

Assuming the use of rated voltages and oscillator grid current there are in

general the following effects that occur in the several tubes:

1. Degeneration at the R.F. signal frequency.
2. D.C. current flow in the R.F. signal grid circuit that upsets operating conditions.
3. Oscillator voltage appears in circuits other than those associated with the oscillator. This voltage may be in phase or out of phase with the normal oscillator voltage and the resulting plate current at oscillator frequency may be increased or decreased. As conversion conductance and gain are functions of the plate current, the measured gain is different from that calculated.
4. Negative or positive loading in the signal grid circuit affects the antenna or interstage gain driving the converter tube. Calculations are often upset because of this phenomenon.

To facilitate comparison of the five converter and mixer tubes, the chart Figure 15 was prepared. It lists eight separate phenomena found in the several tubes. In addition, a tabulation of the more important interelectrode capacitances and of the two characteristics, plate resistance and conversion conductance, is given.

CONVERTER COMPARISON

CHARACTERISTICS	6A8	6A8G	6SA7	6J8G	6K8	6L7
CAPACITY COUPLING OSCILLATOR TO SIGNAL GRID	YES	YES	YES	YES	YES	YES
SPACE CHARGE COUPLING OSC. TO SIGNAL GRID	YES	YES	NO	NO	YES	NO
CAPACITY COUPLING FROM ANODE TO SIGNAL GRID	YES	YES	NO	NO	NO	——
DEGENERATION AT R.F. SIGNAL GRID TO PLATE CAPACITY	NEGL.	YES	NEGL.	NEGL.	NEGL.	NEGL
OSCILLATING VOLTAGE IN SIGNAL GRID DUE TO G-P CAPACITY	NEGL.	YES	NEGL.	NEGL.	NEGL.	NEGL
DIRECT CURRENT IN SIGNAL GRID DUE TO TRANSIT TIME	NO	NO	NO	YES	NO	YES
DEGENERATION DUE TO NEGATIVE S_M SIGNAL GRID TO ANODE	YES	YES	NO	NO	NO	NO
INPUT LOADING AT HIGH FREQUENCIES	NEG.	NEG.	NEG.	POS.	NEG.	POS.
CAPACITY R.F GRID TO PLATE	.03	0.3	.013	.01	.03	.0005
CAPACITY R F. GRID TO ALL	12.5	8.5	9.5	4 7	6.6	8.5
CAPACITY PLATE TO ALL	12.5	9.0	12.0	8.7	3.5	12.5
CAPACITY OSC GRID TO ALL	6.5	7.0	4.4	12.2	6.0	11.5
CAPACITY OSC. PLATE TO ALL	5.0	5.5	——	5.7	3.2	——
PLATE RESISTANCE (MEGOHMS)	.36	.36	0.8	4.0	0.6	1.0+
CONVERSION CONDUCTANCE	500	500	450	290	350	350

NEG.= NEGATIVE NEGL.= NEGLIGIBLE

FIG. 15

The first phenomenon, capacity coupling from oscillator to signal grid, is experienced with all tubes. The capacitance, not shown, is approximately .1 mmfd. for each type. The result of the coupling is mainly that oscillator voltage appears across the signal grid tuned circuit. At extremely high frequencies the impedance of the signal grid circuit to the oscillator frequency is quite high, and the magnitude of the voltage becomes high enough to over-ride the bias and cause grid current. If the voltage does not produce grid current, the effect is either to increase or decrease the conversion conductance and conversion gain. If the voltage is sufficient to cause grid current to flow, the D.C. current upsets the operating conditions, with attendant loss in sensitivity.

The oscillator voltage in the signal grid return, as a result of capacity coupling, is in phase with the normal oscillator voltage if the oscillator is on the high side of the resonant frequency of the tuned circuit in the signal grid circuit. The phase can be traced easily and is shown by A of Figure 14. The oscillator voltage E_{osc} is represented as the vector E_{osc} in the vector diagram. The current i_c through the capacitance between electrodes is practically ninety degrees out of phase with the oscillator voltage because of the high reactance of the interelectrode capacitance in comparison with the reactance of the tuning condenser in the signal grid circuit. The current flow leads in a capacitive reactance and the vector i_c is drawn leading by ninety degrees. The phase of the resulting voltage across the tuned circuit is shifted an additional ninety degrees and since the oscillator is on the high side, the reactance is capacitive, the voltage lags by ninety degrees, and the resulting voltage e is in phase with the oscillator. The result is a higher effective conversion conductance and higher gain. With the oscillator grid on the low side the tuned circuit in the signal grid return would be inductive and the resulting voltage would be out of phase. A lower conversion conductance and gain results. The magnitude of the effect is greatest at high frequencies where the frequency separation between the oscillator and signal grid circuit is small.

The interelectrode capacitance is offset in the case of the 6A8, 6A8G, and 6K8 by the space charge coupling. Space charge coupling is coupling between the oscillator and signal grid circuits because of the change in space charge around the signal grid by the oscillator voltage on the No. 1 grid. On negative swings of the oscillator grid, in the above types, the cathode current is cut off. On positive swings a cloud of electrons forms in the region of the signal grid. This cloud of electrons, or space charge, appearing at oscillator frequency, causes a displacement current to flow in the signal grid circuit and a voltage results across the grid return whose magnitude and phase depend upon the constants of the tuned circuit. The space cloud, being a negative charge, drives electrons out through the signal grid circuit. The current flow is therefore 180° out of phase with the current flow due to the interelectrode capacitance and in types having space charge coupling the capacitance between the two grids partially offsets the space charge coupling. By adding additional capacitance the space charge can be neutralized.

The voltage in the signal grid circuit due to space charge coupling is out of phase with the oscillator voltage when the oscillator is on the high side and in phase when it is on the low side. The effect of this voltage in the signal grid circuit is the same as the voltage resulting from capacity coupling.

The phase of the oscillator voltage in the signal grid circuit as a result of

space charge coupling is shown by the diagram B of Figure 14. The oscillator voltage is drawn as E_{osc} and the current flow i_{sc} is drawn lagging by ninety degrees. The current is 180° out of phase with the capacitive current i_c in "A." With the oscillator on the high side, the voltage e resulting from i_{sc} lags by ninety degrees because of the capacitive reactance of the signal grid circuit. The resulting voltage e is out of phase with the normal oscillator voltage E_{osc} with the oscillator on the high side. By shifting the oscillator to the low side the voltage will be in phase.

The space charge coupling can be neutralized with a capacitance, and its magnitude is conveniently expressed in the value of the capacitance required to obtain neutralization. Since the interelectrode capacitance is approximately .1 mmfd. it can be seen that the space charge is the major effect in the 6A8, 6A8G, and 6K8. Also, since the voltage produces a loss in sensitivity when the oscillator is on the conventional high side it is imperative that neutralization be made.

It is customary to neutralize the space charge by adding a "gimmick" between the stators of the signal grid and oscillator tuning condensers. A piece of wire with low loss insulation is used. One end is soldered to the lug on the stator of either condenser and the other end is looped through the eyelet in the other lug.

The capacitance can be adjusted to give maximum sensitivity or to give minimum oscillator voltage across the signal grid tuned circuit. In most applications with no neutralization at frequencies of fifteen megacycles the voltage in the signal grid coil will cause the flow of grid current. At extreme high frequencies, such as fifty megacycles, it is difficult to neutralize sufficiently to eliminate grid current. With such a condition it is recommended that the converter not be controlled by the A.V.C. A maximum grid return resistance of 100,000 ohms is recommended. The use of the 6L7 or 6J8G having no space charge coupling is no solution to the problem because these tubes have a D.C. current flowing in the signal grid as a result of a peculiar transit time effect. This phenomenon will be explained in detail later in this text. In a typical commercial receiver designed to tune to 70 megacycles data were taken with a 6L7 as a mixer and the 6K8 as a converter. It was found that with either tube a current of several microamperes was measured in the grid return. To offset the effect, the tube was run with no A.V.C. with a .1 megohm filtering resistor for isolation. Satisfactory operation was experienced with either tube. The 6K8 was somewhat difficult to neutralize perfectly but neutralization sufficient to obtain comparable sensitivity to the 6L7 was not at all difficult. In using "gimmicks" at high frequencies the wire and its insulation must be of the low loss variety. At 50 megacycles the loss with a poor "gimmick" wire can easily offset the advantage of neutralization. A "gimmick" found to be satisfactory was made out of enameled wire using only the enamel for insulation.

The loss in sensitivity due to space charge coupling does not amount to more than two or three db unless the voltage is of sufficient magnitude to drive into grid current regions. Any new design of a receiver should be checked to determine the voltage in the signal grid circuit through either capacitance or space charge coupling. Preferably the voltage should be measured with a vacuum tube voltmeter but not having that a microammeter can be inserted in the grid return to determine if the grid is being driven positive.

Oscillator voltage can be coupled capacitively into the signal grid circuit in two additional ways. That is through the anode to signal grid capacitance and through the signal grid to plate capacitance. In the former case, the type 6A8 and 6A8G have an anode to signal grid capacitance of approximately .1 mmfd. and oscillator voltage is coupled back by virtue of the fact that the anode load contains considerable oscillator voltage. Since the voltage in the anode winding is approximately 180° out of phase with the voltage in the grid coil the voltage coupled into the signal grid circuit is of the same phase as space charge coupled voltage. Neutralization of the space charge in the conventional methods also neutralizes this voltage. The effect is negligible in the 6J8G and 6K8 because of their lower interelectrode capacitance. The anode to signal grid capacitance with these tubes is approximately .01 mmfd.

Another effect of the high grid to plate capacitance of the 6A8G that is of more importance is degeneration to the signal frequency. The capacitive plate load of the I.F. transformer fulfills the requirement for degeneration. This is evaluated most easily by measuring the input conductance or by measuring the change in coil Q of a tuned circuit in the grid return as a result of loading with the input conductance. The conductance can be calculated from the change in Q. Since the results of the degeneration are loss in gain in the driver and since gain is usually calculated in terms of the coil Q the actual loss in Q is of more importance than the input conductance.

The degeneration is greatest at frequencies near the I.F. frequency because the reactance in the plate load increases rapidly as the I.F. frequency is approached. With a 456 kc. intermediate the greatest degeneration takes place on the low frequency end of the broadcast band. With the conventional I.F. coil at this frequency the I.F. tuning condenser is approximately 100 mmfd. At 550 kc. the effective capacitance is of the order of 35 mmfd. Calculations show that with these values a reflected resistance of approximately 100,000 ohms is obtained with the 6A8G. The equation used for calculating the loading effect due to degeneration is as follows:

$$R_g = \frac{C}{S_m\, C_{g-p}}$$

Where R_g = Resistance component of input impedance.
S_m = Mutual conductance from signal grid to plate.
C = Effective capacitance of the load.
C_{g-p} = Grid to plate capacitance of the tube.

The mutual conductance for most pentagrids with the oscillator section oscillating is approximately 700 micromhos.

The G-P capacitance of all types except the 6A8G is low enough to be practically negligible. The 6A8G, shielded, has a capacitance of approximately .3 mmfd. Unshielded the value will be somewhat higher and will be influenced by other factors such as position of grid leads, etc. In general .6 mmfd. can be considered an average value.

The effective capacitance of the load depends on the frequency under consideration. At high frequencies it is approximately the capacitance required to tune the I.F. to the intermediate frequency. At lower frequencies, approaching the I.F. frequency, the effective capacitance is much lower. For example at the low end of the broadcast band with a 465 kc. intermediate frequency it may be as low as one-third the capacitance of the padder. The value should be estimated or calculated for the frequency under consideration.

The equation for input resistance shows the need of a large condenser for the I.F. primary. Coils designed with a high inductance primary to give a high tuned impedance will produce more degeneration because of the lower value of padder capacitance required. This practice is satisfactory with tubes having a low grid to plate capacitance.

As was mentioned previously, the 6J8G and 6L7 at high frequencies have a D.C. current flow in the signal grid circuit that upsets operating conditions and causes a loss in gain. Electrons that are accelerated through the No. 2 screen grid approach the No. 3 injector grid. At high frequencies where the time of transit between cathode and No. 3 grid is an appreciable portion of the period of oscillation, electrons accelerated by the No. 3 grid on its positive swings reach the grid at a time when it is going negative and are repelled and turned back toward the screen. On the way back they are accelerated by the positive potential on the screen and by the increasing negative potential of the No. 3 grid. Many of these returning electrons reach the screen and are drawn off as additional screen current. Some of the electrons, however, pass very close to the screen and are accelerated toward the No. 1 grid at high velocity. Many of the electrons obtain sufficient energy to overcome the negative potential of the No. 1 grid and flow in the external No. 1 grid circuit. This flow of current is a D.C. current flow in a direction such that the drop in the external resistance increases the bias. If the tube is operated from the A.V.C. string as in the conventional case, the total return to ground is of the order of two megohms. A current of several microamperes increases the bias sufficiently to cause an appreciable loss in gain. The current can be eliminated for frequencies up to approximately eighteen megacycles by increasing the bias. The 6L7, for example, is rated with —6 volts bias and 150 volts on the screen. The additional screen voltage offsets the lowering of the gain by the high bias. The limit to the bias increase is the maximum screen dissipation. 150 volts is the maximum allowable screen voltage for the 6L7.

For frequencies above eighteen megacycles where it is not possible to increase the bias sufficient to overcome the grid current the only alternative is to eliminate the high grid return resistance by using the converter without A.V.C.

The current resulting from transit time is a direct current and can be measured in the grid return with the tuned circuit shorted. It is the effect of this current through the high resistance A.V.C. return that causes trouble in the receiver.

The 6J8G and 6K8 are designed with a higher oscillator mutual than the earlier 6A8 and 6A8G. The high mutual gives greater oscillator amplitude at high frequencies where adverse oscillator conditions are found. A comparison of oscillator characteristics in terms of the mutual conductance of the oscillator section at zero bias and 100 volts on the plate is given by the following tabulation.

Type	*Oscillator Transconductance in Micromhos*
6A8—6A8G	1,000
6J8G	1,700
6K8	3,000

The high mutual conductance of the oscillator section of the 6K8 gives satisfactory oscillator performance at 100 volts. The 6K8 can therefore be operated efficiently with 100 volts on the plate, screen and oscillator anode. This is of decided advantage in A.C.-D.C. receivers.

The chief disadvantages of the 6A8 and 6A8G have been instability of the oscillator, and frequency shift with terminal voltage variation. The construction of the 6A8 is such that the oscillator mutual is very much a function of the signal grid bias, and anode and screen voltage. In operation at high frequencies with power supplies having poor regulation characteristics, motorboating often results. The phenomenon occurs as follows: As the signal is tuned in, the audio signal causes an increase in current drain which changes the "B" voltage. The resulting voltage shift detunes the oscillator, the voltage returns to normal, the oscillator retunes to the signal and the cycle repeats iself.

Instability with the 6A8 and 6A8G results mainly because of the changes in oscillator mutual with signal grid bias. Increasing the bias from –3 volts to cut-off practically doubles the oscillator mutual. The increased mutual increases the oscillator amplitude and shifts the frequency. When operated on the A.V.C. string the 6A8 and 6A8G sometimes motorboat as a result of the time constant in the grid return circuits.

Another effect is that with severe fading the A.V.C. voltage fluctuates with the signal, detuning the oscillator, and high distortion results because the signal is not properly tuned to resonance at all times. The new tubes, the 6J8G and 6K8, have been designed to minimize this effect. The increase in oscillator mutual on the 6A8 and 6A8G for a bias increase from –3 volts to cut-off is approximately one hundred percent. For a similar increase in bias on the 6K8 the oscillator mutual increases approximately five percent. The oscillator mutual of the 6J8G is independent of signal grid bias.

Another factor influencing coupling and instability is negative mutual conductance from the signal grid to the oscillator anode. The characteristics of the 6A8 and 6A8G are such that an increase in negative bias on the signal grid causes an increase in anode current. This constitutes a negative mutual conductance, and under normal conditions this mutual is of the order of 400 micromhos. This effect is practically eliminated in the 6K8 construction. Measurements show a value of approximately twenty-five micromhos. The 6J8G with its separate triode has negligible coupling resulting from this characteristic.

Conclusion

The omission of the battery tube converters and the converters of the Loktal family in this article is not due to any lack of importance of these tube types. In any summary of this kind the difficulty is not in finding adequate material, but in deciding what material must be sacrificed to meet the space requirements of the publication.

It is the feeling of your editors that the descriptions and characteristics of the tubes presented herein will give the service engineer a working knowledge of the principles involved, and that armed with this information, the application principles of other converter tube types will be apparent. Research continues in the great laboratories of the major tube companies, and further developments of the art can be expected.

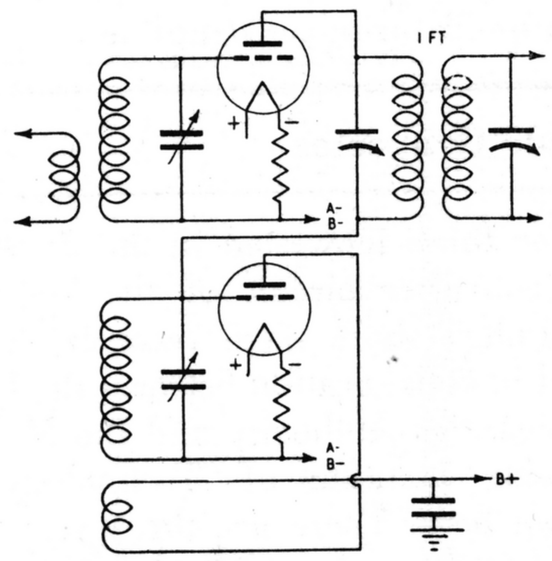

LECAULT "ULTRADYNE"

MISCELLANEOUS CIRCUITS

This section shows several detector oscillator circuits of especial interest either because they illustrate some special application of the features discussed in the preceding text, because of their unconventional design, or because they represent a new trend in radio construction.

Converter Circuit, Silver Marshall Model R

This circuit illustrates several points discussed in the text. The oscillator uses the Meissner circuit with an added pick-up coil for cathode injection of the oscillator voltage.

On the broadcast band the oscillator operates at a higher frequency than the signal. On the police band the oscillator operates on the low side. Switching between broadcast and police bands is accomplished by means of the simple single pole-double throw switch SW_1.

The police band antenna tuning condenser C1 is not ganged, but is brought to a separate knob on the front panel. On the police band this receiver has two tuning controls.

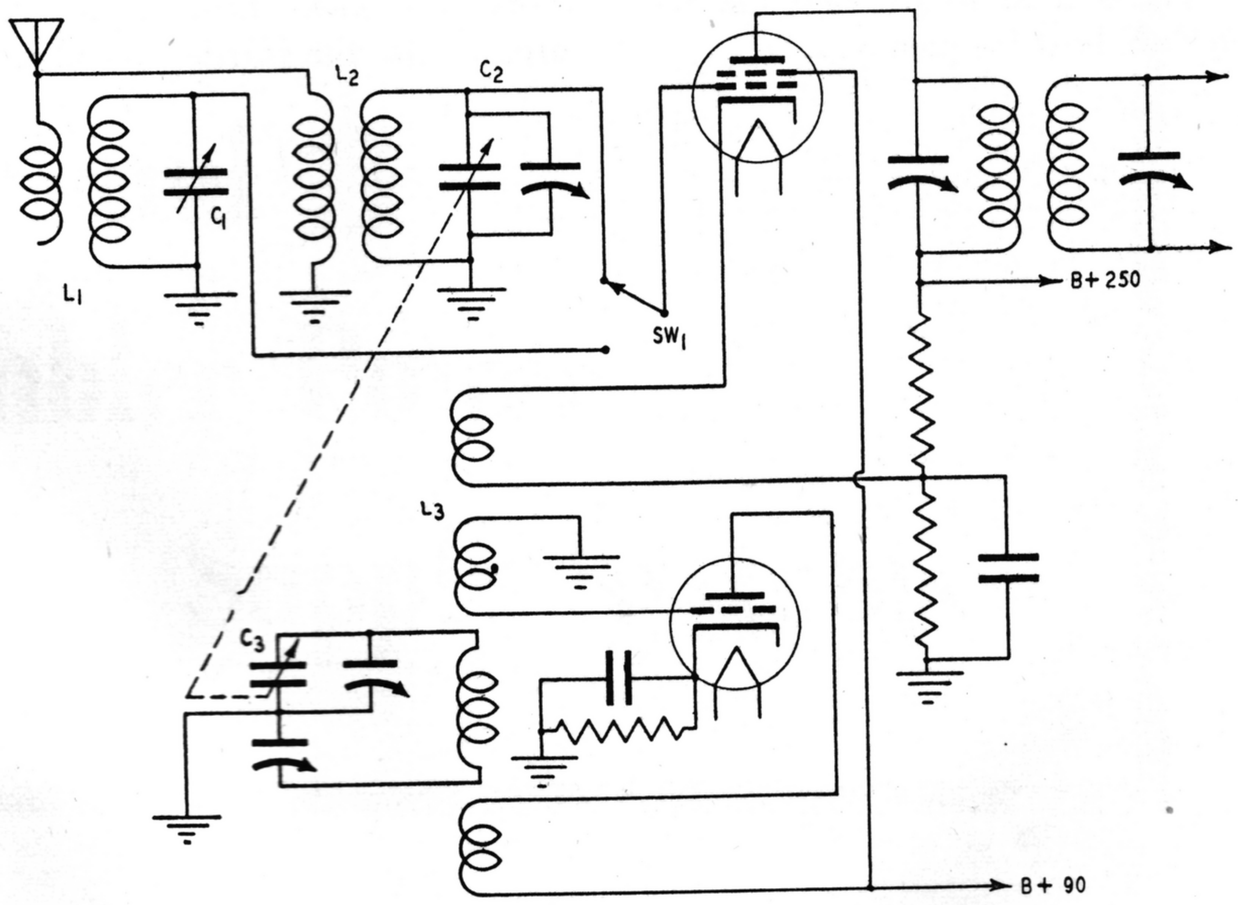

SILVER MARSHALL MODEL R

Lecault "Ultradyne"

A circuit which will bring back fond memories to the old timers is the Lecault "Ultradyne." Note that the plate potential for the mixer is A.C. derived by returning the low side of the primary I.F. transformer winding to the grid of

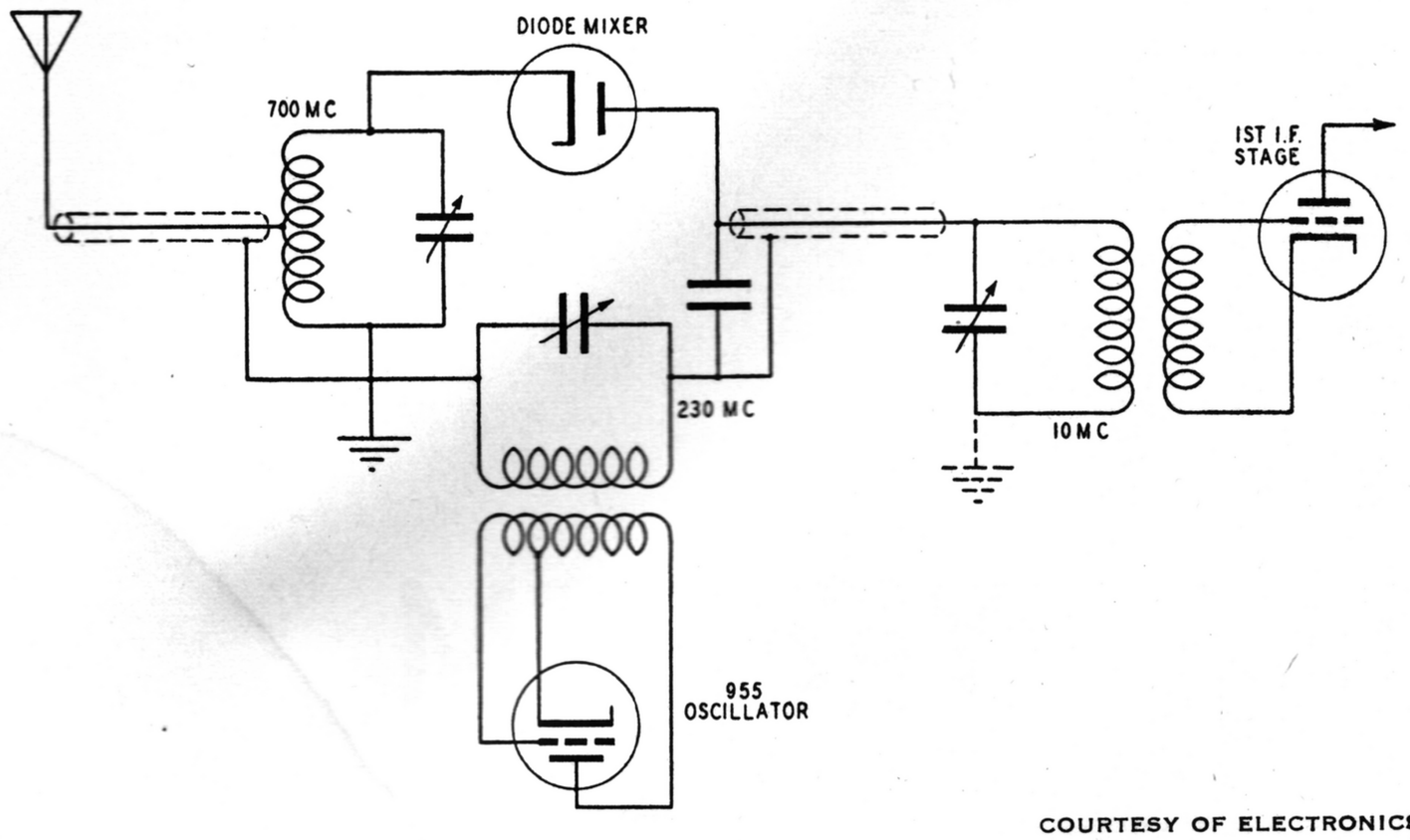

COURTESY OF ELECTRONICS

ULTRA HIGH-FREQUENCY DIODE CONVERTER

the oscillator. This could be considered as one of the earliest examples of electron oscillator-mixer coupling.

Diode Converter

For those interested in the unusual, the converter circuit of the 700 Mc ultra-ultra short wave receiver developed in collaboration between the Civil Aeronautics Authority and the Massachusetts Institute of Technology is shown here. There are three very unusual features about this circuit.

1. The 1st detector is a diode.
2. The third harmonic of the oscillator is used to provide the required beat frequency.
3. The oscillator operates on the low frequency side. The oscillator operates at 230 Mc. The third harmonic of this is 690 Mc, which beating against the 700 Mc signal gives the 10 Mc I.F.

New Philco Converter

Diagram (Simplified) showing the triode first detector-oscillator circuit as used in the 1941 Philco Models, 41-608 and 41-609.

Note the Condenser between the cathode of the detector and the B+ lead of the first I.F. transformer, which prevents feed-back through the cathode circuit; also the Hartley Oscillator with grounded grid, and tuned plate load circuit.

The XXL tube is a new type designed by Philco engineers especially for this circuit. Advantages claimed are improved signal-to-noise ratio and reduced cross-modulation.

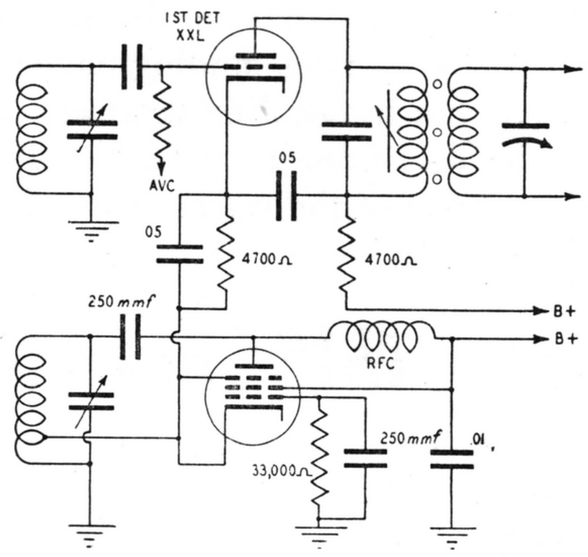

DATA COURTESY OF PHILCO

• *Section* 3

THE MYE TECHNICAL MANUAL

Half Wave and Doubler Power Supply Systems

P.R. MALLORY & CO. Inc.
MALLORY

HALF WAVE AND DOUBLER POWER SUPPLY SYSTEMS

Introduction

Transformerless sets of the A.C.-D.C. and Voltage Doubler types are of special interest to the service engineer due to the frequency with which they appear on the repair bench. This fact is not so much an indictment of their design as it is an indication of their popularity. Due to both low price and convenience of size this general type of receiver outranks all other types in number in use.

The underlying reasons for the frequent failure of the power circuit components of these types of receivers have been of considerable mystery not only to the service man but also to many receiver design engineers. Rectifier tube and condenser failures were the rule not many seasons past and seemingly without "rime or reason" replacement tubes and condensers of reputable manufacture repeatedly failed shortly after their service installation. It was not unusual to find both a defective or "dead" rectifier tube and a shorted or open filter condenser in the same receiver. Tube and condenser companies were individually placing the blame on the manufacturer of the other component, since it was impossible to tell which component had failed first. Fortunately such a condition no longer exists. Co-operative study of the problem by tube and condenser manufacturers has resulted in a satisfactory explanation of the causes of component failure and a number of precautionary design principles are now being incorporated in current receivers.

Until quite recently the "transformerless" type of receiver design was confined to the smallest and least expensive models. A number of interesting advances in both the condenser and tube art have recently influenced design and more pretentious models are being offered in larger table cabinets and small consoles with voltage doubler types of power supply circuits. In some quarters the introduction of these types of voltage doubler receivers has been questioned as an attempt to mislead the customer since the receivers do not employ a power transformer. However, it should be evident that any effort to provide the public with a given level of performance at a lower cost is in the public interest if it is accomplished by the application of sound engineering principles and the employment of high quality components.

The introduction of the dual rectifier in one envelope (type 25Z5) in 1933 caused a mild flurry of doubler set development and a number of receivers have appeared from time to time with a doubler circuit. The apathetic attitude toward this type of circuit was caused by the lack of suitable output tubes and high capacitance filter condensers necessary to realize its advantages.

The revival of interest in this type of power supply circuit has been occasioned by the following factors:

A. The availability of compact high capacitance dry electrolytic condensers.

Both the high power output type of A.C.-D.C. sets and voltage doubler receivers require higher capacitance condensers than other types of filter circuits. As will be shown later the A.C. ripple current which the condenser must pass is likewise higher than for conventional transformer type filter circuits. Formerly both cost and size prohibited the use of high capacitance units. The introduction of type FP* (Mallory Fabricated Plate) condensers early in 1938, brought to the radio industry a unit which provided the high capacitance required in a compact and inexpensive construction.

*Registered Trade Mark

B. The availability of vacuum tubes designed for economical series heater operation and high efficiency at relatively low plate voltages.

Since the voltage doubler and high output half wave rectifier provide plate supply power without requiring a power transformer, it is necessary to operate the tube heaters in series connection with the power line. When the 6.3 volt series of tubes requiring 300 milliamperes were the only tubes available a high value of series resistance in the form of a line cord resistor or high "wattage" resistor was required to drop the voltage to the required value. This resulted in the waste of a considerable amount of power as heat. Several series of vacuum tubes with higher heater voltage ratings at lower series current have appeared which have stimulated the design of series heater receivers. Not only has the heater current been cut in half but the power is now used in the tubes to produce useful electron emission rather than wasted in a dropping resistor as heat.

Half Wave Rectifier Operating Characteristics

The voltage doubler and other voltage addition systems depend upon the successive valve action of half wave rectifiers. Since possible service failures of these systems are common in both cause and effect to those encountered in the half wave rectifier, the characteristics of the half wave system will be described in detail.

While the subject of the theory of half wave rectification has received some analysis in standard radio textbooks, such discussions as are available either treat the subject in a general descriptive manner or present mathematical formulas whose applications to the practical case are involved and tedious. In such cases the assumption is made that the resistance of the rectifier tube and supply line are negligible compared with the load resistance. This is not the case under some conditions of use and it is felt that a presentation of the subject illustrated by characteristic curves of measurements made on a typical circuit will be of value. The available rectifier tubes for A.C.-D.C. set operation are sufficiently identical in operating characteristics to allow a single group of curves to be presented.

In Fig. 1A is shown a simplified diagram of a half wave rectifier with condenser input. When an alternating voltage is applied to this circuit the diode rectifier is conductive during that portion of the cycle over which its plate is positive with respect to the cathode. Assuming the condenser to have no initial charge, as at time of 0 of Fig. 1B, the current flowing in each of the two branch circuits C and R is the same as it would be if they were entirely separate until the condenser is charged to the peak voltage of the supply as at time (a). During this initial charging period the shape of the current wave flowing in the resistor is essentially sinusoidal and in phase with the input alternating voltage as shown in Fig. 1D from time 0 to (a). During this same time interval charging current is flowing into the condenser as shown in Fig. 1C from time 0 to (a). The current through the rectifier is the sum of these two currents and is shown in Fig. 1E. When the peak has been reached the capacitor will start to discharge through the load resistor but the resistor also continues to pass current from the line through the rectifier. As soon as the voltage drop in the load resistor due to the current discharge from the capacitor exceeds the instantaneous value of the input supply voltage, the anode of the rectifier becomes negative with respect to its cathode and it ceases to conduct. This occurs at time (b) of Fig. 1E. The capacitor continues to discharge through the load resistor with the current decaying exponentially as shown from time (b) to

FIGURE 1 VOLTAGE AND CURRENT WAVE SHAPES IN HALF WAVE RECTIFIER WITH CONDENSER INPUT.

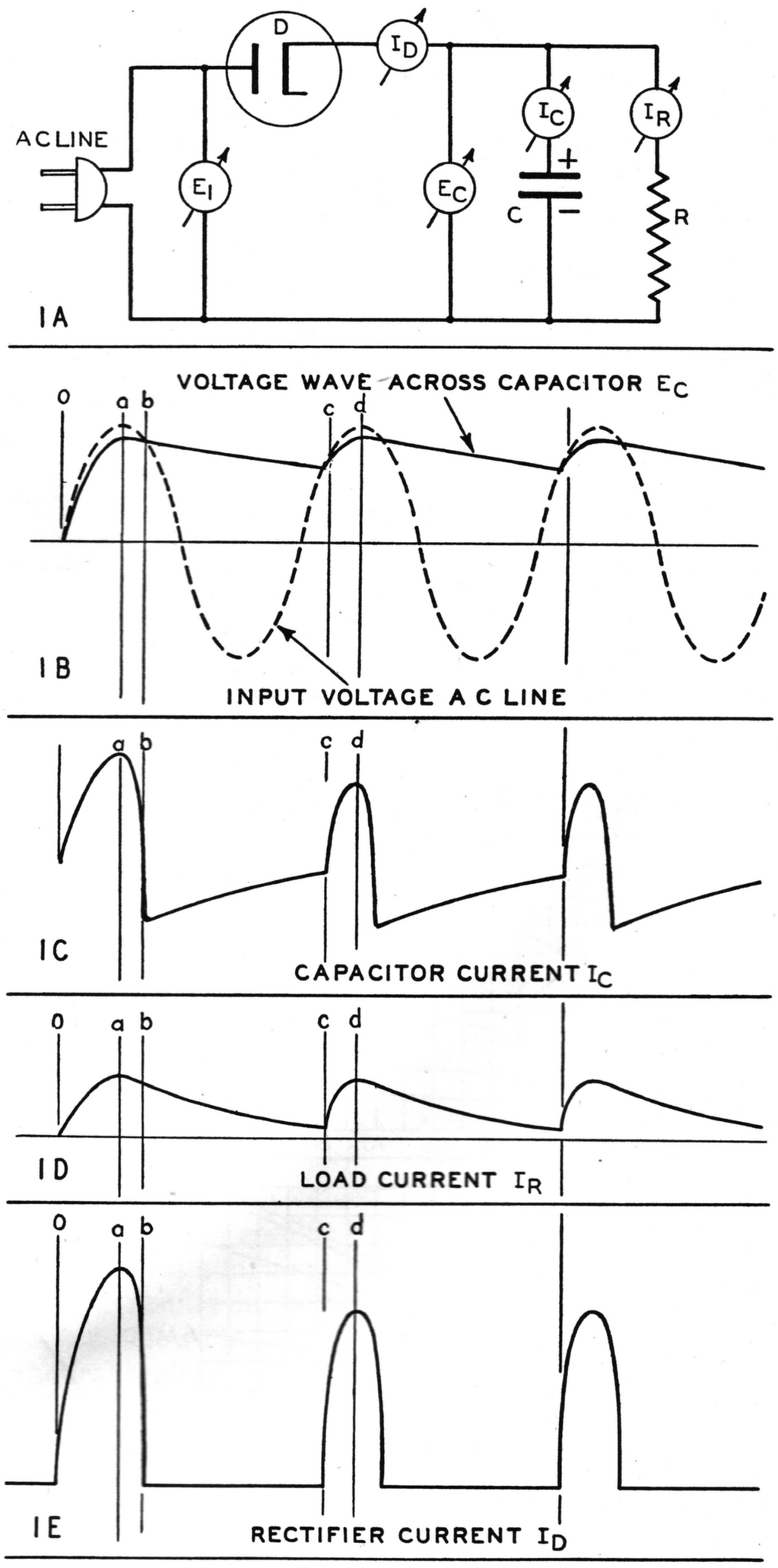

(c). During this time the voltage drops as shown from (a) to (c) in Fig. 1B. Since with the usual choice of circuit constants the capacitor is not completely discharged when the supply voltage again becomes positive, the start of charging current is delayed until the instantaneous supply voltage exceeds the capacitor terminal voltage. This occurs at point (c) of Figure 1B.

It will be observed that the wave shapes of both the current and voltage waves are far from sinusoidal and that the peak current through the rectifier tube may be many times the average or D.C. load current. The actual magnitude of these ripple currents and voltages are determined by the value of the input filter condenser, the size of the load resistor, and the supply line frequency.

Fig. 2 illustrates a series of measurements made with typical operating conditions. It will be noted that a line voltage of 117 has been chosen as standard since this value is representative of the average line voltage encountered in actual use. A series resistor of 30 ohms has been connected in the lead to each anode. The use of these resistors as a protective measure will be discussed later. Similarly the capacitor values of 5, 10, 20 and 40 microfarads are consistent with the current practice rather than the 4, 8, 16 and 32 series still retained in the tube data books.

Since the various ripple voltages and currents are seen from Fig. 2 to vary through wide limits with load current and with variation of input capacitance it is of importance to consider the limiting factors of performance and safety of operation of the tube and the condenser.

A. R.M.S. Ripple Current in the Initial Filter Condenser

The RMS ripple current flowing into the input filter condenser as measured by a thermocouple type of current measuring instrument is shown in the series of curves of Fig. 2B. There are two effects of this ripple current flowing in the condenser which must be considered to determine whether the operating conditions are safe for any particular capacitor, namely heating effect and tendency to reduce the effective capacitance by the formation of a film on the cathode plate of the capacitor.

FIGURE 2 HALF WAVE RECTIFIER CHARACTERISTICS

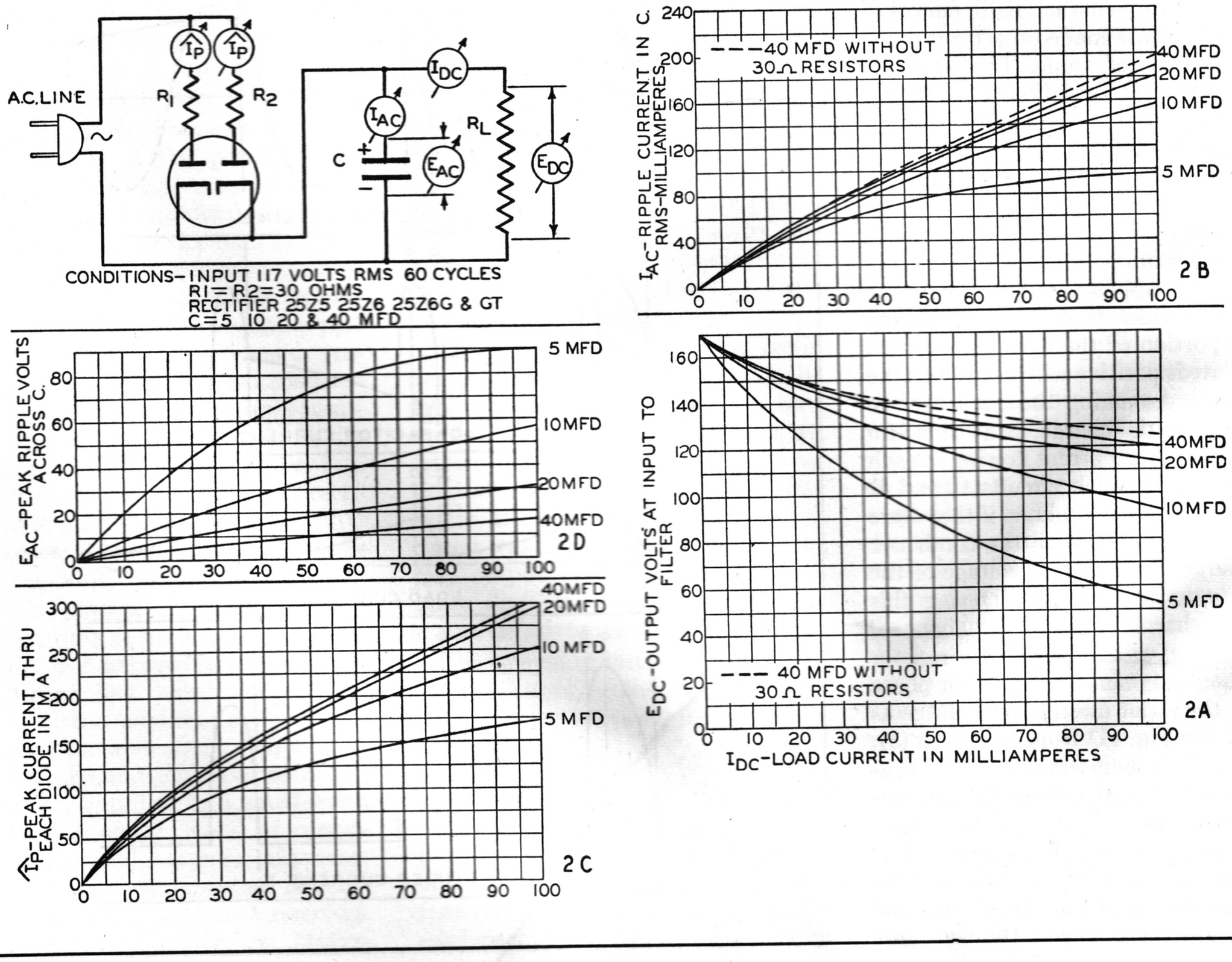

1. *Heating Effect of Ripple Current*

Electrolytic types of filter capacitors exhibit a series resistance characteristic at power line frequencies which, although of negligible effect on the filtering efficiency cannot be disregarded from the standpoint of heating effect. The RMS ripple current flowing through the series resistance of the capacitor causes a temperature rise which augments the usually high ambient temperature in sets of the A.C.-D.C. type. Such sets are generally housed in small enclosed cabinets having restricted ventilation capabilities. The ability of the condenser to radiate the heat depends upon its construction and also upon its position on the chassis with respect to other hot components such as rectifier and output tubes, location of ventilating louvres and presence of convection drafts.

It is generally conceded that a condenser in a metal can construction will radiate its internal heat more efficiently than a cardboard tube unit, and it is also evident that the input unit in a common cathode concentric wound type of construction should be on the outside of the roll and thus closest to the container.

If the temperature of the condenser is allowed to exceed approximately 90° Centigrade, the capacitor may become permanently damaged by a "run-away" characteristic in which the internal temperature of the capacitor is augmented by increased direct current leakage. This has been a frequent cause of capacitor failure in cases in which a receiver has been operated for long periods of time with restricted ventilation. It is for this reason that compact receivers should never be placed in locations such as in bookcases, etc., where free circulation of air will not occur.

Until quite recently, the lack of standardization of size and construction of capacitors for A.C.-D.C. and voltage doubler service has made it difficult to predict whether a given capacitor would give satisfactory service. Determination of this characteristic could only be made by measuring the ripple current heating by means of a thermocouple imbedded in a sample condenser, the condenser being life tested under conditions of similar ambient temperature. Fortunately this situation has been remedied by the introduction of standardized compact units as typified by the (Mallory) FP construction. This unit, with its fabricated plate design, hermetic sealing, and metal can construction has proved by extended life tests its ability to withstand both high ambient temperature operating conditions and high superimposed current ripple. For the condenser section on the outside of the roll of the FP condenser in applications discussed in this book it is permissible to allow 10 milliamperes RMS current ripple per microfarad in a 60-cycle half wave or doubler application with a 60° Centigrade ambient temperature. For the 25-cycle ripple condition, it is permissible to allow 8 milliamperes RMS ripple current per microfarad of input filter capacitance.

Condenser manufacturers have published permissible ripple current ratings for their particular units. It should be noted that most of these ratings are specified for the 120-cycle rating of the full wave type of circuit. In cases of high ripple (200 MA or more) the manufacturer should be consulted for recommendation of a particular type of construction.

With the foregoing in mind it is instructive to examine Fig. 2B with respect to the conditions of operation of the capacitor. It will be noted that the 5-mfd. curve exceeds the above recommended current for all values of D.C. load current beyond 25 MA. The 10-mfd. curve exceeds the limit for all values of load current beyond 50 MA. The curves for higher values, i.e., 20 and 40 mfd., exhibit no limitation within the limits of the curves. From the standpoint of ripple current alone it would appear that a very high value of input condenser should be specified. It will also be noted that a high value of input capacitor results in better regulation curves as shown in Fig. 2A. The upper practical limit of capacitor size is dictated usually by a balance of economic factors and performance requirements. Another factor enters the picture in the effect of the size of the input capacitor on the operating conditions of the rectifier tube. This will be discussed later under the subjects of peak rectifier current and rectifier-condenser failures.

2. *Effect of Ripple Current on Cathode Film Formation*

The electrolytic condensers employed are of the polarized type in which only the anode or positive plate has been formed or provided with the insulating film. The superimposed A.C. ripple tends to form a film on the cathode similar to the anode film during the portions of the cycle when current flows from the capacitor. This cathode film interposes a capacitance in series with the anode film capacitance and thus tends to reduce the effective total capacitance of the unit with continued application of high ripple current. In the older type of large smooth or plain plate condensers the capacitance of this cathode film was so high, due to the large areas of plate required per unit of capacitance, that the total effective capacitance was reduced very little as the result of cathode formation on high ripple. As the size of the capacitor is reduced by the employment of either etched or fabricated anode construction (a fabricated plate anode has approximately 1/10th the area of plain plate for the same capacity) the effect of cathode film formation on effective capacitance becomes very apparent especially if the cathode plate is a piece of plain foil. For this reason FP condensers specified for A.C.-D.C. or voltage doubler service are made with cathode plates of etched foil to obtain an effectively large cathode area and thus a higher cathode film capacitance for a given ripple current. This construction has proved a satisfactory answer to the problem.

B. Peak Ripple Current Through the Rectifier

Fig. 2C shows the variation of the peak current through each rectifier with size of input filter condenser and D.C. load current. In the circuit shown the total peak rectifier current for the tube which consists of two diodes in one envelope would be twice the values shown on the curves. A fact not usually considered is that the peak value of current through the tube can be many times the average

D.C. current flowing through the filter. The reason for this is evident from Fig. 1E in which it is seen that plate current flows through the rectifier for only a portion of the cycle and during this short time pulse enough energy must flow to restore the loss of charge of the filter condenser due to the load current. For each type of rectifier tube there is a maximum plate current rating. For the type 25Z5 or 25Z6 this rating is 500 milliamperes. If this rating is exceeded in normal continuous operation short rectifier life may result. This condition places a practical limit on the size of input condenser which may be safely used unless a series resistor is employed in the plate circuit of the rectifier tube to limit the peak plate current to maximum recommended value. The use of such a series resistor, while occasioning the loss of a few volts of plate potential, provides a protection to both tube and condenser which, it is predicted, will assure long life to A.C.-D.C. and voltage doubler sets. The incorporation of a 30 to 50 ohm resistor in older receivers will prevent premature failure of rectifier tubes or filter condensers and is to be recommended.

C. Peak Ripple Voltage Across Input Filter Condenser

The ripple or hum voltage across the filter condenser is of a wave shape similar to that shown in Fig. 1B. The magnitude of this voltage in a practical case is shown in the curves of Fig. 2D. It will be seen that the peak ripple voltage shows more variation with increasing capacitance than does the other characteristics shown in Fig. 2. Since the voltage wave form is dependent to a great extent upon the values of input capacitance and load current or resistance, it would at first appear that there would be no method of correlating the peak voltage with any of the other characteristics. In order to determine whether the condenser had a safe margin with respect to voltage, a vacuum tube voltmeter reading of the peak voltage would seem to be necessary. Fortunately it is possible for the practical case to arrive at a figure for peak voltage from a knowledge of the D.C. load current and the RMS ripple current flowing in the first condenser. Fig. 3A shows that for the case of high capacitance input the peak voltage is within 10 percent of the value which would be estimated on the assumption that both the ripple current and ripple voltage are of sine wave form. The practical significance of this fact is of value when considered in the light of the curves shown in Fig. 3B. From these curves it is evident that if the D.C. load current is multiplied by the figure 2.4, an approximation of the RMS A.C. ripple current will be obtained. This figure will give a conservative margin of safety since practical applications involve load currents of more than thirty milliamperes D.C. Thus it is possible to arrive at an estimate of all of the working conditions in a half wave rectifier circuit from a knowledge of the D.C. output voltage and current, or more simply the D.C. current alone.

Since the electrolytic condensers used for this service are normally of the 150-volt rating which are formed at 200 volts D.C., peak voltages will not be dangerous unless they closely approach this latter figure. In normal applications on 60-cycle supply with half wave rectifier systems, it is unusual for the D.C. voltage plus the peak

FIGURE 3 RATIOS OF CONDENSER VOLTAGE AND CURRENTS TO D.C. LOAD HALF WAVE

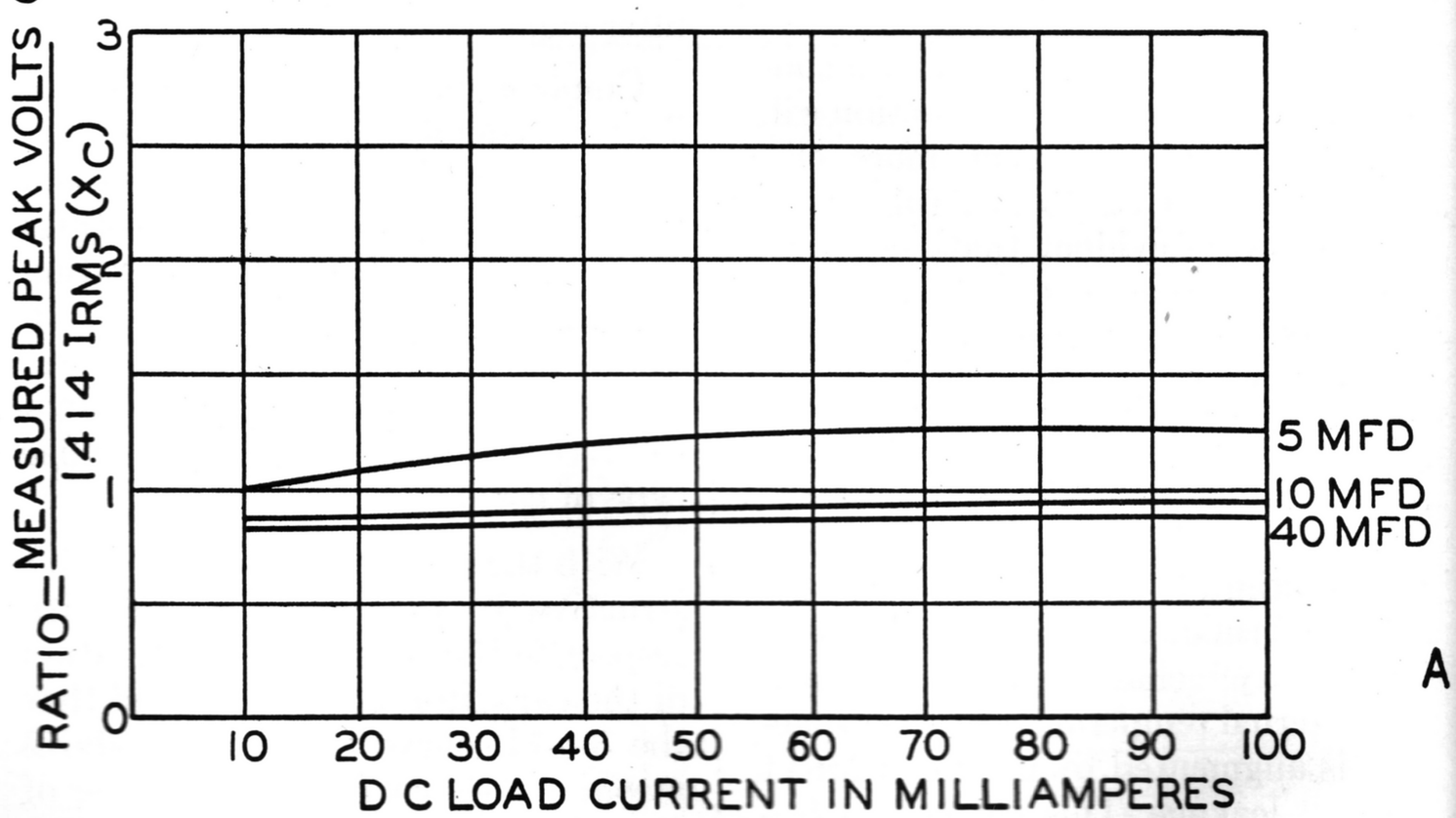

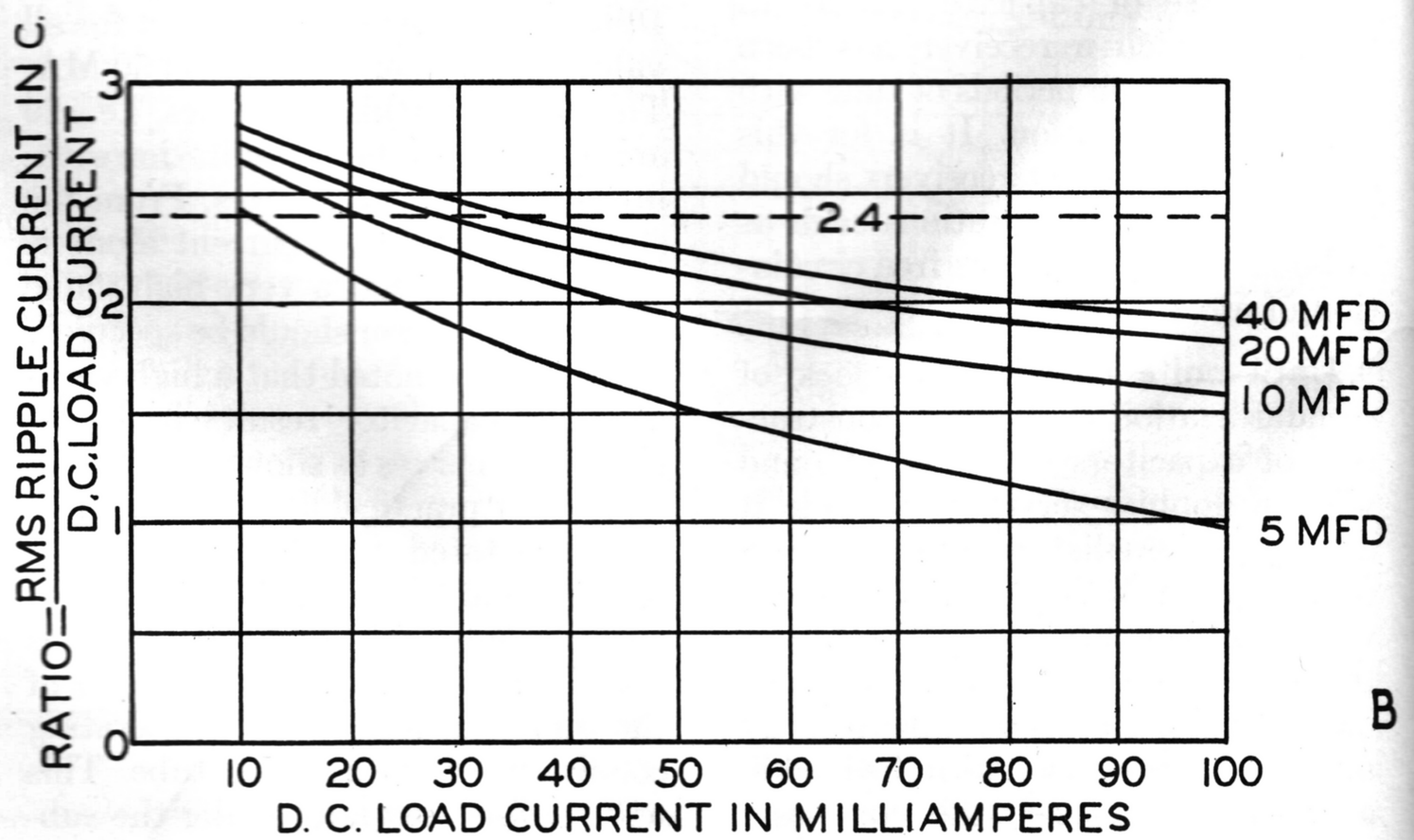

ripple voltage to approach the formation voltage of the anode film. This may be seen from Figs. 2A and 2D which when added give the peak voltage to which the input capacitor is subjected. In 25-cycle operation, on the other hand, there may exist conditions in which the peak ripple plus the D.C. voltage may equal or exceed the formation voltage of the anode film of the 150-volt unit. Such applications require the employment of a higher voltage rating. This arises from the fact that the reactance of the condenser is higher at the lower frequency. The peak conditions occurting in voltage doubler circuits will be considered later.

Voltage Doubler Power Supply Systems

A number of receivers have appeared recently in which the power systems employ several half wave rectifiers connected in such a manner as to add their rectified output to produce a D.C. voltage greater than the peak line voltage. This general type of power system has been given the name of voltage doubler although it produces twice line peak voltages only for the conditions of very high capacitor values and negligibly small load currents. A more appropriate name might be voltage addition power systems.

In analyzing these circuits it is evident that there are two general types in use of which a number of variations have appeared. The general classes might be given the names: (A) Symmetrical or Balanced Type and (B) Series or Common Line Type.

Recently these types have also been referred to as the full wave and half wave doublers respectively. These designations probably arise from the fact that the former exhibits a ripple frequency of twice the line frequency across the entire filter input while the latter impresses an input ripple of line frequency.

Examples of recent models employing voltage doubler power supply systems follow:

Type (B) Zenith: Model 6R485, Chassis No. 5672-P, Tube Complement 50Z7G-Rectifier, 12A8G, 35L6G, 12K7G, 12Q7G.
Model 6R481, Chassis No. 5675. Identical to Model 6R485, without automatic tuning feature.

Type (A) Galvin (Motorola): Model 61F, Tube Complement—25Z5, 25B6G, 25B6G, 6D6, 6A7, 6Q7GT.

Type (A) Farnsworth Television and Radio Corporation
Models: ATL-50, ATL-51, ATL-52, ACL-55, ACL-56, AKL-58, AKL-59.
Chassis: C2-1, C2-2, C2-1, C2-3, C2-3, C2-4, C2-4 respectively.
All of these models and chassis numbers embody the following Tube Complement: 25Z6GT, 25L6GT, 6SK7, 6SK7, 6A8GT, 6SQ7, 6H6.

Type (A) Crosley Radio Corporation: Model 719. Tube Complement: 6A8, 6SK7, 6P5, 6SF5, 25L6, 25Z6, 25Z6. Late in the season, Crosley added two models, No. 739 and No. 7739, which use the same Tube Complement as Model 719, but employing the series or half-wave doubler (Type B).

Type (B) General Electric: Models HJ905 and HJ908. Tube Complement: one each 12SA7, 12SK7, two each 12J5GT, one each 12SF5, or 12SF5GT, 25C6G, 6AB5 or 6N5, two each 25Z6G, or 25Z6GT.
General Electric Models H736 and H708. Tube Complement: 6SA7GT, 6SK7GT, 6Q7GT, 6J5GT, 25C6G, two No. 25Z6GT.

The Symmetrical or Full Wave Type of Voltage Doubler

This type of circuit shown in Figs. 4A and 4B will be recognized as the most common and is the one usually illustrated in tube data books. Fig. 4A is drawn in schematic form as it would occur in a receiver circuit diagram. Peak current limiting resistors R_1 and R_2 have previously been discussed in connection with the half wave rectifier. Filaments T_1 through T_4 represent the heaters of the other tubes of the receiver. Resistor R_3 is the line dropping resistor previously mentioned. To follow the voltage doubling action this schematic diagram has been simplified in Fig. 4B with only the portion of the circuit essential to its action retained.

The circuit action may be explained as follows: When the line voltage polarity is such that point 1 is at a positive potential with respect to point 2 a current will flow in the direction of the solid arrows through rectifier tube T_1, thus charging condenser C_A so that point A is positive with respect to point O. During this half period no current will flow through the rectifier tube T_2 since its plate is then negative with respect to its cathode. During the next half cycle, current will flow only through T_2 since point 2 is then positive with respect to point 1 and charging current will flow as shown by the dotted arrows charging condenser C_B negatively with respect to point O. The potential difference between points A and B (if the condensers did not discharge) would be twice the line peak voltage. Actually one condenser is discharging through the load while the other is being charged, in much the same manner as the input condenser discharged in Fig. 1B during the alternate half cycles. Thus if the dotted sine curve of Fig. 5 represents the line potential of points 1 and 2, the curves A and B will represent the potentials of A and B respectively with regard to O. The potential difference between A and B is therefore obtained by adding the curves as shown by curve E (Fig. 5) which represents the voltage input to the filter. It will be seen that although the condensers are charged for only a portion of the half cycle and thus the ripple frequency occurring across the individual condensers is of line frequency, the voltage fluctuations occurring across the entire circuit leading to the filter is double the line frequency. In this regard the symmetrical type of doubler is similar to a full wave rectifier in that the hum frequency is twice the line frequency. If capacitors C_A and C_B are not approximately equal in capacitance the ripple voltage across one of them will overbalance that across the other and a hum component of line frequency will be evident.

It has usually been assumed that the two condensers of a doubler circuit of this type will be identical in capacitance value and such is usually

FIGURE 4 SYMMETRICAL OR BALANCED TYPE OF VOLTAGE DOUBLER

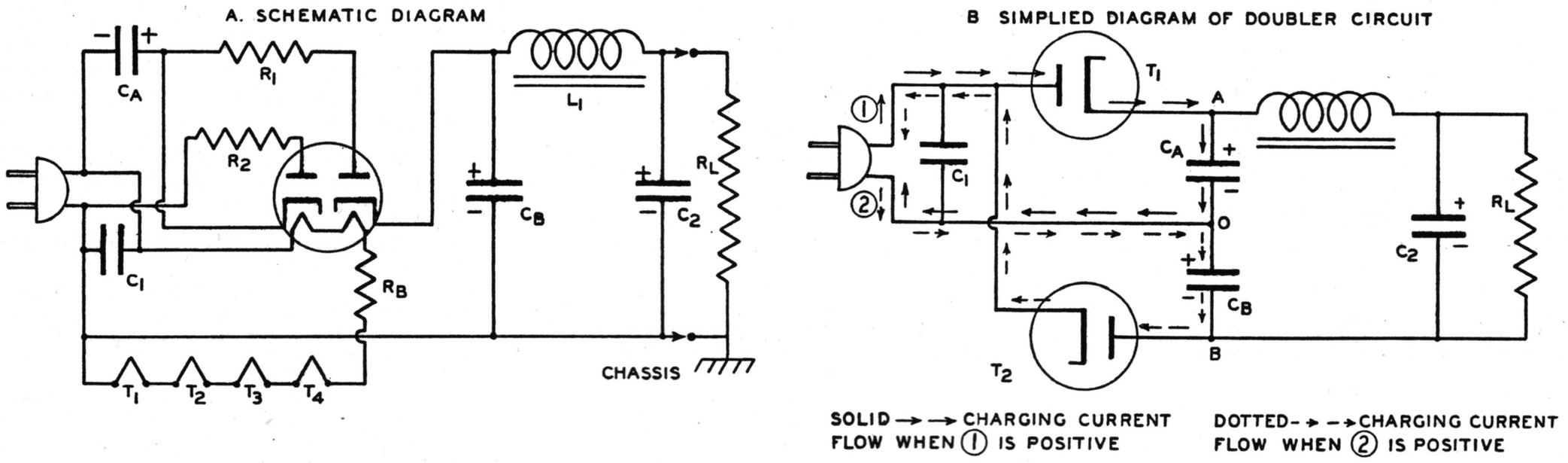

the case. At least one circuit has appeared, however, in which condenser C_B was made twice the capacitance of C_A.

Typical Operating Characteristics of the Symmetrical Doubler

In Fig. 6 are shown a series of measurements of a typical voltage doubler circuit of this type. The data was obtained with an average tube and type FP condensers of 150-volt D.C. working rating as C_A and C_B. It will be noted that the curves are in general quite similar to the half wave rectifier characteristics shown in Fig. 2 except for the higher output voltages obtained. It is of interest to observe that the ripple currents in the individual condensers bear a slightly lower ratio to the D.C. load current than in the half wave case and that the "rule of thumb" ratio of 2.4 is generously safe.

The peak voltage values of Fig. 6D should be added to half the D.C. voltage values of Fig. 6A to obtain the maximum voltage to which the individual condenser are subjected for any given load condition. It is evident that for the conditions shown the 150-volt type of unit which will accommodate a value approaching 200-volt peak is safe even for the case of the 5-mfd. units. However, the use of 5-mfd. units would not be safe from the standpoint of ripple current.

The type 25Z5 tube is rated for a maximum D.C. load current of 75 MA for doubler service and although the curves of Fig. 6 have been extended to 100 MA it has become the practice to employ two rectifier tubes with their elements in parallel if the load current requirements exceed 75 MA.

The peak diode current can become quite high for high values of input capacitance as shown in Fig. 6C. Conditions of operation should be so chosen as to keep this value below 450 MA peak per plate for the type 25Z5 or 25Z6 tube. The use of the protective series resistors assists in keeping this current within safe limits.

Operating Conditions of Capacitors in Symmetrical Doubler Circuits

Assuming the capacitors of Fig. 4 to be of equal size it is evident that the conditions under which the individual units operate are similar to the half wave rectifier application as explained under operating characteristics. Since the voltage across the individual condensers are added in series, the voltage rating of these con-

FIGURE 5 ADDITION OF POTENTIALS IN SYMMETRICAL DOUBLER SHOWING RIPPLE FREQUENCY OF DOUBLE SUPPLY FREQUENCY

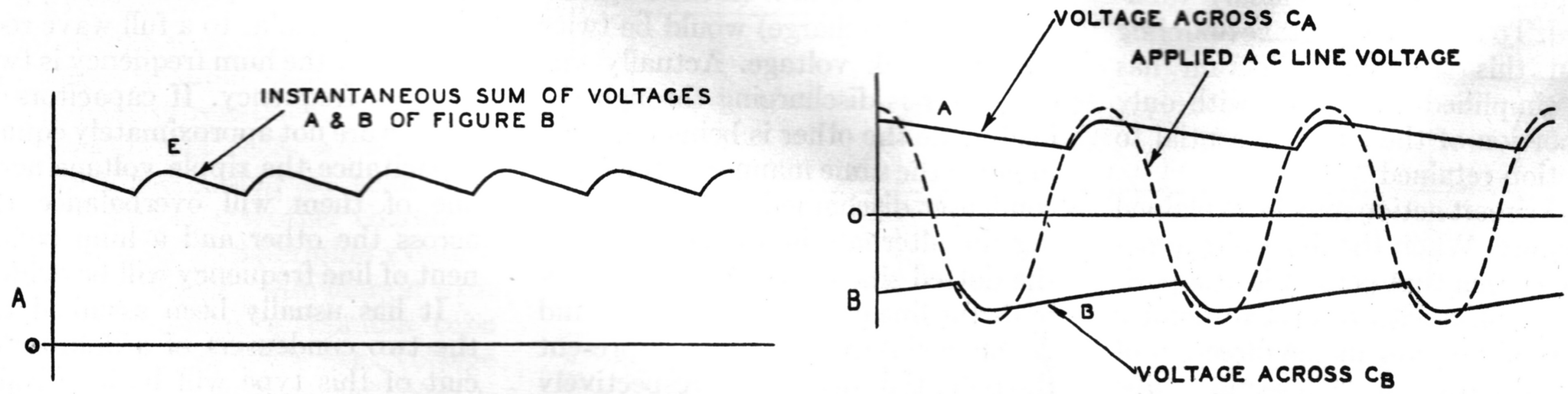

FIGURE 6 SYMMETRICAL DOUBLER TYPICAL CHARACTERISTICS

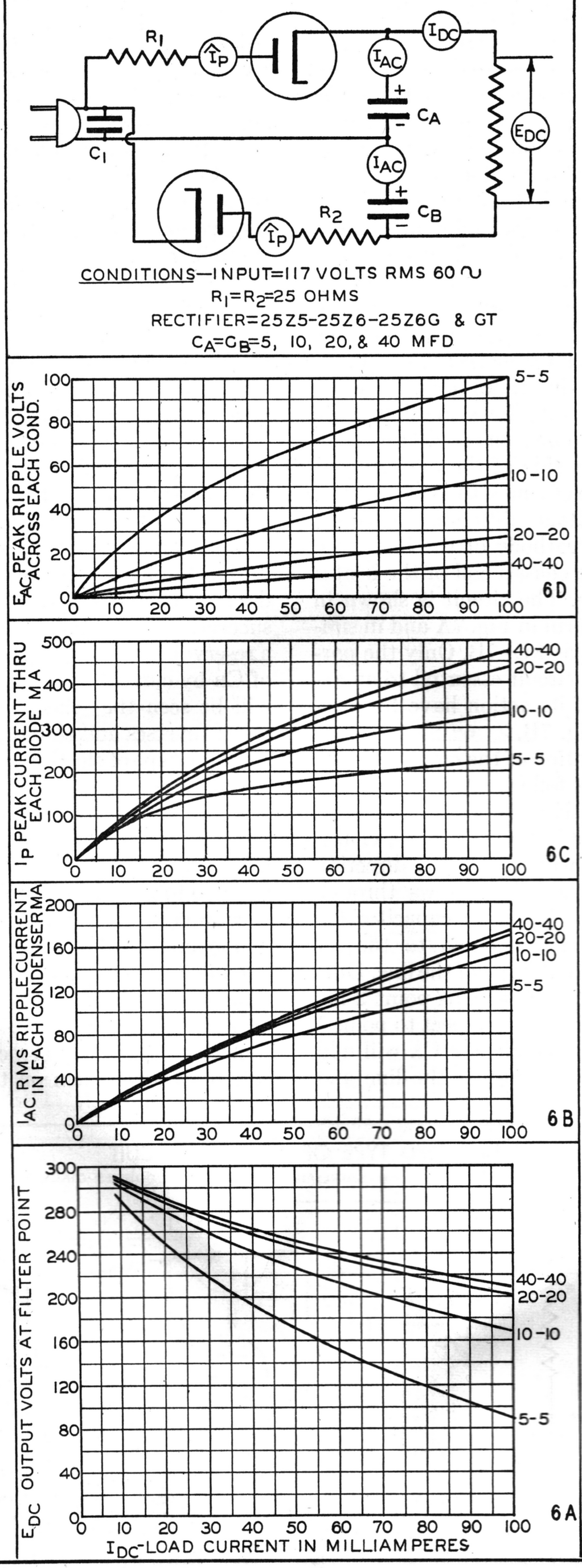

densers need be no higher than for the half wave rectifier applications, 150-volt working condensers are usually specified for this type of circuit. Such condensers are safely rated for all except unusual conditions of extremely high ripple peaks as might occur with low capacitance values and 25-cycle supply lines.

It will be noted that condenser C_B has its cathode connected to the chassis and thus if it is of metal can construction the unit may be directly mounted on the receiver chassis. Condenser C_A, on the other hand, must have its can insulated from the chassis and be suitably covered to prevent accidental contact of any grounded parts with the can of the condenser. One side of the power line is connected to the junction of these two condensers designated as point O in Fig. 4B. Since either side of the power line circuit may be grounded depending on the direction in which the attachment plug is inserted in the power outlet, it is evident that care must be taken in the design of transformerless sets such as the A.C.-D.C. and doubler types from the standpoint of shock and fire hazard.

The output condenser of the filter (C_2 of Fig. 4), must of course be rated at a value determined by the full output of the doubler less the filter drop and is usually a 250-volt rated unit.

Considerations of Circuit Returns and Power Line Grounding in the Symmetrical Doubler

Of importance from the performance standpoint is the effect of circuit returns and power line grounding conditions on hum pick-up in the audio circuits and hum modulation of the oscillator. Either the metal chassis or a negative bus wire is made the return point for the RF, IF and audio grid circuits as well as their respective cathode or cathode bias circuits. The heaters of all these tubes are connected in series with a suitable voltage dropping resistor across the power line. In half wave circuits such as are shown in Figs. 1 and 2 the power line can readily be connected directly to

the return side of the grid circuits (negative side of filter output), if suitable protective measures are taken to reduce shock and fire hazard. In these circuits the succession of heaters starting from the chassis is usually as follows: Second detector at ground on chassis, then first detector, if of the converter type, or oscillator if of the separate tube type, then in succession the other heaters in order of the audio and radio gain until the output tube and the rectifier are found at the other end of the series string. By this method the D.C. and A.C. differences of potential between the heaters and their respective cathodes are kept low for the tubes most likely to introduce either audio or carrier modulation hum.

In the symmetrical doubler circuit of Fig. 4A it will be seen that there exists a D.C. voltage difference of half the B supply voltage between the chassis and the first heater of the series string T_1 and that upon this D.C. potential difference is superimposed the ripple voltage of C_B. Fortunately modern tubes have very low cathode to heater leakage as well as improved heater constructions which keeps this source of hum at a minimum. As mentioned above certain recent receiver models employing this type of doubler circuit have departed from the usual symmetry of capacitance and have made C_B twice the capacitance of C_A. This reduces the RF impedance between chassis and power line, as well as reducing the ripple voltage between heater and cathode of the first tube in the series string.

Common Line or Series Line Feed Type of Doubler Circuit

Another general type of voltage doubler circuit has been variously called the common line, series line feed type, or half wave doubler, is shown in Figs. 7A and 7B. This circuit operates in a somewhat different manner from the one just described and might be designated as a voltage addition or multiplier circuit rather than a doubler circuit. It was proposed prior to 1933 and has found occasional application since that time. It will be noted that this circuit allows one side of the power line to be connected directly to the negative side of the filter output and thus overcomes the difficulty of a high voltage difference between heater and cathode of the high gain tubes at the chassis end of the heater series string. The circuit is shown in schematic form in Fig. 7A and in simplified form as Fig. 7B. Only the portions of the circuit essential to an explanation of its action have been retained in Fig. 7B.

The operation of the circuit may be explained as follows: Assuming point 1 to be positive with respect to point 2 during the initial half cycle, charging current will flow in the direction shown by the solid arrows through rectifier tube T_1, until capacitor C_A assumes a charge equal to the instantaneous potential of the line. During the next half cycle as point 2 becomes positive with respect to point 1 the charge of condenser C_A will add its potential to that of the line and current will flow through rectifier tube T_2, charging capacitor C_B to a potential equal to the sum of the charge in C_A plus the line peak. The path of this action is shown by the dotted arrows. This action would result in a charge of condenser C_B of twice the peak line potential if it were not for the fact that this condenser begins discharging through the load the instant that current starts flowing through rectifier tube T_2. A cursory analysis of this circuit would indicate that since current seems to flow in both directions through capacitor C_A, as shown by the solid and dotted arrows, a non-polarized type of electrolytic condenser would be required. This is not the case and it is possible to use a standard polarized type in this position. After the steady operating condition is reached the net charge, which capacitor C_A receives during the half cycle when T_1 is conductive, balances its discharge on the succeeding half cycle, since C_A acts as a reservoir to supply the loss of charge of C_B by current through the load. It will be seen that the polarity of C_A never reverses and thus a polarized or common type of electrolytic condenser may be used.

Fig. 8 shows the general nature of the voltage and current wave shapes in this type of doubler circuit. These are seen to be quite dissimilar to those encountered in the half wave rectifier and symmetrical or full wave doubler circuits and a word or two of explanation may be in order. The shape of the pulses for the first two cycles are somewhat conjectural since it is difficult to observe them on the cathode

FIGURE 7 COMMON LINE OR SERIES LINE FEED TYPE OF DOUBLER CIRCUIT

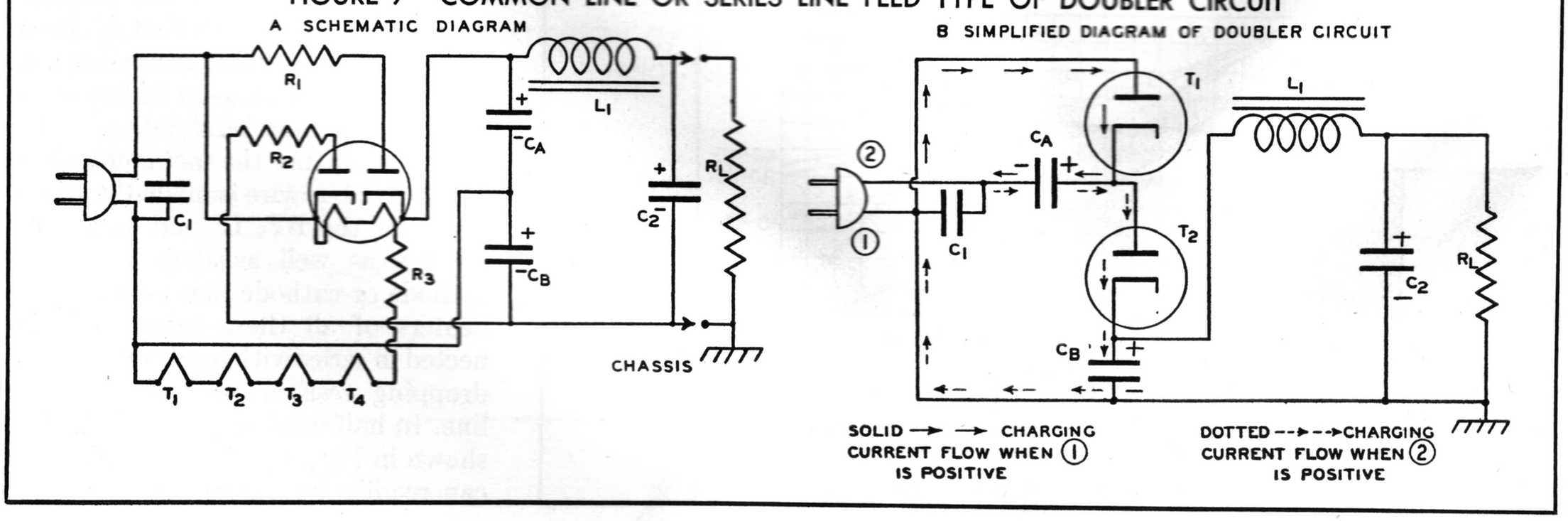

FIGURE 8 VOLTAGE AND CURRENT WAVE SHAPES IN COMMON LINE TYPE VOLTAGE DOUBLER

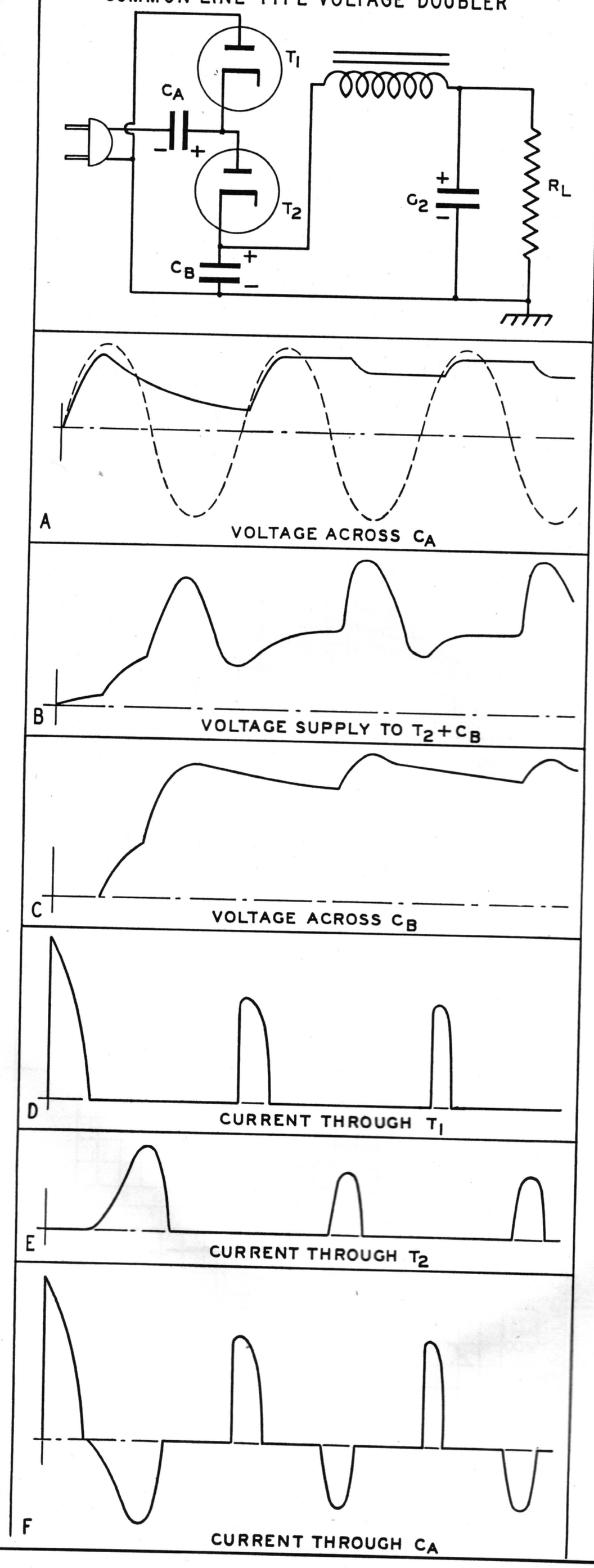

ray oscillograph without elaborate transient sweep devices. After the steady slate operating conditions have been reached, the charging current pulses into condenser C_A (through T_1) are of very short duration since it is only necessary to restore the loss of voltage occasioned by the transfer of its charge to C_B during the portions of the succeeding half cycles when T_2 is conductive. The discharge pulses from C_A are of longer duration since current not only flows into condenser C_B but also into the load resistor during this time period. A condition of equilibrium is reached when the area of the charge pulse is equal to the area of the discharge pulse and then, due to the difference in time duration of the pulses, the current wave may be quite assymetrical as shown in Fig. 8F.

Typical Operating Characteristics of the Series Line or Half Wave Doubler

Unlike the circuits previously discussed, this doubler has quite dissimilar functions for the two capacitors C_A and C_B. C_A acts as a reservoir of energy and adds its charge to the line during the succeeding cycle. It contributes little to the filtering action and therefore we need only concern ourselves with its effect on output and regulation. C_B is similar in its function to the input filter condenser of the half wave A.C.-D.C. circuit of Figs. 1 and 2 except for the higher working voltages encountered. Unlike the symmetrical doubler, the voltage ratings of C_A and C_B need be similar since C_A is never subjected to an instantaneous voltage greater than line peak plus the ripple voltage shown in Fig. 9C. The average or D.C. voltage on C_A approaches line peak only for the conditions of low D.C. load currents and high values of capacitance in both units. For these reasons it is evident that C_A may, for typical operating conditions at 60 cycles, be specified as a 150-volt rating, especially if its capacitance is high, i.e., 30 or 40 mfd. Capacitor C_B, on the other hand, is operating with the full D.C. output voltage of Fig. 9A plus the peak ripple shown in Fig. 9E. It must therefore carry a working volt-

age rating of 250 or 300 volts, depending on load current and voltage.

In the series of curves shown in Figs. 9A, B, C, D, E, and F, the value of capacitor C_B has been fixed at 40 mfd. as being a representative value from the standpoints of regulation and ripple voltage (hum). As previously stated, it will be observed that the value of the line series condenser C_A has only a minor effect on the ripple voltage and RMS current conditions of C_B. The ripple current in C_B again does not exceed the "rule of thumb" value of 2.4 times the D.C. load value discussed for the half wave rectifier case and consequently this estimate of working conditions provides a generous safety factor.

The conditions of operation of the line series condenser as shown in Figs. 9B, C and D distinguishes this general type of circuit from those previously discussed. It will be noted that the RMS ripple current through this unit as shown in Fig. 9B is much higher in proportion to the D.C. load current than for either of the other types of circuits. The ripple current for low values of load current is seen to approach a value of 3.2 times the D.C. current. This value has been chosen as a convenient figure which again provides a generous safety factor when considering load currents of practical usefulness such as 50 MA or more. It will be noted that low values of capactance should not be specified for condenser C_A wherein the current exceeds the value of 10 milliamperes per microfarad previously cited as safe for the type FP capacitor. Other considerations, such as regulation and output voltage, which would influence the choice of this capacitance value, would also result in a capacitor value which would lie in a safe operating region as far as ripple voltage and current are concerned. An upper limit of capacitance is determined only by the effect of capacitance on peak ripple current through the rectifier as shown in Fig. 9D. In this instance the D.C. current limit of 75 MA is reached before the peak ripple limit of 450 milliamperes. As previously stated it has become standard practice to employ two rectifier tubes in parallel for the higher D.C. load current conditions.

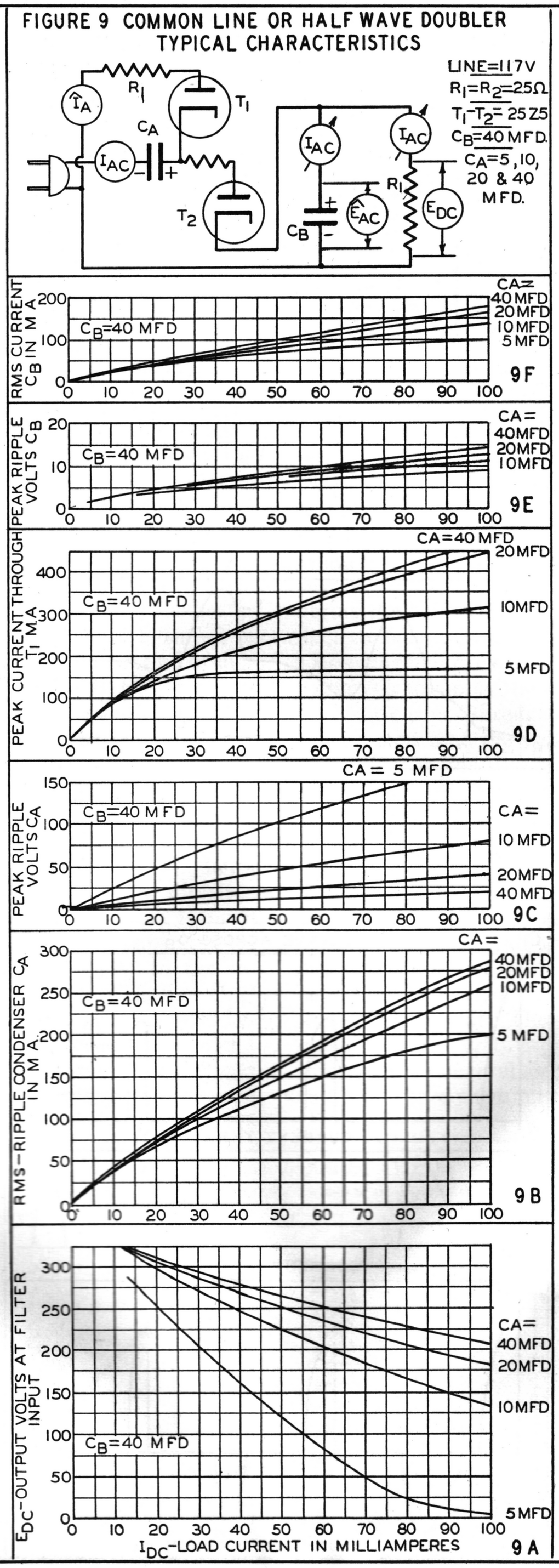

Series Line Feed or Half Wave Doubler with Common Cathode Type Condenser

An interesting variation of the type of doubler just discussed is the circuit of Figs. 10A and B. This arrangement of circuit components makes it possible to combine all of the filter capacitors in one common cathode type unit. The resulting saving of both space and economy of construction are obvious. In this case the metal can of a condenser of the FP type can be mounted directly on the chassis and it is not necessary to provide insulation of the condenser can as in the case of the high side condenser of the doublers previously discussed. Since both C_A and C_B carry ripple currents of the magnitudes shown in Figs. 9B and 9F, the ability of the particular type of condenser construction to adequately radiate the heat occasioned by the flow of this ripple current through the series resistance of the condensers, should be considered in the choice of a suitable unit. When these units both having ratings of 40 mfd. and the D.C. load current does not exceed 75 MA, it is possible to combine them with the output filter unit in a single condenser of the type FP construction.

It will be noted that this circuit interposes between the heater and cathode of the first tube in the series string the terminal voltage of condenser C_A. Since there is superimposed upon the average voltage a peak ripple as shown in Fig. 9C it is obvious that the value of C_A should be made as high as is practicable not only to keep this ripple at a minimum but also to provide a low impedance path between the chassis and the power line for both radio and audio frequency currents.

Voltage Multiplier Circuit

An interesting extension of the principles involved in the half wave type doubler circuits of Figs. 7 and 10 is shown in Fig. 11. In this case the principle does not stop with a doubling of the voltage but is extended to cover any desired multiple of the line voltage. Condenser C_1 operates in the same manner as condenser C_A of Figs. 7, 8, and 9, and delivers its charge plus the line peak voltage of the succeeding cycle to condenser C_2. This condenser adds its contribution of double voltage to the line voltage on the next half cycle when diodes D_1 and D_3 are conductive. This action continues in chain fashion through condensers and diodes 3, 4, 5, and 6 in turn. It might at first appear as though the chain of rectifiers when conductive would short circuit the charging action. This is not true because, once the series of condensers are charged, current from the individual rectifiers flows for only that portion of the cycle necessary to restore the loss of charge from the condensers due to current through the load. Thus, after the steady state conditions are reached, condenser C_1 is charged almost to line peak, condenser C_2 almost to twice line peak, etc. It is obvious that condensers C_1, C_3, C_5, and C_N, may be combined in one common cathode unit with proper attention given to the required voltage ratings of the individual sections. Similarly condensers C_2, C_4, and C_6 may be combined in another or second common cathode type single unit.

This circuit has been included here more for its interest as an extension of the principles discussed than as a suggested practical power supply system. Those familiar with the technique of the art of constructing surge generators for lightning research will recognize similarity of this circuit with the individual charge and series discharge methods employed to produce very high voltages. A practical limitation of a chain circuit of this type is the fact that if the tubes have their heaters connected in a series string across the power line there will exist dangerously high potential differences between heaters and cathodes of the rectifier at the high voltage end of the system. This difficulty of course might be obviated by the use of heater supply transformers but this would destroy the simplicity of this system.

FIGURE 10 SERIES LINE FEED DOUBLER WITH COMMON CATHODE CONDENSER

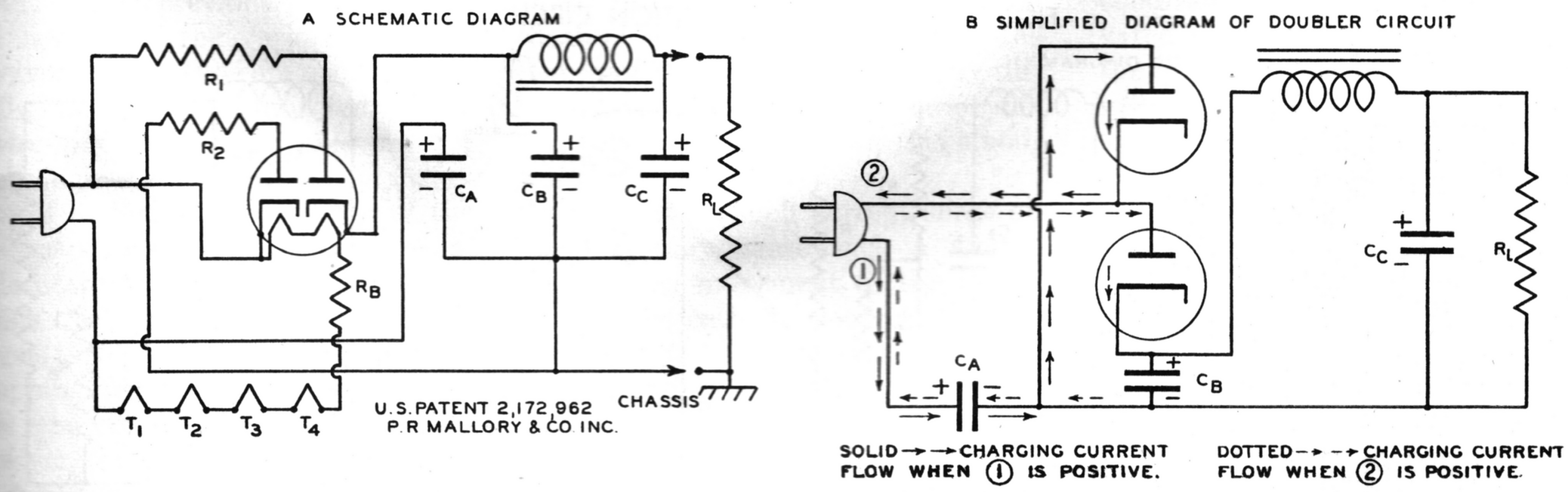

FIGURE 11 VOLTAGE MULTIPLIER CIRCUIT

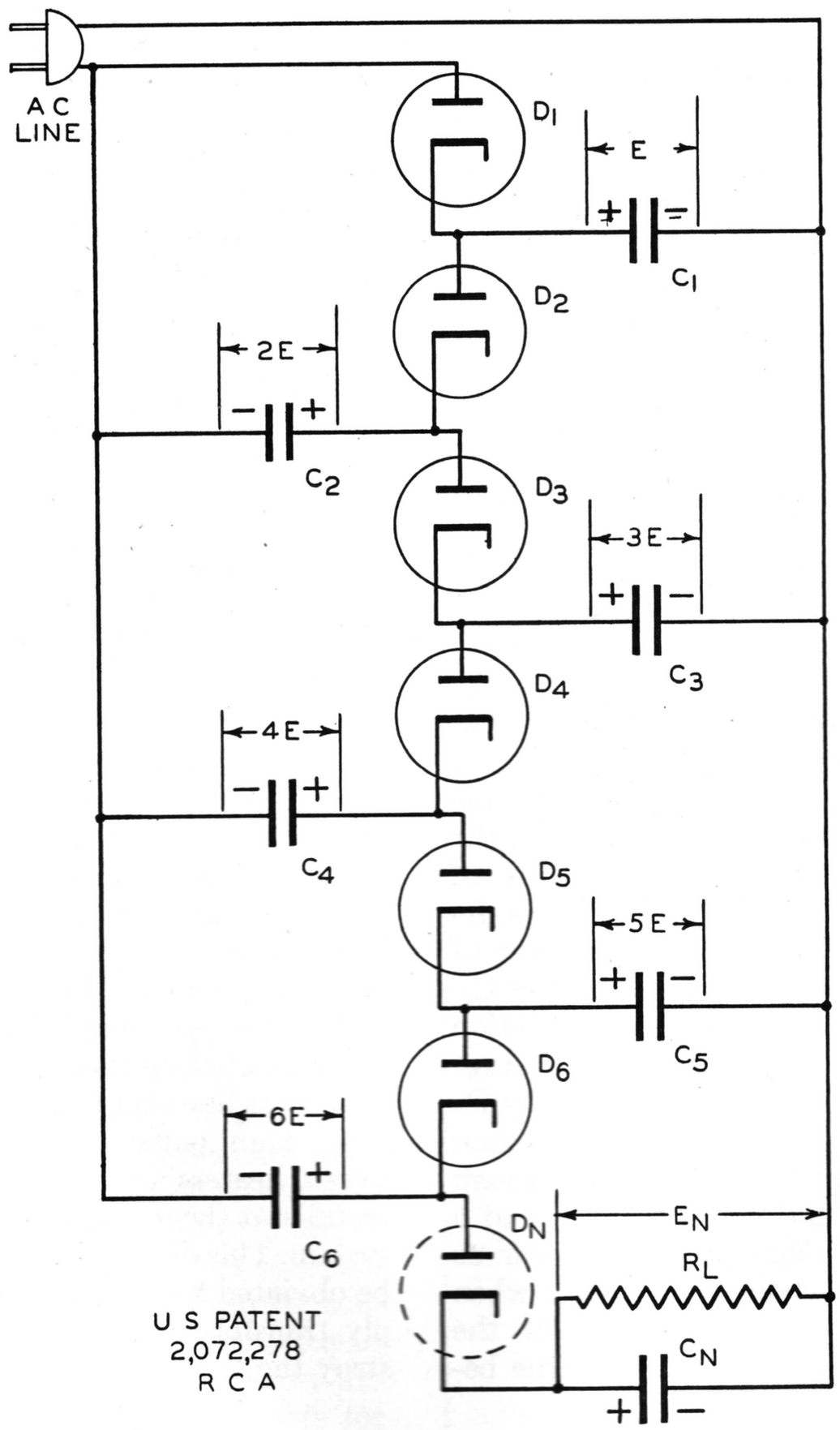

Voltage Addition and Other Series Connected Heater Power Systems

While the intention of this chapter was simply a study of transformerless power circuits, it may be of interest to indicate a recent trend in the use of the principles discussed, in combination with greatly simplified transformer constructions.

The introduction of high voltage heater type rectifier and output tubes as well as the availability of a complete line of tubes with 150 MA heaters makes it possible to pick receiver complements which do not require an excessive amount of series dropping resistance to operate directly across the power line. Since the insulation and consequently the voltage breakdown between heaters and cathodes has been successfully increased especially in rectifier and power tubes to a value which will withstand B potentials of several hundred volts, it is now possible to construct an economical power system in which the heater power has been removed from the secondary of the transformer and placed on the line side. In addition to this it is only necessary to provide for a portion of the B power from the transformer since by the voltage addition principle the power line may be used with one rectifier tube to supply a portion of the B voltage. A system of this type is shown in Fig. 12. Fig. 12A shows a schematic diagram with all the usual components and connections. Fig. 12B shows this same sys-

FIGURE 12 VOLTAGE ADDITION CIRCUIT

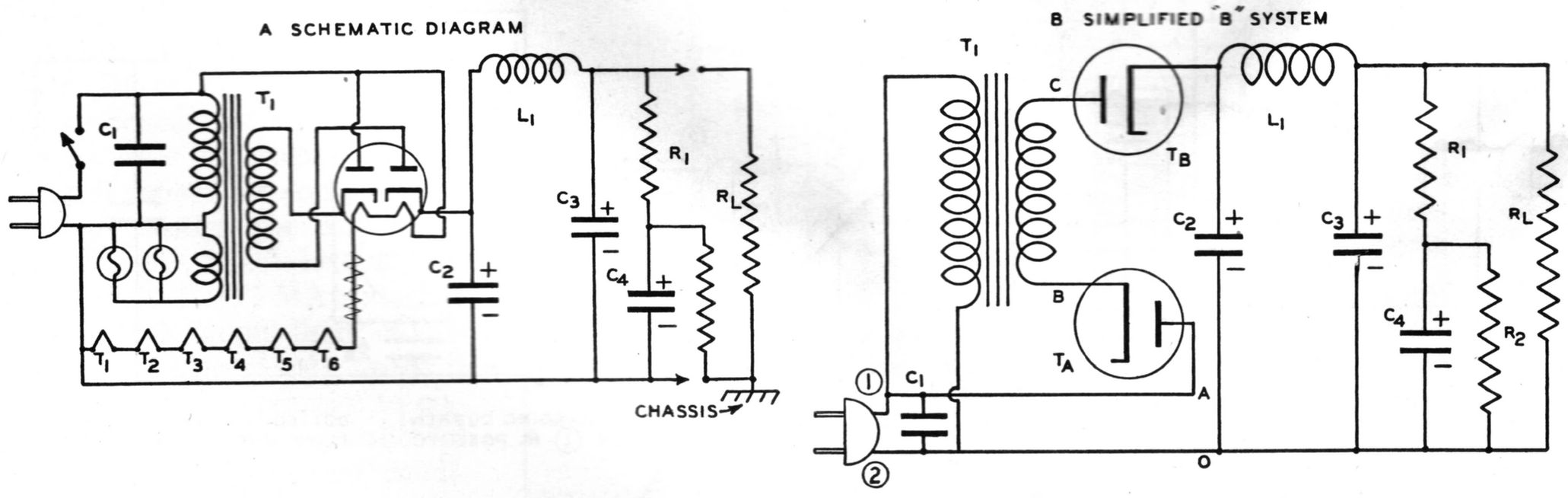

tem simplified to include only the portion concerned in the derivation of the B voltage.

The operation is as follows: For the half cycle for which input terminal 1 is positive with respect to terminal 2, there appears a voltage of line peak between points O and A in series with a voltage between points B and C, determined by the turns ratio of transformer T_1. Since at this instant both rectifiers T_A and T_B are conductive, filter condenser C_2 receives a charge determined by the sum of the peak voltages. Assuming these voltages to be equal it is obvious that the power requirements of the transformer need be only half the B supply power. In this manner a receiver of fairly high power output can be built with a transformer no larger than the usual audio frequency interstage or output transformer. Naturally such a system must comply with the requirements of A.C.-D.C. receivers as regards both shock, and fire hazards.

In Canada there have recently appeared a number of receivers which have been called H.V.H. sets. The initials refer to "high voltage heaters" which are connected in series across the power line. The B supply system in this case has been made of the conventional center tapped secondary full wave type and the simplification from an economy standpoint results from the absence of any low voltage windings on this transformer. In this case there is no conductive connection between the power line and the chassis or circuit wiring. The Hydro-Electric Power Commission of Canada has approved such receivers as complying with the Canadian safety code. With the introduction of tubes operating with 117-volt heaters, power systems similar to those discussed may well represent a trend in the ever-present urge to provide the public with more radio entertainment at less investment.

Component Failures in Transformerless Power Systems

As mentioned in the introduction, the number of service failures of A.C.-D.C. receiver components exceeds all other types. Most of these failures occur in receivers manufactured some seasons ago before a thorough understanding of all of the operating conditions was widespread among design engineers. With no intention of condemning either the design or the production of the older receivers, it would be of value to outline the various causes of component failures with suggested remedies to obviate their recurrence. Since the phenomena involved apply to all of the systems discussed no particular reference will be made to any one type of power supply system unless a particular feature is pertinent.

Heater Circuit Failures

As has been previously pointed out, the heaters of the various tubes of receivers of this type are connected in series and in turn connected to the power line with a suitable voltage dropping resistor. With the introduction of higher voltage ratings of the heaters of these series operated tubes, it is possible to design a receiver in which the sum of the heater voltages equals the line voltage, so that a series dropping resistor is unnecessary. Since this removes one component from the receiver, there is a natural temptation to design in this direction. However, when this is done a series of phenomena are likely to occur in service which may result in one of two types of tube failures. The cold resistance of the heater circuit is considerably less than the final hot resistance, especially if the heaters are of tungsten wire. The ratio of hot to cold resistance may be as high as 7 to 1. Thus when the receiver is turned on a sudden rush of current occurs which may cause violent mechanical movements of the heater within the cathode sleeve. Since certain heaters of widely different voltage rating may possess different thermal lag characteristics, a disproportionate voltage distribution may occur during the heating period. This situation is further complicated by the fact that for certain types of tubes the heater is an alloy rather than a tungsten wire and possesses a different temperature coefficient. Another factor of importance concerns itself with the method of heater construction. Both folded and reversed coil heaters are in general use and the tubes of the same type made by different manufacturers may be of dissimilar construction from this standpoint.

The sudden high current surge on starting may cause such a violent mechanical movement of the heater within the cathode sleeve that short circuit to the cathode or open circuit may occur. If this happens in a tube near the grounded or chassis end of the filament string, the result is merely a defective tube. If it occurs in the rectifier or output tube at the high end of the string, it may place 117 volts A.C. directly across the initial filter condenser in the case of an A.C.-D.C. set or across one of the doubler condensers if the symmetrical type of doubler is involved. The subsequent failure of both tube and condenser may be diagnosed by the service man as a condenser fault rather than a heater failure in the tube.

The condition which is described can be aggravated by the fact that localized heating of the cathode surface may result in the event that the power has been turned off for a short interval of time and the cathode has not cooled down uniformly. Under these conditions there is a possibility that a localized hot spot on the cathode may result in cumulative overheating, since all of the current will be comprised of the emission from the single spot and will, of course, cause a terrific concentration of heat. This condition will, naturally, be aggravated by the presence of any gas in the tube, since the heavy positive ions will bombard this same cathode spot and in such a chain of events back emission may occur from the overheated anode adjacent to this cathode hot spot.

For these reasons some tube and receiver manufacturers have determined a minimum value of series resistance of low temperature coefficient to be used in any series filament string to restrict the high starting surge. This minimum resistance should be in the neighborhood of 50 ohms or more.

A companion type of trouble, which while not so serious from an economic angle, is nevertheless very aggravating, is the frequent failure of dial or panel lights. In the earlier receivers these lights were either placed directly in series with the heaters or were tapped across a portion of the voltage dropping resistor. Under these conditions the lamp received a serious overload during the starting cycle or if protected from this surge had an operating voltage too low for satisfactory illumination. Within the past few years this situation has been remedied to some extent by the use of ballast tubes having a resistance-temperature characteristic to protect the dial lamp. The most recent development in method of dial light connection in A.C.-D.C. receivers is the type 35Z5 tube which has a tap on the heater across which the dial lamp is connected. The circuit is so arranged that the pilot lamp is also in the plate current circuit and part of its current therefore is derived from the B supply system. Since the plate current does not reach its final value until the starting surge has been completed, it is possible to protect the lamp from over-voltage during starting and still provide sufficient illumination in the final steady state condition.

Failure of Rectifiers and Condensers During Starting Transient Conditions

The elusive nature of rectifier tubes and condenser failures in A.C.-D.C. sets has been due almost entirely to the set of conditions which can occur during the first few cycles after the receiver is turned "on." Some years ago one of the larger tube companies in an attempt to determine a rational explanation for tube and condenser failures in a certain receiver, conducted a number of tests in which the set was turned on manually, allowed to operate until final temperatures were reached and then turned off. This cycle was repeated until a failure occurred. It was found that the failures occurred once in every 720 operations on the average and that upon mathematical analysis this figure corresponded to the random chance of turning on an A.C. circuit at the positive peak.

Another company in investigating the reason for frequent tube and condenser failures in one of their larger A.C.-D.C. sets found that an unusual set of field conditions was responsible. This particular receiver employed excellent filtering and therefore had an exceptionally low hum level. In demonstrating this the dealer would turn down the volume control to allow the prospective customer to listen to the hum. If the control were inadvertently turned too far and the receiver turned off, the B supply system would be drained of its charge but the cathode type tubes would still be hot when the receiver was turned on again. Under these conditions the rectifier tube was forced to supply an instantaneous peak current greatly in excess of any normal operating condition since the input condenser had been drained of its charge. It was found that the transient current under these conditions was sufficiently high to fuse the cathode tab in the rectifier tube. This tab will normally carry a current as high as two amperes without fusing.

With conditions of this nature occurring in the field it is natural that tube and capacitor manufacturers would individually place the blame upon the other party especially in view of the lack of any accurate data. Tube companies were hesitant or unwilling to allow the use of extremely high filter condenser values since the peak current and transient charging current through the rectifier tube was correspondingly high. On the other hand the condenser manufacturer was equally insistent that the capacitor value be sufficiently high to guarantee reasonable life expectancy under the high RMS ripple current conditions.

A satisfactory remedy has been found in the use of a series resistor in the supply system. This resistor will limit the instantaneous initial current which the rectifier may be called upon to supply and if the steady-state peak current does not exceed the value which the tube companies have found to be satisfactory there is little reason to anticipate a greater proportion of tube failures in the transformerless type of set than in those employing a power transformer.

It is suggested that service men who have encountered frequent rectifier tube failures in existing sets install a resistor of approximately 50 ohms in series with each plate of the rectifier tube. The loss of plate voltage occasioned by the introduction of this resistor should not be serious enough to be noticeable and can usually be more than compensated by the substitution of a higher value of input filter condenser, especially if the capacitor must be replaced during the service repair.

Shock and Fire Hazard

The transformerless type of circuits discussed in this chapter all employ some type of direct or conductive connection between the chassis and the power line. In most circuits one side of the power line is either directly connected to the chassis or is connected through a fairly large capacitance. The standard practice in most communities in the United States requires that one side of the house wiring circuits be connected to ground at the electric power meter. It is readily seen that if the receiver plug is so inserted in the outlet that the chassis is connected to the ungrounded side, the full power line voltage can occur between the chassis and any other actual ground such as a water pipe, radiator system, or grounded conduit or outlet face plate. This is the reason for the insistence on the part of both the Fire Underwriters Laboratory of the United States and the Hydro-Electric Power Commission of Ontario, that in these cases no exposed metal part of the chassis be accessible for accidental contact by the user. Such condensers as may be necessary to provide adequate radio frequency grounding or by-pass of the power line must be low in value to limit the 60-cycle current which might flow as a shock current.

Another wise precaution of these regulatory commissions is that every component which has any direct connection with the power line must be enclosed completely in metal so as not to present a fire hazard in the event of accidental short circuit or breakdown of any of the parts which would occasion a power arc.

• *Section* 4

THE MYE TECHNICAL MANUAL

Vibrators and Vibrator Power Supplies

P.R. MALLORY & CO. Inc.
MALLORY

VIBRATORS AND VIBRATOR POWER SUPPLIES

General Theory of Vibrators

The operation of radio receivers and transmitters, public address systems, inter-call systems, electronic apparatus, and many other similar devices and apparatus, requires the use of direct current electricity for at least part of their proper functioning. This direct current is usually at comparatively high voltages for plate and screen-grid potentials, and at low voltage for negative potential on the control-grid, although it may also be used for relay operation, etc., in associated apparatus.

Where the apparatus or devices are to be used in certain restricted localities, principally in the central business districts of larger cities, where 110 or 220 volts of DC is supplied on building wiring, satisfactory operation may often be secured with this amount of potential with the special tubes and components that have been designed for this service. There may be cases, however, where this comparatively low value of DC potential is not sufficient to furnish the desired performance from the device, and therefore the power-supply is not satisfactory.

Probably the greatest number of all electronic devices and similar apparatus are used in districts where alternating current (AC) is supplied in buildings or homes, usually at potentials of 115 or 230 volts. Under these circumstances, the DC high voltage can be secured easily by means of a step-up transformer, a suitable rectifier tube, an appropriate filter consisting usually of an iron-core choke by-passed on either side by a high-capacity condenser, which in most cases is an electrolytic type, and a suitable voltage-divider. See Illustration No. 1-a. Where a low-voltage source of direct current is desired, a step-down transformer is used, a compact dry-disc rectifier or rectifier tube, and another suitable filter following to remove the pulsations from the output. In all of these cases, no particularly difficult procedure is required, nor are any unusual qualifications or limitations to be met in designing the power-supply to furnish the desired output. Technical hand-books have provided excellent design data for transformer designs, and filter component selections, and tube handbooks furnish accurate rectifier characteristics as well as approximate data for computing load requirements. Recent publications and pamphlets have furnished information on design data required in designing dry-disc rectifier—low-voltage power-supplies.

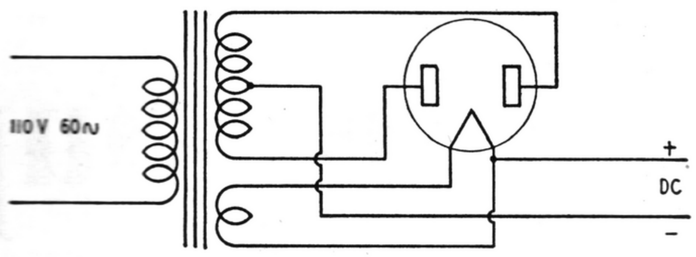

Fig. 1-a

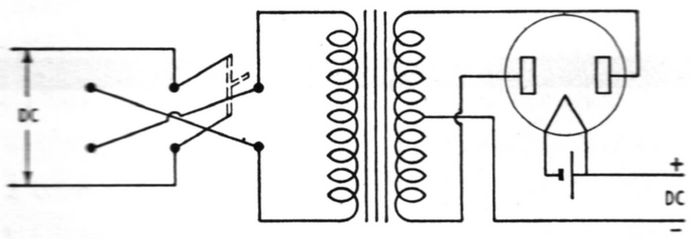

Fig. 1-b

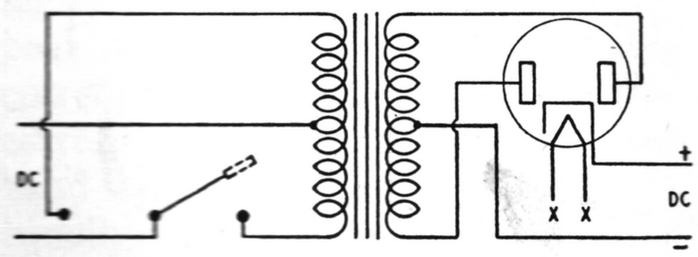

Fig. 1-c

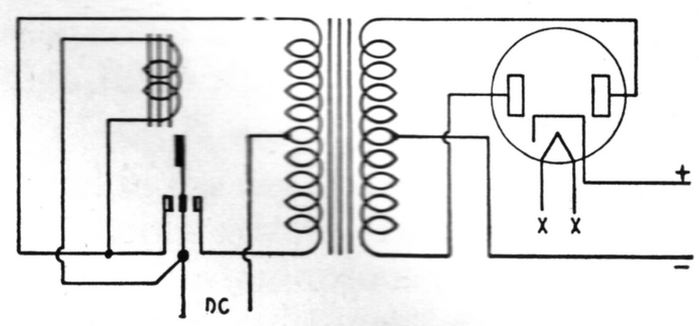

Fig. 1-d

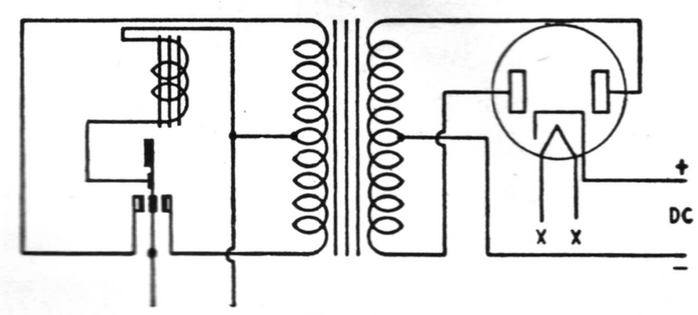

Fig. 1-e

There is one field of application, however, where neither high-voltage DC nor AC is available for supplying the required high-voltage DC for the apparatus, but where it is possible to employ a comparatively low-voltage battery to furnish power. This may be a 6-volt storage battery as in the case of an automobile or farm; a 12-volt storage battery as in the case of aircraft, busses and trucks; a 24-volt storage battery as in aircraft or boats; a 32-volt storage battery as on farms; or a 110- or 220-volt system as in cities. Or, it may be primary-cell batteries, as used on railway signal systems or telegraph apparatus; or dry-cell batteries as used on portable radio receivers, sound apparatus, hearing-aids, etc. Because these low-voltage sources would not supply the proper potentials for satisfactory operation, the original designs relied on dry-cell "B" batteries of sufficiently high voltage to operate the apparatus. Later motor-generator systems, known also as genemotors, dynamotors, and magmotors, in which the same armature serves as motor and generator, were used as replacements for the "B" battery supplies. This was a logical step, inasmuch as motor-generator design and knowledge was accepted fact and widely different processes were not required in adapting the machinery to the new application.

Introduction of the Vibrator

At about the same time that the motor-generator type of supply was being introduced, the P. R. Mallory & Co.

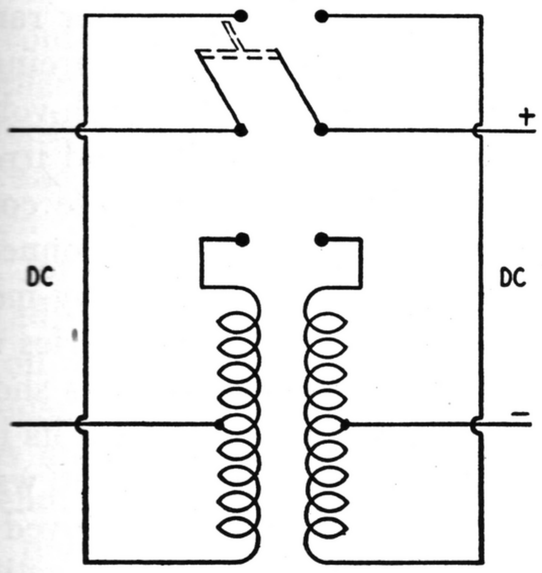

FIG. 1-f

organization began the introduction of a new device known now as a Vibrator, but which was first introduced under the trade-name of Elkonode, to furnish the required AC so that a transformer could increase the voltage, which in turn could be rectified and filtered for high-voltage DC. This has been the innovation in the electronics field which has popularized the automobile radio, the farm radio, and other apparatus operating from low-voltage DC power sources, to the point where construction and sale of this equipment is an important percentage in the total volume in the field. It is with regard to the design and construction of power supplies using vibrators that this text is being written.

By referring to Illustrations 1-b, c, d, and e, we can see how a mechanical vibrating system can be coupled with an electrical circuit to perform the functions of the Alternating Current source and thus secure the equivalent final result as is secured in No. 1-a. In No. 1-b we find that by placing a reversing switch in the supply lines of "a," we can connect the power-supply to a DC source and generate an AC voltage across the transformer primary, thus inducing a higher AC voltage in the secondary as in "a." No. 1-c illustrates a different, and the generally accepted manner of securing the AC voltage upon the primary of the transformer, wherein a center-tapped primary winding replaces the original one and a less-complicated switch can be used. Illustrations No. 1-d and 1-e show the switch replaced by an electrically driven vibrator, the one shown in "d" being the more common "shunt-coil" type while the other one shown in "e" is the "separate-driver" type.

By carrying the analogy slightly further, we can evolve the principle of the self-rectifying, (also known as the synchronous), vibrator. Illustrations Nos. 1-f and 1-g show that the tube rectifier of "c" has been replaced by an additional blade and contacts for the switch. This switch synchronously connects the proper half of the transformer secondary to the output and the proper half of the primary to the input to secure the desired polarization of the output DC voltage. Illustration "f" would compare to a "split-reed" type of vibrator, whereas "g" shows a common-, or solid-reed, type, which will be thoroughly described and discussed later.

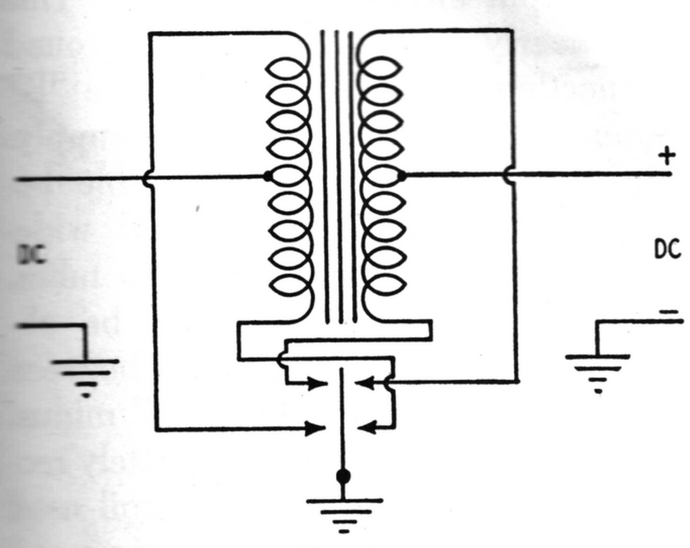

FIG. 1-g

The following reproductions picture the Mallory single-reed Elkonode in two positions:

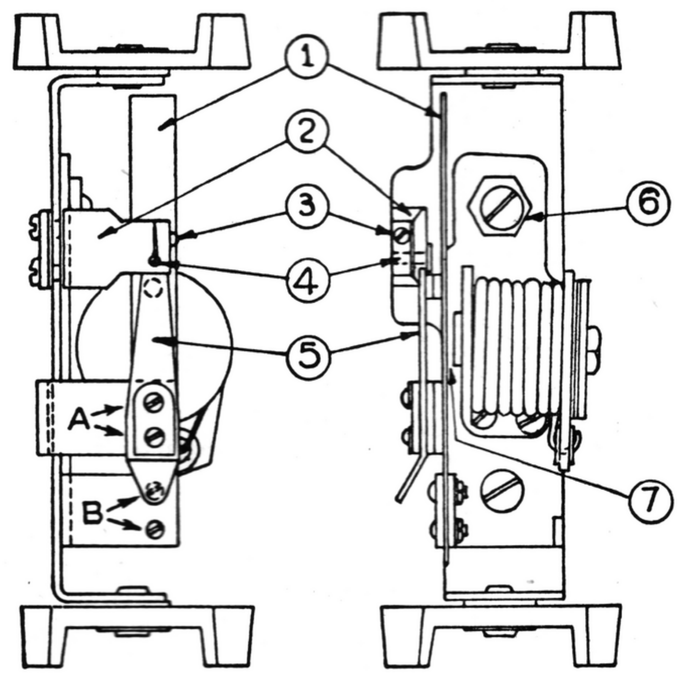

FIG. 2

1. Reed Assembly
2. Stop-post mntg. block
3. Stop-post locking-screw
4. Stop-post
5. Contact Spring Assm.
6. Cam-nut adjustment
7. Air-gap

History and Design of Past and Present Vibrators

Since we are discussing the design and construction problems arising from the use of vibrators, it is advisable that a short history and a description of the past designs of vibrators and circuits be presented.

"Half Wave" Interrupter

The original vibrator, designed for radio receiver operation, both as a component part and as part of a battery eliminator, was a so-called "half-wave" interrupter. A line drawing of this mechanism is shown in illustration 2, together with the circuit in which it was used. The basic design included a single tuned reed carrying a contact rigidly fastened to the reed, a semi-stationary flexible spring carrying a second contact, adjustable supporting assemblies, and a magnetic coil of low resistance depending upon the load current for its energization, (in other words, a series coil type of unit). Of necessity the contacts were closed at rest and had to make good electrical contact before the unit would start, and the load current had to be approximately correct before the reed would reach correct amplitude and good operation be secured. The rectifier tube used with this vibrator in the power-supply was a cold-cathode gaseous type, also half-wave.

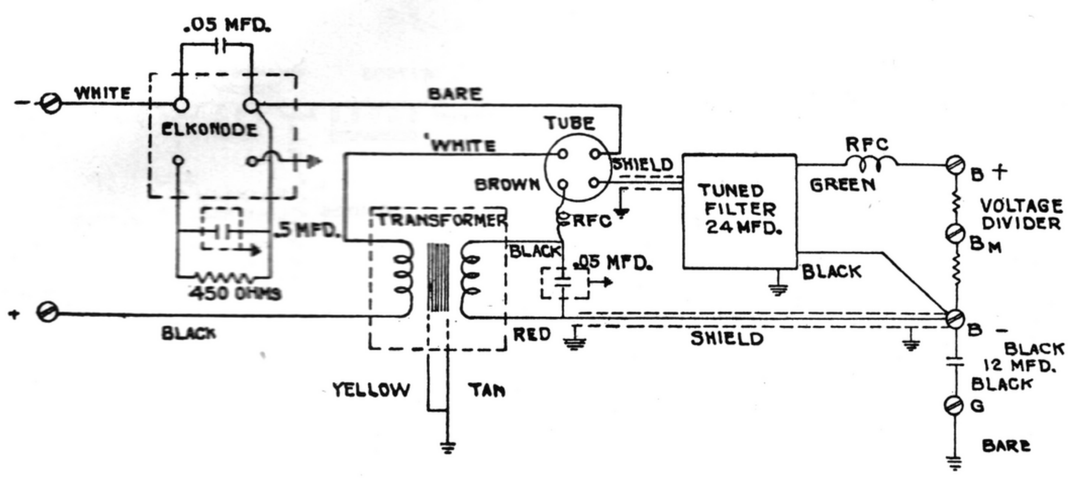

FIG. 2

Dual Reed Vibrator

The next step in the development of vibrators was the addition of a second vibrating reed and associated spring and contacts. This "dual-reed" vibrator is illustrated by the line drawing in illustration No. 3, together with the circuit in which it was used. The coil position was changed, so that the armatures now included on the reed assemblies could swing past the end of the core, instead of being attracted to it as was the case with the original vibrator. All of the reeds and springs were insulated from the base and from each other, permitting independent circuits. The two reeds on any vibrator had to be exactly matched in vibrating frequency. Each production reed was matched to a standard on a master oscillator by removing a small portion of the armature weight. The coil was still a series type, depending upon the load current for good amplitude, the contacts of both pairs were closed at rest, and the second set of contacts were used for mechanically rectifying the high-voltage AC instead of using a rectifier tube. As can be seen in the circuit, Fig. 3, a "phantom-load" resistance was required when the vibrator ran on "no load" to prevent contact arcing on the rectifier and possible high-voltage break-down because of low and irregular reed amplitude under those conditions. This phantom-load was connected or removed from the circuit by means of a relay whose coil was in series with the high-voltage load circuit as shown. While this type of vibrator had its limitations and field difficulties, it was a decided step forward and proved the practicability of synchronous rectification.

The following reproductions picture the Mallory dual-reed or self-rectifying Elkonode in two positions: a side view showing the Elkonode with cover and rubber cushion removed, and a front view with cover and cushion removed. Numbered arrows clearly indicate position of Elkonode parts involved in installing new contact spring and new reed assemblies.

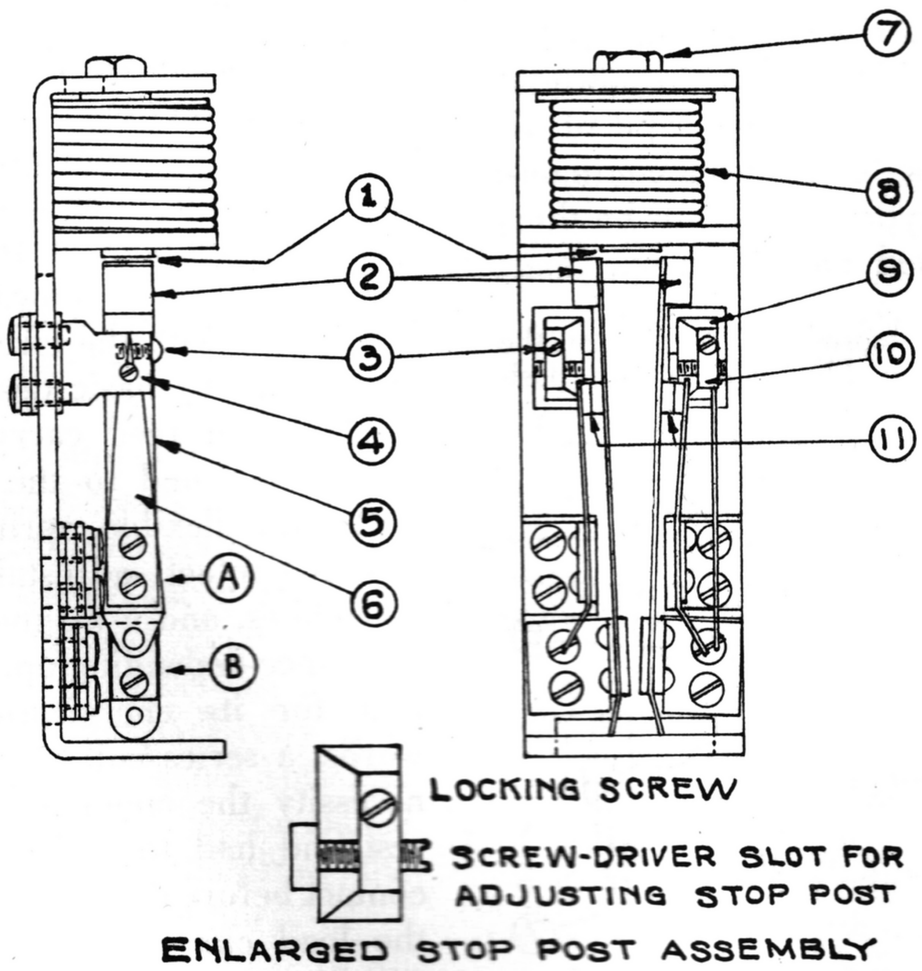

1. Air-gap
2. Reed counter weights
3. Stop-post locking-screw
4. Stop-post
5. Reed Spring Assm.
6. Contact Spring Assm.
7. Coil mounting nut
8. Coil
9. Stop-post mounting block
10. Position contact spring behind stop-post head
11. Contact points

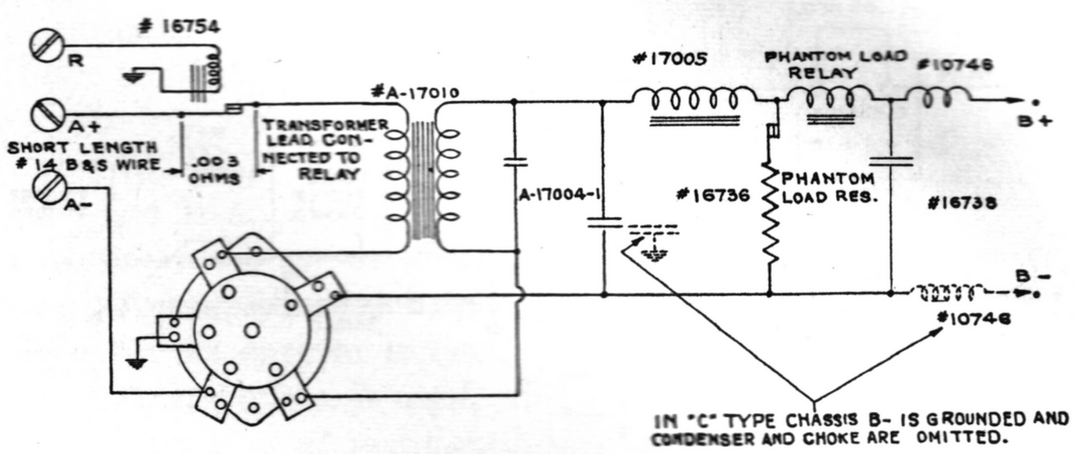

FIG. 3

"Full Wave" Synchronous-Rectifying Vibrator

Considerable progress was made when the "full-wave" vibrator was developed. Contrary to what might have been expected, the first unit developed was the full-wave synchronous-rectifying (known also as self-rectifying) vibrator instead of the full-wave interrupter vibrator. This unit is shown in line-drawing in Illustration No. 4, together with the circuit in which was used. The construction consisted of a "U" frame so designed to permit the mounting of a coil with pole-piece at the closed end, and the vibrating reed and insulated side-springs at the opposite open end, the latter being clamped under high mechanical pressure while the holding screws were tightened. The free ends of the side springs were arranged in relation to screws mounted in the side of the frame so as to be adjustable by screw action, and locked in place. The reed carried contacts mounted on either side in pairs to coincide with the stationary arm contacts, but in contrast with the "dual reed" vibrator previously described, the dual reeds were replaced with a single reed, thus electrically connecting the input and output circuits at one point. This was nearly always made the ground connection of the battery and the "B" minus connection of the power-supply. Such connection was permissible because of the introduction and widespread use of heater-type radio tubes, whereby negative bias could be obtained by self-biasing resistors between the cathode and ground or "B" minus. Another difference not immediately recognized is the type of driver-coil used on this newer design. This driver-coil

is a comparatively high-resistance winding placed in parallel with one-half of the center-tapped primary of the transformer (and the battery), so that it is no longer dependent upon the load current for starting, or proper amplitude and adjustment and therefore can operate on any load between no-load and full-load satisfactorily. The contact pairs are all open at rest and starting depends upon the magnetic pull of the coil moving the reed armature, and therefore the reed contacts, far enough to make good electrical connection with the side-spring contact connected to the same side of the transformer to which the coil is connected. This shorts out the coil, collapsing the magnetic field and therefore releasing the reed, permitting it to return to, and beyond, its original position. At this time the coil is again connected and another pull impulse is given to the reed. At the time of introduction of this type of vibrator, it was customary, and thought necessary, to include internally mounted and connected point condensers across the rectifier contact pair to suppress sparking and contact flaring. Little was known about selecting the value for these condensers, and they were usually determined by a "cut-and-try" method of investigation on life-tests and by visually inspecting for the reduction of visible sparking. As will be seen later, this accomplished to a fair degree the scientific selection of timing capacities now used in determining "buffer" condenser capacities today. No tuning of the reed was required for this type of vibrator, but commercial tolerances used in manufacture resulted in a rather close variation in frequency. This frequency was approximately 135 cycles per second, in contrast with a frequency of approximately 85 cycles per second for the two preceding units.

The following reproduction pictures the Mallory type 80 Elkonode in both top and side views with covers and with point buffer condensers removed:

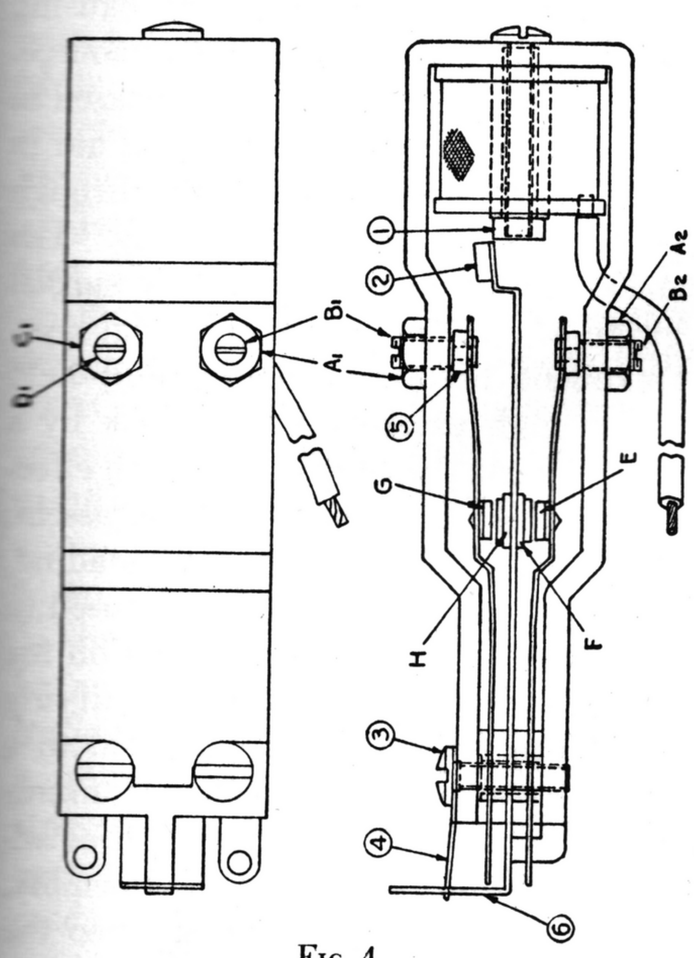

FIG. 4

EXPLANATION OF ABOVE CHARTS

A—A2 —Rectifier Lock Nut
B1—B2 —Rectifier Adjusting Screw
C1—C2 —Interrupter Lock Nut
D1—D2 —Interrupter Adjusting Screw
E, F, G, H—Rectifier Contacts
E, F, G, H—Duplicate for Interrupter Side

1. Magnet Coil Pole Shoe
2. Reed Armature
3. Stack Clamping Screw
4. Connector Plate
5. Insulating Bushing
6. Reed Tail

"Full Wave" Interrupter Vibrator

The next unit developed was the full-wave interrupter vibrator, in order to furnish a unit to be used with the newly developed cathode-type, indirectly-heated rectifier tube. This construction is illustrated by line drawing in Illustration No. 5, together with circuit in which it was used. As can be seen, the same frame, coil, and reed assembly type of construction was used as was used on the preceding vibrator, with the double sets of side-springs being replaced with a single set, etc. At this time the use of a single "buffer" timing capacity was adopted, connected across the entire secondary of the transformer in order to reduce its size, although the voltage rating had to be increased. Some manufacturers still used two condensers, with the center-tap connected to ground, and this practice is used occasionally today, principally as a method of improving "hash" (interference) suppression. Mallory pioneered in the introduction and perfection of an oil-filled vibrator condenser, both for the internally mounted point condensers and for the "buffer" type, with the result that condenser failures were greatly reduced, or eliminated. During all of this development period, output loads had been increasing, and physical size had been decreasing. This was made possible by increase in operating efficiency, better knowledge of contact material performance, and improved mechanical design. In spite of requirements for still higher outputs, the trade demand was for still smaller vibrators with longer life characteristics, quieter mechanical performance, and greater uniformity with lower price.

1. Magnet coil pole shoe
2. Reed armature
3. Stack clamping screw
4. Connector plate
5. Insulating bushing
6. Reed foil

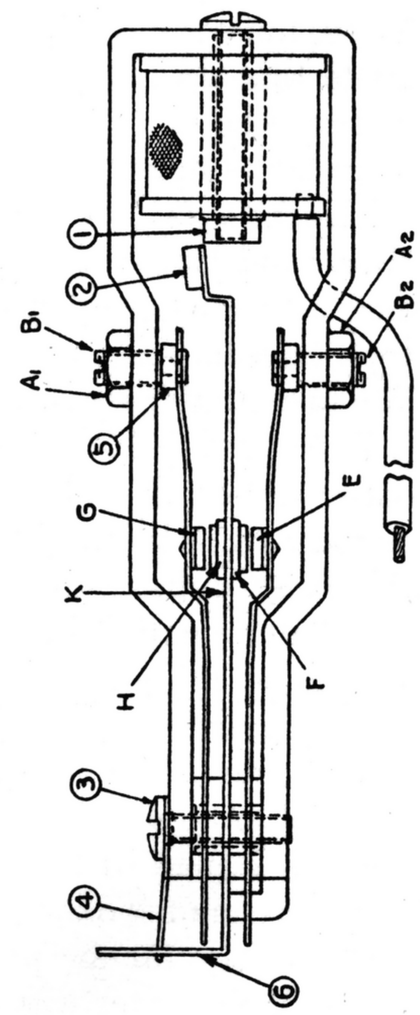

A—Lock-nut
B—Adjusting screw
E, F, G, H—Contact points

FIG. 5

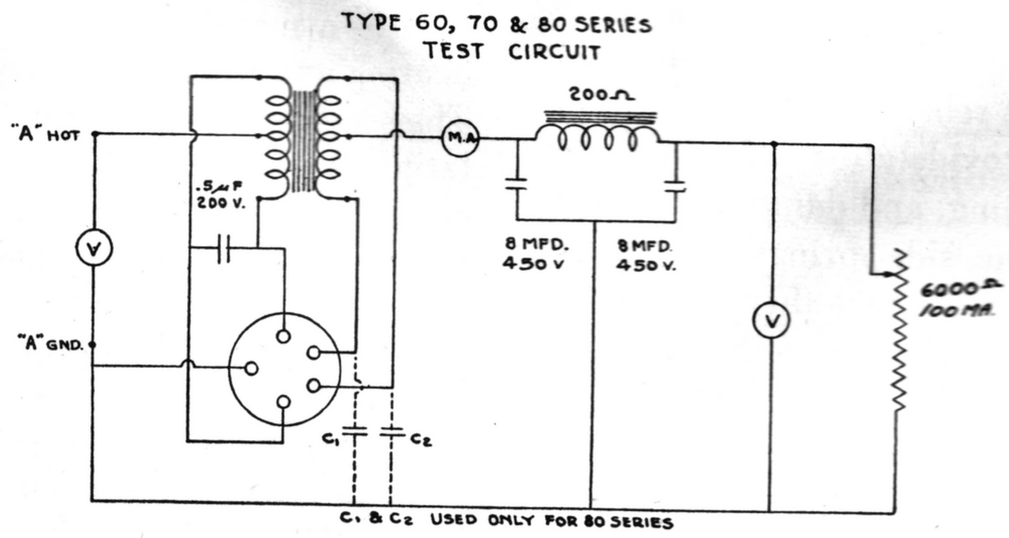

FIG. 4

The Eight-Contact Vibrator

The answer to this demand was the development of a new type of vibrator, with considerably smaller size, higher

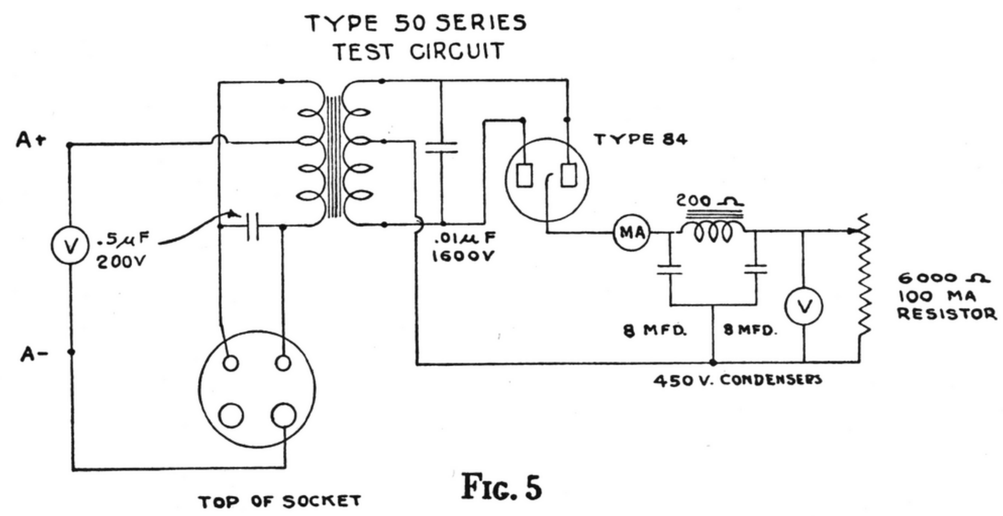

FIG. 5

contact pressures and better contacting action, more efficient driving power, and radically improved mounting system. This unit is shown in Illustration No. 6, the operating circuit being similar to that shown in the last preceding design. The first vibrators were in rectangular shaped containers of metal, 2 11/16″ x 2⅞″ x 5 ⅝″, with plug-in base, and sound-deadening liners of special sponge-rubber. The dual-reed type effected only a small reduction in size to a similar rectangular box 2¼″ x 2 7/16″ x 5 5/16″, while the first full-wave units allowed a reduction to a round can 2″ in diameter by 4½″ long. All these units used the plug-in base. This later small design (Illustration 6) permitted the size to be reduced to a 1½″ diameter can by 3 3/16″ long, yet the permissible output power was increased to 30 watts (assuming the most efficient design of transformer and circuit), as against 6.3, 9.0, and 18.5 watts respectively, for the preceding units.

The interrupter was made with eight contacts, (four pairs), in the same manner as the self-rectifying unit, with the pairs on the same side of the reed connected in parallel by means of jumpers in the stack assembly. These jumpers were omitted when making the self-rectifying type. For the interrupter unit the contact spacing for all pairs was approximately the same, while for the self-rectifying unit the interrupter spacings were the same as before but the rectifier spacings were somewhat wider. (This was the same, of course, for the previous self-rectifying design, a feature upon which a U. S. patent has been granted to the Mallory organization.) This type of adjustment for the self-rectifying unit permits the unit to start satisfactorily by having the coil shorted by the interrupter contacts, and also permits the load to be connected and disconnected in the high-voltage low-current circuit instead of the low-voltage high-current circuit, thus prolonging the life of the contacts. This same type of adjustment also gives rise to a differently shaped voltage wave form, as observed on an oscillograph.

1. Stranded leads and soft rubber tubing
2. Spring washer-plate
3. Stack clamping screws
4. Stops and solder lugs
5. Reed slot for starting
6. Reed contact arms
7. Outer contact arms
8. Reed and armature
9. Pole-piece integral with frame
10. Coil

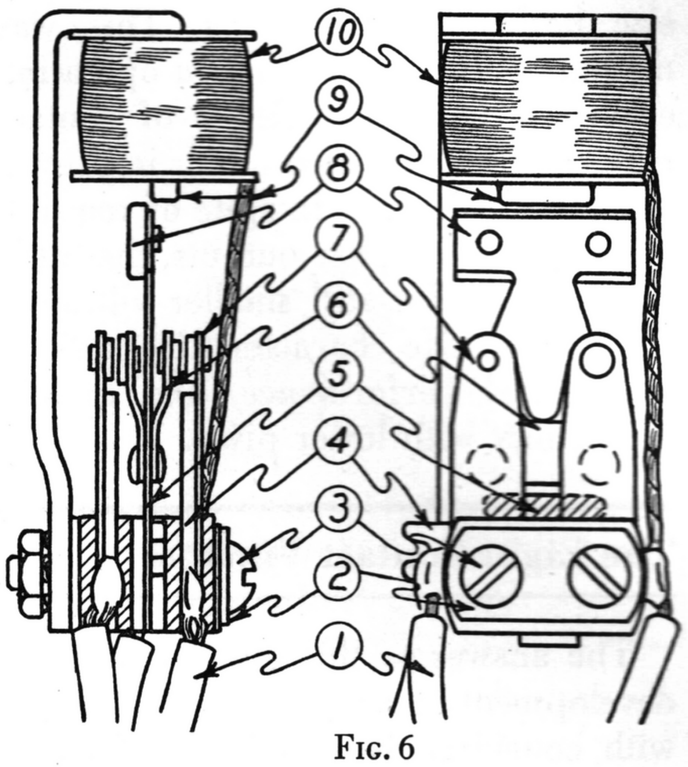

FIG. 6

It will be noted that an open type of frame has been used on this latest design instead of the "U" frame previously employed. This permits greater visibility, easier handling of parts in assembly, etc. The adjustment of spacings is now accomplished by bending of soft-iron "stops," upon which the side-springs rest with preformed pressure, instead of by screws. The stops also provide a method of securing definite positioning of the side-springs. Since the stops are not of spring steel, they will not relax from a set position. They also provide a quick break to the contact opening, and dampen the oscillations of the side-springs during the part of the cycle that they are not in contact, thus eliminating bounce and chatter upon remaking contact. The reed now uses off-set arms to carry the contacts, thus in effect furnishing a longer reed in the short length of frame by moving the hinge portion back toward the stack. The reed also is provided with a slot near the stack which provides a very flexible reed during the short length of movement between opposite sets of contacts, and permits low-voltage starting without affecting high-voltage running.

The mounting consists of a specially designed sponge-rubber liner-cap, which grips the stack-end of the vibrator and supports it freely above the plug-base, allowing mechanical freedom for vibratory movement without transmission of same to the external mounting. A liner for the can deadens direct noise radiation through the can, and an extruded zinc can, with tapered cross-section in the end, prevents natural resonance of the can from causing ringing, or "singing" from this source. Special flexible copper leads encased in soft, sulphur-free, rubber tubing aid in noise and shake reduction, through proper placement and routing. The stack insulation used is a very special grade of bakelite, given a special heat-treatment before assembly, and held under high pressure in the stack by a special spring washer-plate which effectively prevents loosening of the assembly even under severe overloading. Comparatively thick bakelite is used to provide sufficient voltage insulation for the unit when used as a self-rectifying type. The stack parts are ground to a thickness tolerance of plus or minus .0002″ in order that a minimum of adjusting will be required after assembly. The use of parallel contacts, when the unit is used as an interrupter, increases the heat conduction from the contacts and also furnishes longer life by providing a greater amount of tungsten surface for erosion, without the use of massive contacts. While only one of the two contact pairs will carry current on any one half-cycle, the action will alternate in a manner that will average the heating and wear over a period of time. The self-rectifying unit, by commutating the load current in the rectifier circuit, reduces the heating on the interrupters, and thus this unit may also carry the required current to permit an output of 30 watts. Both of these designs have been very successful and are being widely used at the present time. The frequency of both designs is 115 cycles per second.

"Tuned Reed" Vibrator

A new vibrator of radically new design, pictured in Fig. 7, has been developed in answer to the demand for a four contact unit capable of extremely efficient operation under medium output loads. This vibrator is classified as a "tuned-reed" type, inasmuch as the principle upon which it depends for its correct operation and which results in its exceptionally long life is a mechanically tuned relationship between the flexible, oscillating reed-arms and the oscillating reed itself. The arms upon which the reed contacts are mounted are selected, and matched with selected contacts, so that the resultant mechanically oscillating members have a frequency five times that of the reed, which is itself selected and matched with armature weights to give the desired result. See Illustration No. 7. The fundamental frequency averages around 115 cycles per second in this design. The outer side-arms in this design are stiff and move very little when in operation, and adjustments in spacing that are necessary after the grinding of stack parts to close tolerances are made by bending of these comparatively soft steel arms.

The reed used in this latest design has a tapered construction, see Illustration No. 7, permitting excellent reed amplitude without exaggerated fiber stresses in the reed material at localized points such as occur in rectangular reeds with internal holes punched to provide the required graduated flexibility. At the same time this construction largely prevents "whipping" of the reed, since now there are not two sections to oscillate individually. The slot near the stack has been retained to provide good low-voltage starting, as in the previous design, and in addition another Mallory invention has been incorporated in this design in the form of a magnetic shunt on the reed driving circuit. This shunt permits the full force of the magnet coil to be exerted at low voltages, especially for starting purposes where it aids by localizing the flux path, yet reduces the force at higher battery voltages and therefore prevents excessive reed amplitude which might occur because of the resonance of the mechanical system.

Because of the tuned principle, the contacts close with practically no velocity difference (thus eliminating bounce and chatter), they open with very high velocity (thus furnishing a quick break and a very short duration of any arc that might be drawn), and they have practically no wiping action while in contact (eliminating contact erosion, which is the cause of contact spacings increasing with life). These factors provide excellent uniformity of production vibrators, trouble-free life, excellent output over the entire life of the unit, and reduction of "hash" interference generation to a minimum, all when used with properly matched circuit components, including the transformer and timing capacity. This unit is made in the same size as the eight-contact units previously described, and can give excellent life when used on outputs up to 20 watts at average efficiencies. The outputs mentioned have been in relation to an input voltage at the vibrator and transformer of 6.3 volts, which has been standardized as the value to use in computing load requirements for 6-volt batteries when operated upon a charging circuit.

1. Stranded leads and soft rubber tubing
2. Spring washer-plate
3. Stack clamping screws
4. Stops and solder lugs
5. Reed slot for starting
6. Reed contact arms
7. Outer contact arms
8. Reed and armature
9. Pole-piece integral with frame
10. Coil

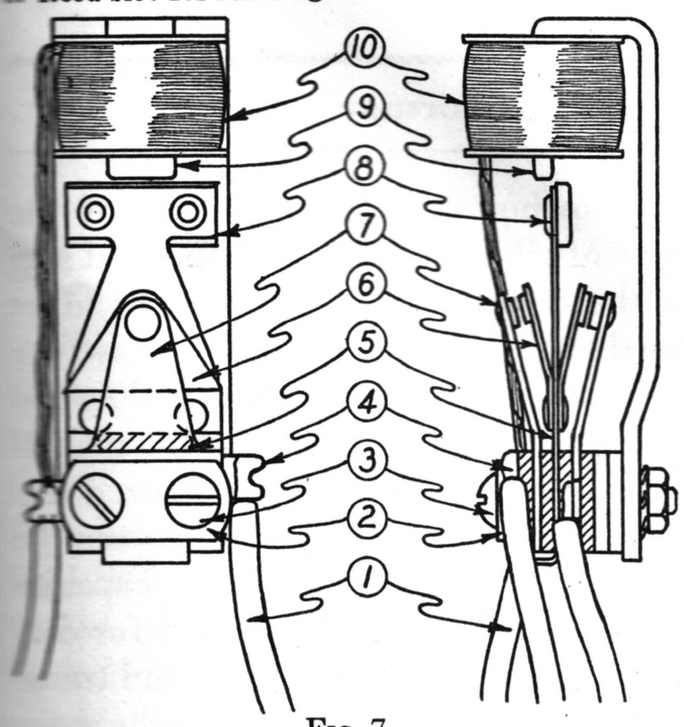

FIG. 7

"Split Reed" Vibrator

A few words with relation to the so-called "split-reed" type of vibrator would seem advisable. While the Mallory Company pioneered in the introduction of this type of unit, and sold a considerable number, and later developed an excellent unit of small size, tooling costs and production difficulties, however, did not warrant producing this unit after a survey of the prospective uses indicated that the solid-reed version could be and had been adapted to practically the entire field. In the split-reed type of vibrator the interrupter and rectifier circuits are insulated as in the "dual-reed" type described earlier, but the two reeds are mechanically tied together so as to supposedly operate in synchronism, and the shunt type of driver coil is used, with full-wave operation provided by four pairs of contacts. Outside of the reversing-switch application, the chief use of this type of unit has been as a self-rectifying vibrator for supplying both "B" and "C" voltages for filament types of receiving tubes, when operating from the same battery as the tubes. Circuit and tube developments have provided means for using the solid-reed type effectively in this class of service, removing the need for the split reed. Details on bias circuits used commercially with solid-reed synchronous vibrator power supply systems are given on pages 87 to 91.

Vibrator Application Considerations

The next logical step in the study of vibrators and vibrator power supplies is the design considerations governing the associated circuits and components. A vibrator is not a brute-force device—it must operate under correct conditions to achieve economy and long life, and to obtain quiet hum-free performance. A knowledge of power supply design considerations is of distinct value to the serviceman in aiding in the prompt diagnosis of faulty components, and in showing the procedure for correcting faults in equipment.

In the design of vibrator-operated power supplies, engineers are faced with a considerably larger number of factors and problems that must be taken into account than are encountered in the design of an equivalent A.C. power supply. No one component in the supply can be divorced from the rest, since its function and design depends upon the design and operation of the other components. Therefore, the Vibrator, Transformer, Timing Capacity (commonly called the "buffer condenser"),

Battery Voltage, "A" Lead Resistance, and the "A" Current of the Speaker Field and Heaters, all must be considered as a unit when the power supply is to be designed. Knowing the nominal battery voltage, i.e., 4, 6, 12, or 32 volts, the approximate lead, switch, fuse, and "A" choke resistances, the current drain of the tube heaters and speaker field, and the variation in battery voltage encountered in service because of charging and temperature, the problem resolves itself into correlating the three important items of the supply, namely the Vibrator, Transformer, and Timing Capacity.

In the design of A.C. power supplies the designer is considering mainly, Economy of Manufacture, Heating, Regulation, and Output. All of these factors must also be considered in the design of a vibrator-operated power supply, and in addition, size and primary current drain are of paramount importance. Size because of the fact that this type of supply is usually used for auto receivers and other applications where space is at a premium, and primary current drain because of the limitation of battery drain and also the more important factor of vibrator life which is largely determined by the loading applied to the contacts.

Since it is necessary to operate this type of power supply in a multitude of receiver designs having varying values of "A" lead resistance and "A" current, it is customary now to rate the power supply as furnishing the required output at an input voltage of 6.3 volts as measured from the center-tap of the transformer primary to the reed-terminal of the vibrator socket. When this is not done, it is necessary that the "center-tap" voltage be specified at which the required output is to be secured. Since it is also necessary to operate this power supply on a battery whose state of charge is variable, and whose rate of charge from an auto generator or "wind charger" varies from zero to thirty amperes or more, it is necessary to so design the power supply components that they will perform safely with applied voltages to the system varying between 5.75 and 9.0 volts at the battery in the case of a nominal 6-volt battery. Voltages at the center-tap will vary considerably depending upon whether a "starting" condition or a "running" condition is being considered; this voltage may range from 5.25 volts to 8.5 volts, or a 62% variation. This compares to the 24% maximum variation (105 to 130 volts) encountered in the design of A.C. power supplies. In addition, since heater-type tubes are now used for practically all applications involving vibrator-operated power supplies, a "no load" condition for the supply is present every time the receiver is turned on and this must be considered fully in the design since a vibrator is not only a mechanical device, but is limited by transient conditions arising from unusual operating circumstances.

Vibrator Characteristics

Complete knowledge of the vibrator operating characteristics is the first necessity in starting a design of a power supply's electrical characteristics. These vary somewhat between various manufacturers, especially in those units manufactured prior to 1937-38. Prior to this time, full-wave vibrators were manufactured with frequencies of 85, 90, 100, 115, 135, and 165 cycles per second. Mallory has pioneered in establishing a frequency of 115 cycles per second, adopting this now generally-used frequency in 1935. In addition to the item of frequency variations, considerable variation also occurs in the mechanical "time efficiency" of the vibrator. Time efficiency refers to the percentage of the total time of one cycle that the power contacts are held in contact, although it is usually more important to determine this for each half of the cycle in order to measure the balance between the two swings of the vibrator reed mechanism. Values of time efficiency in the past have varied from 70% to 90%, but at the present time are mainly held within the range of 85% to 90% average.

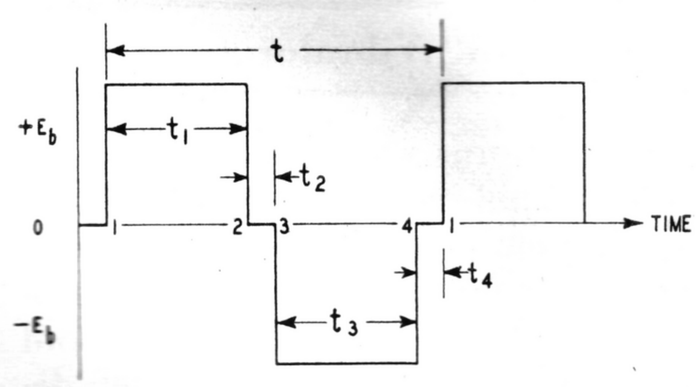

FIG. 8

Referring to Fig. 8, time efficiency of the vibrator is illustrated as an electromechanical waveform trace plotted against time in seconds. At 1 on the diagram the power contacts are closing on one direction of swing of the reed, connecting the primary of the transformer, in effect, to the positive terminal of the battery. The contacts remain closed until point 2, this length of time being t_1, where the reed has started its return swing and has opened this pair of power contacts. The reed now requires a length of time t_2 to continue this return swing to the point where the opposite pair of power contacts close at 3 on the diagram, connecting the primary of the transformer, in effect, to the negative terminal of the battery. These contacts remain together for the length of time t_3, when the reed has reversed its direction of motion again and has continued its return swing (in same direction as at 1) far enough to open the second set of power contacts at 4. The reed then requires a length of time t_4 to travel between the second set of power contacts at 4 and the original set at 1 where the cycle ends and a new one begins. Current can only flow from the battery while the power contacts are touching, or during the time periods t_1 and t_3. Since this power, in effect, is reversed on each half-cycle, alternating voltage is applied to the primary of the waveform shown. The RMS value of this voltage is, of course, dependent upon the percentage of time the contacts remain closed during each cycle, or in other words, upon the time efficiency. Time efficiency is, therefore,

$$\frac{t_1 + t_3}{t_0} = \frac{t_1 + t_3}{t_1 + t_2 + t_3 + t_4}$$

The Transformer

Knowing the characteristics of the type of vibrator to be used, the next step is the design of the transformer to be used with the vibrator to increase the primary alternating current voltage to a higher voltage of a sufficient magnitude such as to produce the desired rectified direct current. Since it can be shown that the value of timing capacity required in the primary circuit for correct matching of the vibrator and transformer depends directly upon the mag-

netizing current (maximum value) of the transformer required for the voltage of operation and upon the operating characteristics of the vibrator outlined in the preceding paragraph, it is of exceeding importance in the design of the transformer to consider first the range of flux density and also the maximum flux density to be encountered. This is because the magnetizing current-flux density relationship, commonly known as the magnetization or B-H curve, of the iron to be used in the transformer core is not a straight line, but is a curve which begins to deviate greatly from a straight line in most irons at a flux density of about 65,000 to 70,000 lines per square inch. Because it is necessary to operate the final design upon applied voltages covering a range of 6 to 9 volts, it would be desirable to limit the operating range of flux densities to the comparatively straight-line portion of the curve. However, this range is limited, and would be rather uneconomical except in the cases of some portable, or home receivers, where current drain is paramount. Therefore, it is usually satisfactory to set the upper limit (for maximum voltage) of 65,000 lines per square inch. Where the sacrifice of operating perfection and efficiency is required in order to secure economy, a maximum flux density of 75,000 lines per square inch is permissible. The following diagram, Figure 9, illustrates the approximate characteristics of a grade of iron often used for vibrator transformers.

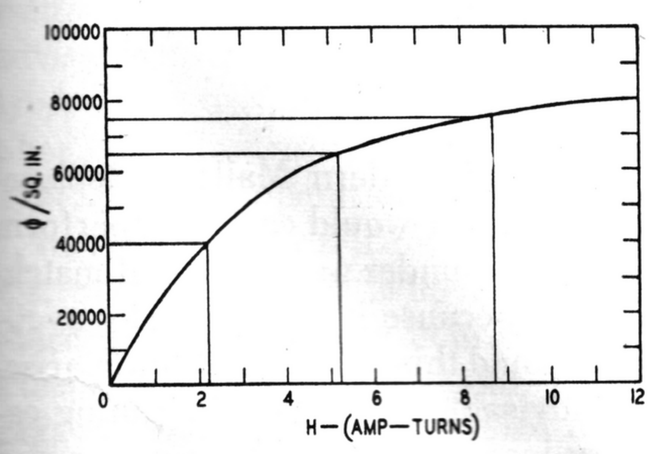

Fig. 9

This grade of iron is used, not only because of the low power lost as core losses, but because the variation between minimum and maximum limits of production runs of this grade are held to narrow limits. This enables a rather accurate determination in advance of the timing capacity necessary to give good vibrator performance. On those grades of iron with wide production limits, exceedingly variable results will be obtained in a production run of receivers using a supposedly identical transformer to the sample approved.

Knowing the limiting flux density, and the fixed vibrator constants, the design is now controlled by the balance between primary turns and the cross-section of iron in the center-leg of the shell-type of transformer usually used in this type of application. The biggest difference between the physical appearance of an A.C. transformer design and that of one for vibrator operation lies in the use of a dual primary on the vibrator transformer. As explained above, this is required to obtain the A.C. voltage effect. Also, on low battery voltages, such as 4, 6, and 12 volts, the wire size required for the primary is rather large, giving a rather inefficient winding space factor and almost always requiring that the primary be wound over the secondary. It is quite ordinary to find small power transformers for A.C. operation operating at a flux density of 90,000 to 100,000 lines per square inch as against the 65,000 to 75,000 lines per square inch for a vibrator transformer. Because of the need for the additional primary winding, the size of a vibrator transformer will always be considerably larger than for an A.C. transformer to furnish the same power output. The turns per volt are usually kept rather low for high output units, approximating 4 to 5. This is primarily done to reduce the leakage inductance of the transformer, although the combination of a medium size of lamination and large wire size works out best under this arrangement, the core being stacked thicker in order to adjust the flux density. Since the load currents must be increased or decreased through this leakage inductance, it acts as a burden on the contacts and therefore is more detrimental the higher this inductance is made. This leakage inductance burden has been demonstrated experimentally and in practice as being one of the biggest causes of rapid contact erosion, or wear. It is general practice to interleave the laminations 2X2, although 1X1 and 3X3 are often used. Interleaving 2X2 permits a lap joint between each lamination (as does 1X1 interleaving), whereas 3X3 or higher allows only a butt joint between all but the outside laminations in each group. Since the magnetic flux sprays from the core to a certain extent in all transformers, and this flux is modulated by any "hash" frequencies present in the electrical circuit, it is universally necessary to provide a comparatively heavy magnetic shield completely surrounding the transformer in order to provide a "hash"-free power supply. Of course, this is quite often enlarged to include the other components effectively.

Timing Capacity (Buffer Condenser)

With the transformer design arrived at, the magnetizing currents for the nominal and the maximum flux densities (corresponding to the nominal and maximum battery voltages), are calculated from the B-H curve and the length of magnetic path of the lamination used. These values of current are the average theoretical values used in determining the theoretical timing capacity required to give the proper voltage waveform for best vibrator operation. This is known as circuit matching. A timing capacity, or buffer condenser, is required in order to protect the circuit during the time that the reed is moving from one set of contacts to the other, in other words, t_2 and t_4 in Figure 8. If no capacity were used, when the contacts opened at 2 in this same figure not only would the battery voltage present on the contacts need to be "broken," but an exceedingly high voltage of the opposite polarity would be induced in the transformer because of the collapse of the sustaining magnetizing current (and therefore flux) which would also have to be "broken." This would cause severe arcing and failure of the vibrator unless some other component suffered voltage breakdown first. Also, when the contacts closed at 3 the full battery voltage would be applied directly across the contacts, causing a spark to jump the gap just before the contacts closed, which is also detrimental to good contact life. By connecting a condenser across either of the windings of the transformer, and adjusting the capacity to the predetermined value, the oscillographic waveform trace illustrated in Figure 8 can be changed to that shown in Figure 10 following.

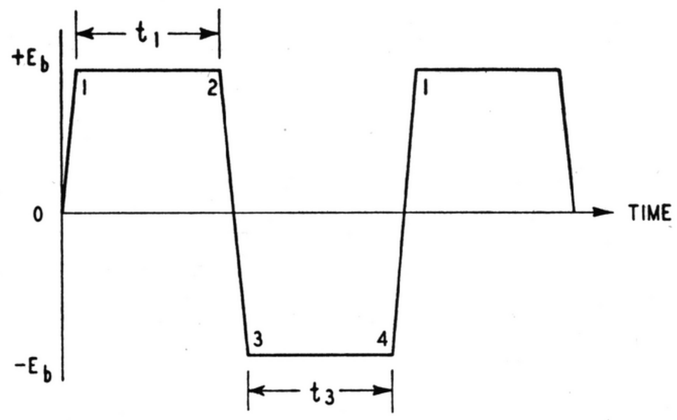

FIG. 10

We now notice that the "off contact" intervals of time, t_2 and t_4, are no longer horizontal lines but are sloping, closing the gaps between points 2 and 3 and points 4 and 1. This is the "ideal" waveform for an interrupter-type vibrator, or a self-rectifying type vibrator operating on no-load.

Selecting Proper Timing Capacity

The condenser has become a "tank" in which we store energy during the "on contact" intervals t_1 and t_3, and which discharges into the transformer winding during the "off contact" intervals t_2 and t_4 to supply energy to the transformer. This discharge is in the form of a damped oscillation in the circuit formed by the transformer winding inductance and the condenser; however, the first one-quarter cycle is never completed before the next pair of contacts close. The "ideal" waveform shown in Figure 10 can be secured experimentally, but is not practical in production, because of the variations in the several components used in the circuit. Also, as a vibrator's contacts erode, or wear away, the spacing between those contacts increases, increasing in turn the "off contact" time intervals t_2 and t_4 during which the reed must move from one set of contacts to the other. Because of this fact, a larger timing capacity is theoretically required with an old vibrator than with a new, and the additional

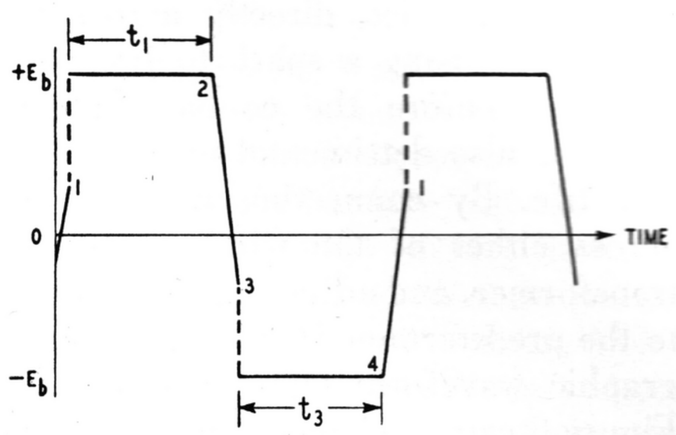

FIG. 11

capacity that is required to prevent "overclosure" of the voltage waveform must be included in the original design. Therefore, the desirable oscillographic waveform for an average condition for a new vibrator would appear as in Figure 11.

With the circuit adjusted as described above, the "closure" of the waveform shown in Figure 11 is between 60% and 70%. That is, the distance vertically between the points where the contacts open and close, 2 and 3, is about 60% of the total distance between the two horizontal lines t_1 and t_2, with the same conditions holding true for the points 4 and 1. This would also hold true, again, for the self-rectifying-type of vibrator operating on no-load. "No-Load" does *not* mean the removal of the first filter condenser, also.

The waveform picture of a properly adjusted self-rectifying vibrator operating under load is shown in Figure 12, following.

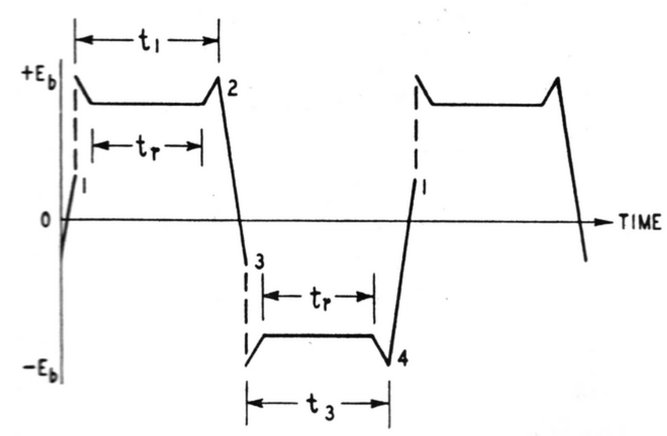

FIG. 12

The short, regular peaks shown at the start and finish of the time intervals t_1 and t_3 are proper and do not create "hash" or circuit difficulties if they appear approximately as shown. These peaks are caused by the increased voltage drop in all of the "A" circuit when the secondary, or "B" load is connected, since the vibrator is so adjusted that the interrupter contacts close before the rectifier contacts and open after the rectifier contacts. In other words, the rectifier contacts are spaced slightly wider than the interrupter contacts, the load thus being broken at high voltage and low current instead of at low voltage and high current.

Improper Timing Capacity

Correctly shaped waveforms have been pictured, but it is advisable to also illustrate a few of the more common mismatches found. It can readily be understood that should a modern 115-cycle vibrator with a time efficiency of 90% be used to replace an original equipment vibrator which originally was operating at 85 cycles and a time efficiency of 80%, a decided mismatch would occur. The new frequency being higher, the flux-density would be reduced by 26%, while because the new time efficiency is higher also, the flux density will in turn be increased by 13%. This is a net decrease of 13% in flux density, and correspondingly an even greater decrease in magnetizing current because of the curvature in the B-H curve of the iron. Because of the increase in time efficiency as well as in frequency, the "off contact" intervals t_2 and t_4 are considerably shorter (in seconds). Therefore, with less magnetizing current required by the transformer, and a shorter time interval in which to dissipate the stored energy, the timing capacity originally in the circuit is now too large, and the waveform pictured in Figure 13 results.

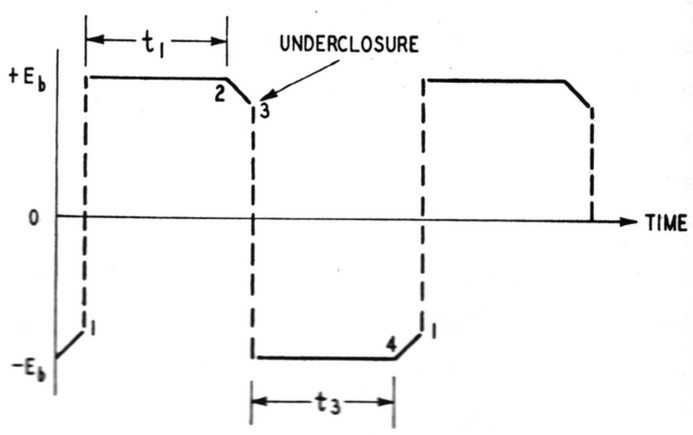

FIG. 13

Since the modern Mallory Replacement Vibrator would easily outperform the original under proper circuit matching, and because it is universally available, should this type of condition arise, it is advisable to replace the timing capacity incorporated in the receiver and install a Mallory Type OT condenser of a value which will approach the waveform shown in Figure 11.

Should a mismatch occur in which the reverse, or partial reverse, of the above be found, or a condition be found in which the original capacity chosen was too small, waveform pictures such as shown in Figures 14 and 15 will result.

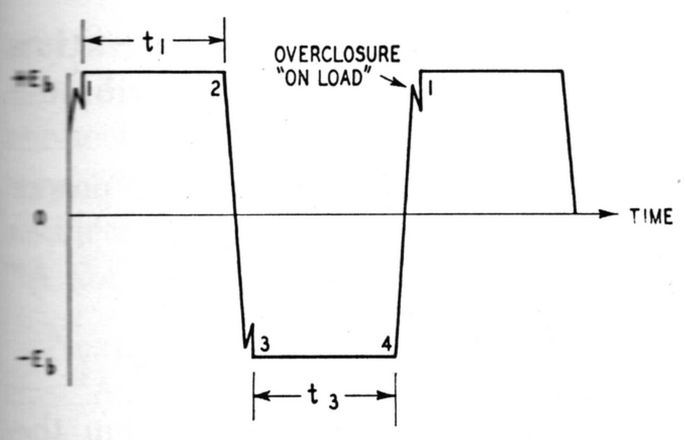

FIG. 14

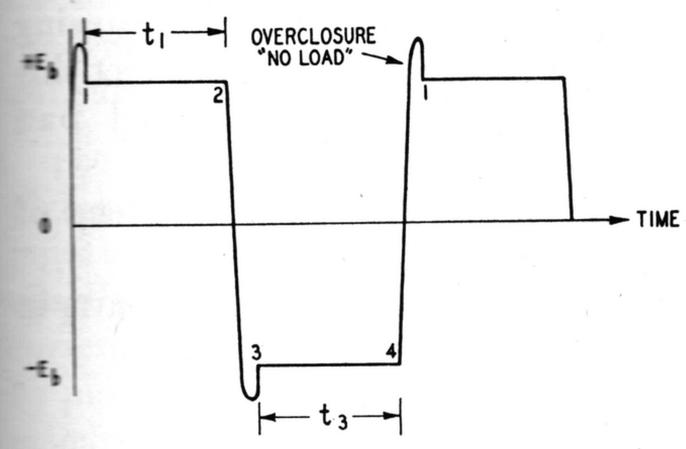

FIG. 15

Figure 14 illustrates a case of "overclosure" of the waveform with the load applied to the rectifier tube in an interrupter type power supply. This condition is not often noticed since it can be mistaken for bouncing of the contacts at the "make." However, if the load is removed, or the rectifier tube removed from its socket, the picture will change to that shown in Figure 15, if overclosure is present. Naturally the cure for this condition will be the addition of more capacity to the original, or better still, to replace the original with a new Mallory Type OT of the correct capacity. Condensers age in much the same manner as springs, and it is frequently advisable to replace such hard-worked types as are used in vibrator power supplies every few years at least, or every 1,000 hours of operation.

In the case of a self-rectifying vibrator, overclosure will evidence itself in much the same manner as in Figure 15, except that very sharp and usually ragged peaks will result instead of the comparatively round ones illustrated. These are exceedingly dangerous and will undoubtedly cause the vibrator or other components to "break down," since the transient voltages are usually much higher than the value observed upon the oscillograph screen, and are multiplied by the transformer turn ratio when applied to the secondary or rectifier circuit. It should be noted that all of the above oscillographic pictures are to be observed with the vertical plates of the oscillograph connected across the entire primary of the transformer. The picture given in Figure 8 cannot be secured with a transformer, but can be illustrated by the use of a center-tapped resistor of 10 ohms total replacing the primary of the transformer. In this case a separate-driver type of vibrator should have the nominal battery voltage applied, but a shunt type of vibrator should have double this value applied.

All of these oscillograph waveform checks should be made *not only* at the *nominal* battery voltage of operation, but also at the *maximum* voltage under which the receiver may be called upon to operate. Since many automobiles are now being sold equipped with charging voltage-regulators which maintain a voltage at the ammeter of approximately 7.8 to 8 volts, it is essential that a check be made with 4 cells of battery in order to reach the required level of voltage. The higher the voltage applied, the greater the tendency for the waveform to "overclose."

A condition such as "single-footing," the operation of the vibrator mainly on one contact set only, is quite prevalent with old and even with some comparatively new vibrators, and a waveform illustrating this condition is shown in Figure 16.

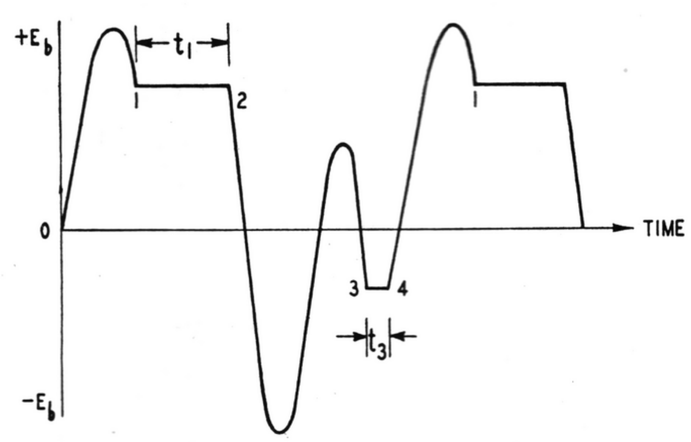

FIG. 16

Here is shown the condition where more than one cycle of the oscillatory discharge of the timing condenser has taken place before the one set of contacts closes at 3, whereas on the other set of contacts comparatively good operation is still secured although this will be found to have a short time interval t_1, since the reed amplitude will be low. This is usually overcome in slipshod engineering practice by use of additional timing capacity. However, this involves the acceptance of a waveform such as that in Figure 13, which is not desirable.

Effects of Bouncing Contacts

Bouncing or chatter of the vibrator contacts is illustrated in Figures 17 and 18, where 17 illustrates this condition

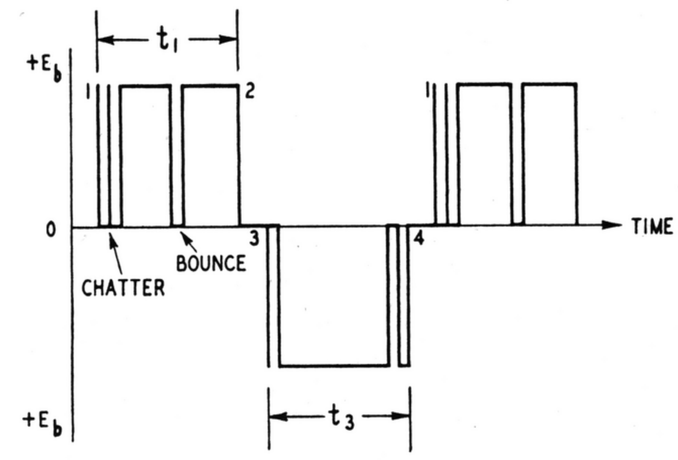

FIG. 17

when operating upon a center-tapped resistor, and 18 when operating upon a transformer-condenser set-up.

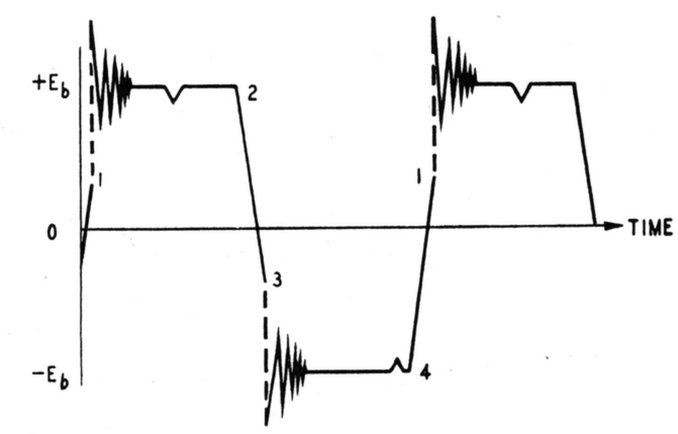

FIG. 18

Servicing Vibrator-Powered Receivers

Properly used in a well designed power pack, a vibrator is an extremely reliable device, and normally only one condition will ever arise which will shorten its life, or cause damage and premature failure. That condition is severe overload, and is usually the result of failure of some associated component such as the buffer condenser, filter condenser, etc. which will cause abnormally heavy flow of current through the vibrator contacts. The condition is apparent at once on the inspection of the vibrator mechanism, which will show burned contacts, bluing of vibrator reeds, and in severe cases charring of the rubber liner inside the container. Whenever a condition of overload is suspected, endeavor to locate and correct the trouble before trying a new vibrator. *It is especially recommended that the service method given on page 74 under the heading of "Important*

New Service Procedure" be followed if the cause of the receiver failure is not at once apparent.

Listed below are typical symptoms in vibrator-powered apparatus with suggestions as to causes.

No "B" Voltage

If the vibrator is operating and there is no "B" voltage, first disconnect the lead from the B+ output of the filter. If the voltage becomes much higher than normal when this lead is disconnected, the trouble is in the radio receiver proper.

If, after disconnecting the B+ lead, there is still no voltage, the trouble is in the power pack circuit.

The following list shows the *probable defects, in the order of their importance:*

1. Shorted Filter Condenser.
2. Shorted Buffer Condenser.
3. Shorted Rectifier Tube.
4. Shorted "B+" By-Pass Condenser.
5. Grounded Filter Choke.
6. Shorted Transformer Secondary.
7. Ground in Wiring.

If the vibrator does not operate, remove the vibrator and check for the following defects:

1. Low Battery Voltage.
2. Blown Fuse.
3. Burned Switch.
4. Broken "A" Lead.

All of these points may be quickly checked by measuring the voltage between the center tap of the transformer primary and the REED terminal of the vibrator socket. This voltage should read 5.5 volts or more.

If the check is satisfactory, the vibrator should be tested for proper operation either in a vibrator tester or by the substitution of a new Mallory Replacement vibrator. Sticking or shorted vibrators are usually caused by "projections" being built up on the contact points. These "projections" (contact transfer) are the result of an unbalanced condition in the circuit. A careful check of the "buffer" condenser should be made. If this condenser is open or the capacity not as specified, it should be replaced with a Mallory Oil Filled Condenser, Type VB or OT having the specified capacity. *Never change the specified capacity of this condenser* unless specifically instructed to do so.

Low "B" Voltages

Check the points given below as the *cause for low "B" voltage.*

1. Battery Voltage Low.
2. Corroded Fuse Clips.
3. High Switch Resistance.
4. Weak Rectifier Tube.
5. Defective Buffer Condenser. (Caution: See preceding instruction on buffer condenser replacement.)
6. Defective Filter Condenser.
7. Worn Vibrator. (Check in tester or substitute new Mallory Replacement Vibrator.)
8. Check for troubles in radio which will cause low voltage such as shorted cathode resistor, by-pass condenser, shorted transformer, defective tubes, etc.

Intermittent Operation

1. Generally caused by troubles in the receiver, such as defective antenna insulation or connections, defective wiring, defective tubes, etc.
2. Intermittent vibrator operation usually caused by worn vibrator nearing the end of its life.
3. Loose connections in the power pack.
4. Defective Rectifier Tube.

Unusual Mechanical Noise

Unusual mechanical noise from the vibrator may be caused by:

1. Vibrator touching other parts and vibrating against them or causing other parts to vibrate. Correct this trouble with a cardboard pad around the vibrator.
2. An old vibrator nearing the end of its life.
3. Loose case screws, or loose parts in the radio set.

Electrical Hum from Speaker

Hum from the speaker is usually caused by:

1. Defective filter condensers (low capacity).
2. Microphonic Tubes.
3. Microphonic Condensers. (Usually variable condenser.)
4. Loose chassis screws.
5. Poor Grounds in Radio.

Don'ts

1. *Never change the specified capacity of the buffer condenser* (unless circuit matching is carefully checked with oscillograph).

2. *Never* attempt to repair a vibrator. Filing contacts or bending springs destroys the factory adjustment which has been carefully made with expensive instruments.

3. *Never* replace a vibrator until you are sure it is defective.

4. *Never* hesitate to write Mallory for specific information and help.

Important New Service Procedure

When the owner brings in a set in which the fuse is blown, a number of busy and successful auto radio service stations are employing a certain new procedure as standard routine, because it enables them to locate the cause of the trouble quickly.

This procedure is given in detail in what follows, and we heartily recommend it to our readers as a time and money saver. It is a method which lifts this class of trouble out of the realm of "guess," and puts it on a definite basis of measurement. The recommended procedure follows.

A D.C. ammeter of approximately 0-20 ampere range should be connected in series with the "A hot" (ungrounded) lead. The first time power is supplied to the receiver with the ammeter in the circuit care should be taken to see that the polarity of the ammeter is not reversed. In the event that the serviceman has knowledge as to the make and year of the car in which the receiver is used, reference to the battery ground chart in Section 12 (Useful Servicing Information) will give information as to the car ground. For example, if the set is used in a car having the negative bat-

tery terminal grounded, the positive (+) terminal of the ammeter would be connected to the positive (+) test battery terminal, and the negative (—) ammeter terminal would connect to the "A hot" lead from the receiver.

Next, connect a D.C. voltmeter from the "A hot" lead to the receiver chassis to indicate the "A" battery potential.

Remove the customer's vibrator from the set and insert a known good vibrator. Turn the set on and measure the input current and input voltage.

The service information bulletin applying to the set gives the normal rated input current for a certain input voltage, usually 6.3 volts. If the measured input current exceeds the rated input current by more than one ampere (at approximately 6.3 volts), *it is a definite warning that there is something wrong with some component of the receiver other than the vibrator.* (See Case History 6.) If the receiver were allowed to continue running under an excessive input current condition, the vibrator would gradually reach a temperature which would cause its contact arms to lose their temper, its contacts to finally remain in contact (a dead short) and therefore cause the fuse to blow again. To prevent this, turn off the set immediately after the measurement and check for trouble from one of the following sources:

(a) Replace the rectifier tube with one known to be good and check to see whether the input current is reduced to normal.

(b) Check the secondary buffer condensers for opens or shorts and replace if necessary with units having the same capacity.

(c) Check by-pass condensers, especially those in screen grid circuits, for shorts or leakage.

(d) If hash by-pass condensers are used across the elements of the 0Z4 these should be checked.

(e) If a hash by-pass condenser is used between the "B" plus circuit and ground it should be checked.

(f) Check the electrolytic condensers for short circuits.

(g) Check tubes for shorts. Output tubes are especially likely to develop short circuits. Also check the bias voltage on the output tubes. Low bias voltage will cause abnormally high plate current, resulting in short vibrator life.

When it is certain that the receiver is in proper operating condition, the customer's vibrator should be re-installed. If the "B" voltage is at least 90% of that obtained with a new vibrator, the unit is still good and need not be replaced.

To illustrate the value of this service procedure, we have included six excerpts from our case history file. In all of these instances, the simplified procedure just outlined was employed, and resulted in a great saving in service time.

Case History 1—Receiver was brought in with fuse blown. When new fuse of same rating was installed it immediately blew out. Vibrator checked all right. Rectifier tube had short circuit between plate and cathode. With new rectifier tube installed the measured current drain was at rated value and receiver was put back in service.

Case History 2—The fuse was blown when the set was brought in. It was found that the input current of the set was excessively high, though the vibrator, all the condensers, and all the tubes were good. Further check showed that the transformer yielded very little output. When a new transformer was installed the set input current was reduced to normal. In other respects the receiver was all right.

Case History 3—The fuse was blown when the receiver was brought in. Another fuse of the same rating blew out immediately. Substitution with another vibrator made the set operative but the measured input current was abnormally high. Buffer condenser, rectifier tube, and filter system all checked good. Replacement of output tubes reduced battery drain to normal value. Examination of tubes revealed cathode to filament short in one, and screen to plate short in the other. These defects had caused an unusually high current to be drawn through the vibrator and had gradually caused its failure. If the receiver had been re-installed with these tubes still in use, the replacement vibrator would have soon suffered a similar fate.

Case History 4—Receiver was brought in with fuse blown. New fuse also failed with old vibrator. Substitution of new vibrator allowed receiver to operate, but measured input current was abnormally high, and transformer overheated. Checking the dual secondary buffer condenser revealed one section having high leakage when tested with an ohmmeter. Replacement of the buffer reduced current drain to normal value and cured transformer overheating. Here again vibrator failure was caused by defects in some other component, and the replacement unit would soon have been damaged if the operating conditions had not been corrected.

Case History 5—Receiver was brought in with a complaint of erratic operation and short vibrator life. Measurement of input current indicated an increase over rated value. When the "B" supply was checked with an ohmmeter, a partial short was revealed. Further examination showed that a screen by-pass condenser had high leakage. Replacement of this condenser returned the receiver to normal operating condition.

Case History 6—In one instance, the fuse was blown when the receiver arrived, but installation of a new fuse of the same rating restored the set to normal operation. The measured input current was not excessive and the receiver operated for a period of 15 minutes before the new fuse blew out. The installation of a second fuse again made operation possible, and the input current remained at the normal value. However, after about 30 minutes use the second fuse went out. Logically, the only cause for such operation would be a momentary overload such as would arise from a sticking vibrator or arcing in the rectifier tube. In this case the serviceman replaced both units in order to be certain of eliminating the difficulty. Substitution of a known good vibrator or tube, one at a time, and operation of the set over an extended period, would indicate which was at fault.

Vibrator Power Supply Design and Operation

To design a vibrator power-supply that will give satisfactory performance under operating conditions, quite a few factors must first be determined before proceeding with the selection of design limits and characteristics. These are given as follows, and will be elaborated upon further along in the discussion:

A. The type of battery or power-line supply from which it is desired to operate the power unit. This includes the normal voltage under load and also the extremes of voltages to be encountered during operation, which of course is affected by the condition as to whether or not the battery will be on charge during operation, the type of charger and its capacity, whether it is voltage-regulated or not, etc., or if dry-cells or such are to be used.

B. The type of service for which the power unit is intended. This includes a determination of whether the load is a radio receiver for farm, auto, portable, or DC power-line use, which of course ties in with the determination of the battery supply. The type of service is important, because the selection of the proper vibrator type, the expected hours of life, the need for extra economy in battery consumption, or in weight and space, etc., are practically always based upon these considerations.

C. Considered at the same time as the type of service is the type of load, wherein we consider if the output load is very light, such as in portable or small farm types of radio sets; light, as on farm or small auto radio sets; medium, as on average auto radio or power-line radio sets; or heavy, as on deluxe auto radio sets or on transceivers and mobile transmitters. The type of loading also includes determination, in cases of other than radio receivers' or transmitters' plate power loads, if the output is to be used as AC directly into a load instead of being rectified and used from a "tank" circuit such as an electrolytic filter condenser. The operation of radio tube heaters directly from a winding upon the vibrator transformer constitutes an AC load, which radically affects the vibrator operation by upsetting the primary voltage waveform in the transformer—timing condenser circuit as well as being a serious over-load on the vibrator when started "cold" at the same time the vibrator is started. A small AC motor, such as a timing clock mechanism, a beer-coil cleaner device, a dry-disc rectifier for pin-game operation, etc. are all samples of AC loads.

In general, a vibrator power supply for an AC load must be specially designed for the specific application. However, with DC loads and conventional condenser input filter systems, standardized Vibrapacks can be used with perfect satisfaction for all applications within their load limits. "*Vibrapack*" is the registered trade mark of P. R. Mallory & Co., Inc., identifying Mallory vibrator power supply units. The designing of a special power supply for DC load service is warranted only for large scale quantity production where economies through simplification of design are practical.

Knowing the type of load and the type of service, it is possible to estimate the available voltage at the center-tap of the transformer and the vibrator, from experience and calculations, in case only the battery voltage is given in the requirements. In the case of a radio device, for instance, connecting leads, fuses, "A" chokes for interference suppression, and a switch and wiring are all interposed between the battery connection and the power unit. Further, the primary current drawn by the heaters, speaker-field if any, and vibrator will cause a voltage drop and make less input voltage available for conversion to higher-voltage rectification. *The output secured is directly proportional to the input voltage available at the transformer*, and therefore we desire to impress upon the reader the necessity for stating load requirements *at the expected input voltage at the center-tap of the transformer* instead of at a given battery voltage, because the designer ordinarily is not well acquainted with the details of the primary circuit in the set. Along the same line of thought, in the case of a radio device, the design of the smoothing filter in the high-voltage DC should be specified unless the output voltage is given as measured at the first filter condenser. The latter is usually the case, because present practice has been to connect the power-output tube plates and screen-grids to the first filter condenser rather than reduce the voltage available by adding the plate current of these tubes, or tube, to that going through the filter. The size of the first filter condenser, at least, should be noted, since too small a condenser will cause a drop in output voltage.

It is necessary to determine the type of radio tubes being used, if the application is not standardized practice; are filament or heater types used, and what type of rectifier? If filament type tubes are used, there will not be any "no-load" condition existing when the apparatus is turned on; if heater type tubes are used, there will be a no-load condition existing depending in its character upon the type of rectifier, its heating time with respect to the other tubes if a tube rectifier, etc. If a gaseous, cold-cathode type of rectifier is used, it supplies rectified DC at once (under proper conditions for ignition, of course), but has the characteristic of high resistance with low load current, so tends to be self-limiting as compared to a self-rectifying vibrator. Again, if this type of rectifier tube is used, minimum values of "striking" voltage are required, together with minimum values of load current, for proper ignition and low voltage-drop performance. The type most commonly used, the 0Z4, requires a minimum peak ignition voltage of 300 volts and a minimum load current of 30 milliamperes. If filament types of tubes are used in the apparatus or receiver, heated from the same battery from which the vibrator draws its pulsating current, it is necessary to isolate the filament circuit from these pulsations in current (and therefore variations in filament voltage), as outlined previously, to prevent objectionable hum modulation. An iron-core choke should never be placed in the battery supply lead to a vibrator since the inductance of this type of choke is great enough to prevent the proper action of the vibrator in drawing current from the battery. The only exception would be the use of a powdered-iron, high-frequency type of core in the "hash" interference choke to improve its performance.

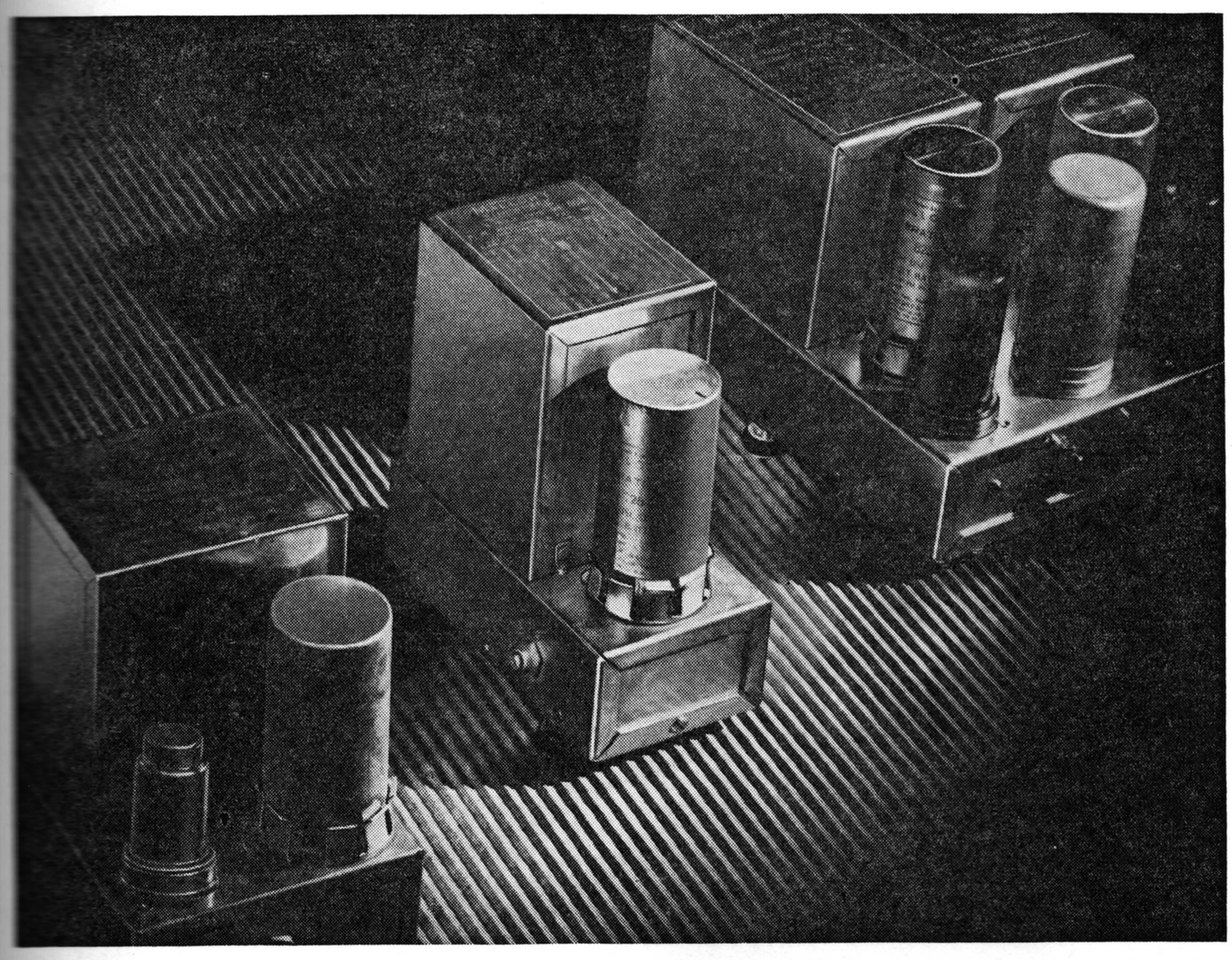

FIG. 19

Readers who are interested in the practical application of vibrator power supplies for powering radio receivers, transmitters, P. A. systems, and for converting AC receivers to battery operation should write for Form E-555-D on Mallory Vibrapacks. The very complete shielding and hash suppression filtering incorporated in Vibrapacks makes installation as simple and as easy as the installation of the conventional AC power supplies.

Shielding and Ventilating

For vibrator power-supplies to be used with heavy-duty apparatus, such as deluxe auto-radio receivers, medium-power portable P. A. systems, etc., it is advisable to determine in advance, if possible, the shielding, ventilation, and temperature conditions under which the finished assembly will have to operate. In all applications for radio receivers, it is absolutely necessary to provide electrostatic and electromagnetic shielding for certain parts of the power-supply. This prevents radiation of interference frequencies in the band of frequencies to be received, or transmitted. Two methods are usually satisfactory. The one that is ordinarily most satisfactory is the provision of a completely enclosed sheet-metal box and chassis on which are assembled the components for the entire power-supply. This sheet-metal is usually of cadmium-plated steel, which provides both electrostatic and electromagnetic shielding. Because the magnetic flux from the power-transformer sprays to a certain extent from the core and coils, it is important that it be as near perfectly shielded as is possible, because this flux is modulated with many higher-order harmonics of the vibrator frequency as well as the fundamental, and is a source of hum and interference. Quite often this shielding takes the form of a drawn-steel can, a spot-welded sheet-iron box, or possibly a seamed-folded tin can, completely enclosing the transformer when tightly fastened to the chassis. This chassis may then be placed inside of a completely enclosed metal box, or may itself form a smaller box inside of which the interference filters, timing condenser, etc. are mounted, such as the Vibrapacks shown in Illustrations Nos. 21 and 22. In either case, the final shield box should have such a design that a complete short-circuited turn in each plane should result when the cover is secured in place. This type of design localizes ground-currents in the chassis and prevents "hash" fields from being set up in the radio chassis caused by common paths for ground currents and radio currents. The hum-smoothing filter choke and condenser can be mounted upon this same chassis, the shielding of the choke depending upon whether or not it is in close proximity to sensitive circuits. The vibrator, of course, is mounted close to the transformer, as is the rectifier tube, if used. The universal use of metal shielding containers for vibrators provides sufficient shielding for this source of radiated interference, if a good RF ground is provided for the can. This is best secured by the use of a grounding cup which consists of a shallow metal cup secured to the chassis by the socket mounting rivets, and possibly by additional soldering. Extending vertically from this cup are short spring fingers which wipe tightly against the can surface. This type of grounding furnishes unipotential conditions to the can and chassis, and thus little current flows to produce a radiating field. Grounding of the can through a ground-strap or lead from the can to the reed-pin of the plug (which is nearly always grounded), provides an electrical ground, but a comparatively poor RF ground. This is because the can potential is held above ground by the voltage-drop in the socket-connection, the prong, and the lead from the socket to chassis ground. This may appear trivial, but has often been proven in practice to be quite troublesome, especially in apparatus wherein components are crowded. The rectifier tubes are practically as bad a source of radiated interference as the vibrator. A shielded tube should be used, or the tube itself located so as to be shielded or isolated by other components. In location, the power-supply should always be as far removed from the antenna circuit of the receiver, or from the high-gain input circuits of the amplifier, as is possible in the space allowed. Good shielding and isolation of the antenna coil is essential, and isolation, or shielding, of the primary power-supply leads and switch is absolutely necessary to secure "hash" free performance.

The housing design, location of components, and ventilation all bear upon the life and performance of the power-supply. Localized heating in the vicinity of the vibrator and electrolytic condenser may cause the ambient temperature around these parts to rise to a

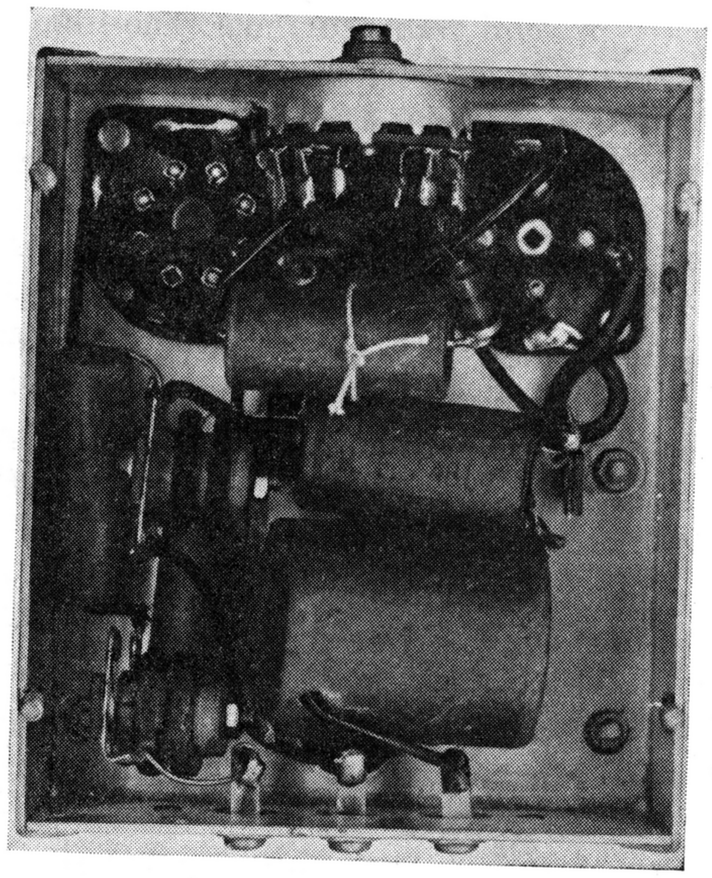

FIG. 20

value, under continuous duty, which will damage them and cause failure. For this reason, ventilation of the power-pack is essential, with the location of such heat-producing components as the power-output tubes and the speaker-field as far from the power-unit as is possible. Metal heat baffles, good parts arrangements, and louvres to provide chimney cooling effects, aid in this. In cases where the entire power unit is assembled on the main chassis, without the sub-chassis previously described, it is desirable that the condenser and vibrator be mounted near the lower portion of the chassis and the output-tubes, rectifier, and transformer be mounted above them. This of course is in the event that the chassis is mounted vertically instead of horizontally, as in the case of many automobile receivers. Plenty of ventilating louvres or holes should be provided in both the top and bottom, or in the lower portions of the sides, to permit easy circulation of air. The general rule with regard to maximum allowable temperatures has been that the ambient temperature around the vibrator can and electrolytic condenser must never exceed 85 degrees Centigrade on continuous operation at the highest input voltage that will be encountered in service. At this point deterioration begins quickly, so that a value much below this should be provided to insure best results.

In concluding this description of Vibrator Power Supplies and the theories behind their operation, it would be well to illustrate the points brought forth in the preceding sections with physical examples of production units that have been performing satisfactorily in field service. The Mallory Vibrapacks illustrate the feasibility and practical performance of the recommendations that have been propounded herein. Of course, it is realized that these particular examples represent separate power units, yet, it is well to remember that the same performance can be secured with an integrally built power unit if the same precautions and care are taken in laying out and constructing the design.

This remark, of course, is with reference to factory production models of commercial manufacture where laboratory development expense is an insignificant portion of the total cost of production. The designing of electronic apparatus with built-in vibrator power supply equipment is one of the most difficult tasks of modern radio engineering, and to the manufacturer who requires a power supply for some model which will be carried into limited production, or for the amateur or serviceman, the adoption of a separate unit vibrator power supply, or Vibrapack, is to be recommended. With these power supplies the expensive engineering has already been done, and installation has been reduced to merely a matter of following printed instructions.

Illustration No. 19 shows three designs of individual power units constructed along the recommended lines. From left to right is a heavy-duty tube-rectifying unit, a heavy-duty self-

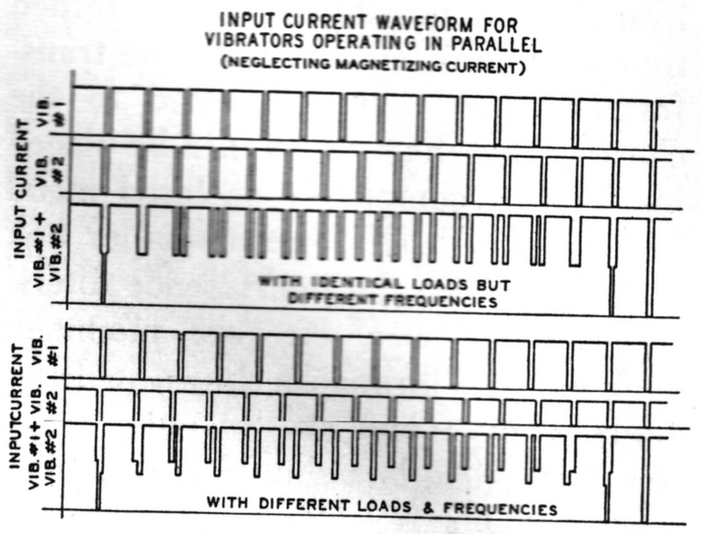

FIG. 24

rectifying unit, and a dual tube-rectifying extra-heavy-duty unit. These designs illustrate the closed-chassis type of construction, the shielding of the transformer and vibrator, and the use of a tap-switch originated by Mallory to efficiently adjust the output voltage on the single-vibrator units.

Parallel Operation

It is interesting to note in this connection that it is entirely practical to operate two or more similar vibrators in parallel to secure additional output from a power-supply unit. These may be either tube or self-rectifying types, each type having its own advantages. The self-rectifying unit delivers power instantly without added filament-heater battery drain or tube plate-drop, but, when used with a load having heater-type tubes, has a high no-load voltage condition to contend with. The interrupter type unit can be used with cold-cathode rectifier tubes, such as the 0Z4, to deliver instantaneous power to the load, with some self-regulating effects on no-load, and no additional heater drain. With heater-type rectifier tubes, the no-load condition can be con-

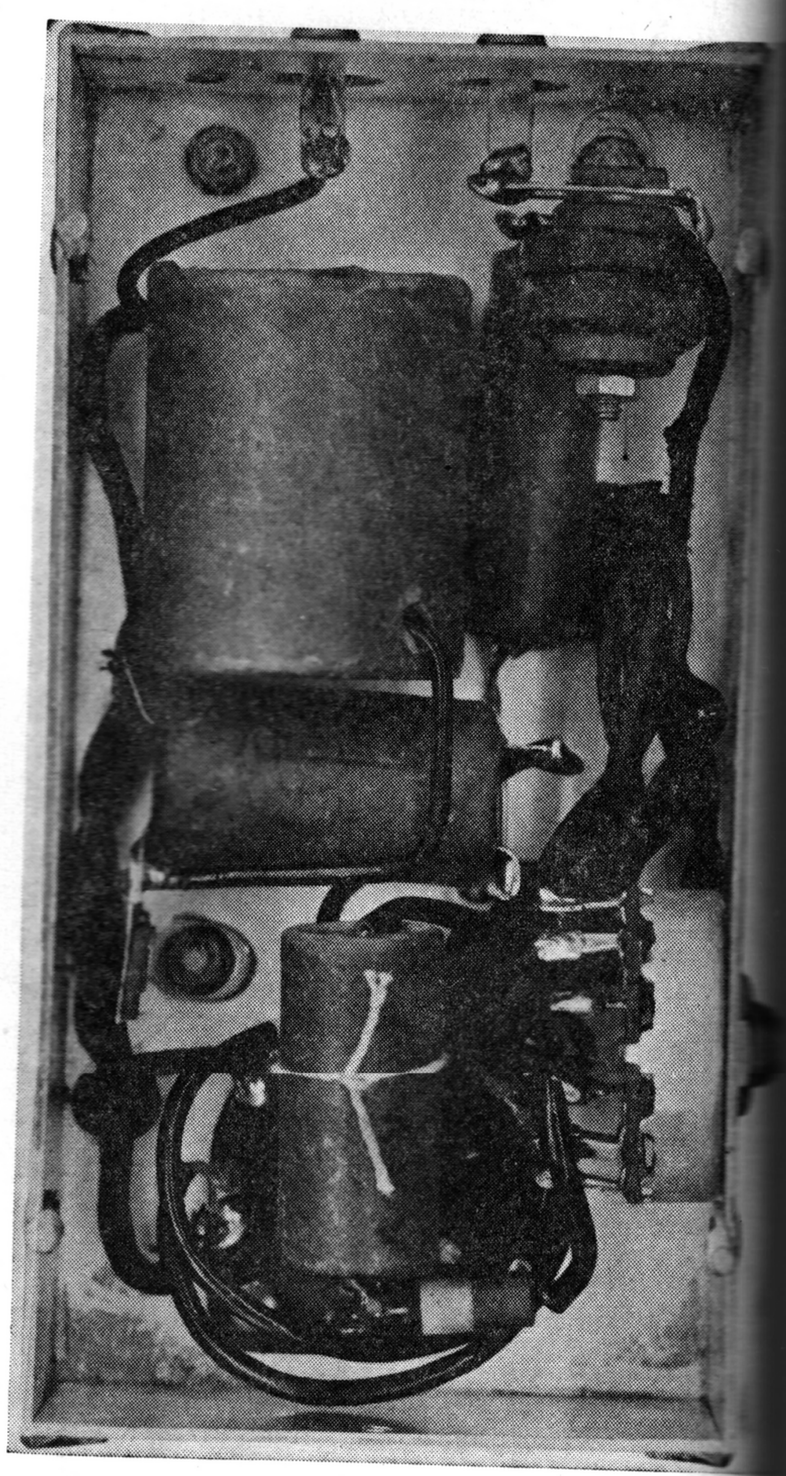

FIG. 21

trolled at the sacrifice of somewhat higher battery drain. By using identical transformers and circuits, commercially similar vibrators can be operated into their individual circuits and the outputs paralleled. It is usually wise to operate into a high capacity first filter condenser, or individual filter units, in order to reduce the "beating" between the units. Individual filter units also tend to equalize the loading upon the two or more power units comprising the power-supply, and this is a requirement when operating with Type 0Z4 rectifier tubes in order to get each to carry load current.

The design of the primary circuit hash filters, etc., is very important for satisfactory operation. Individual hash chokes and condensers, fuses, etc. should be used to keep the common path for primary current to a minimum of both length and resistance. The heavy pulsations in the primary circuit beat against each other, creating a tendency for erratic vibrator operation and short life, combined with erratic output. With common chokes, fuses, etc., the interference between vibrators is usually so bad as to be objectionable. Illustration No. 24 shows the oscillographic pattern resulting from the measurement of input current to a dual vibrator power unit under full load, neglecting the slight variations caused by magnetizing currents to the two transformers. In the upper diagram is represented the result of equal loading of the two vibrators, but with different frequencies, while the lower diagram shows the result of unequal loading and different frequencies also. This difference in frequency may be somewhat magnified for the purpose of illustration, being 8 cycles in 120, but would be quite possible in production. This would result in approximately 24 heavy beats a second with a very irregular ripple-beat the remainder of the time, as illustrated. The operation of three, or more, vibrators in parallel would result in still worse beating, both in the input and output.

Careful laboratory investigation shows, however, that if the input and output circuits of a multiple unit vibrator power supply are properly isolated, the effects mentioned in the preceding paragraph are minimized to a point

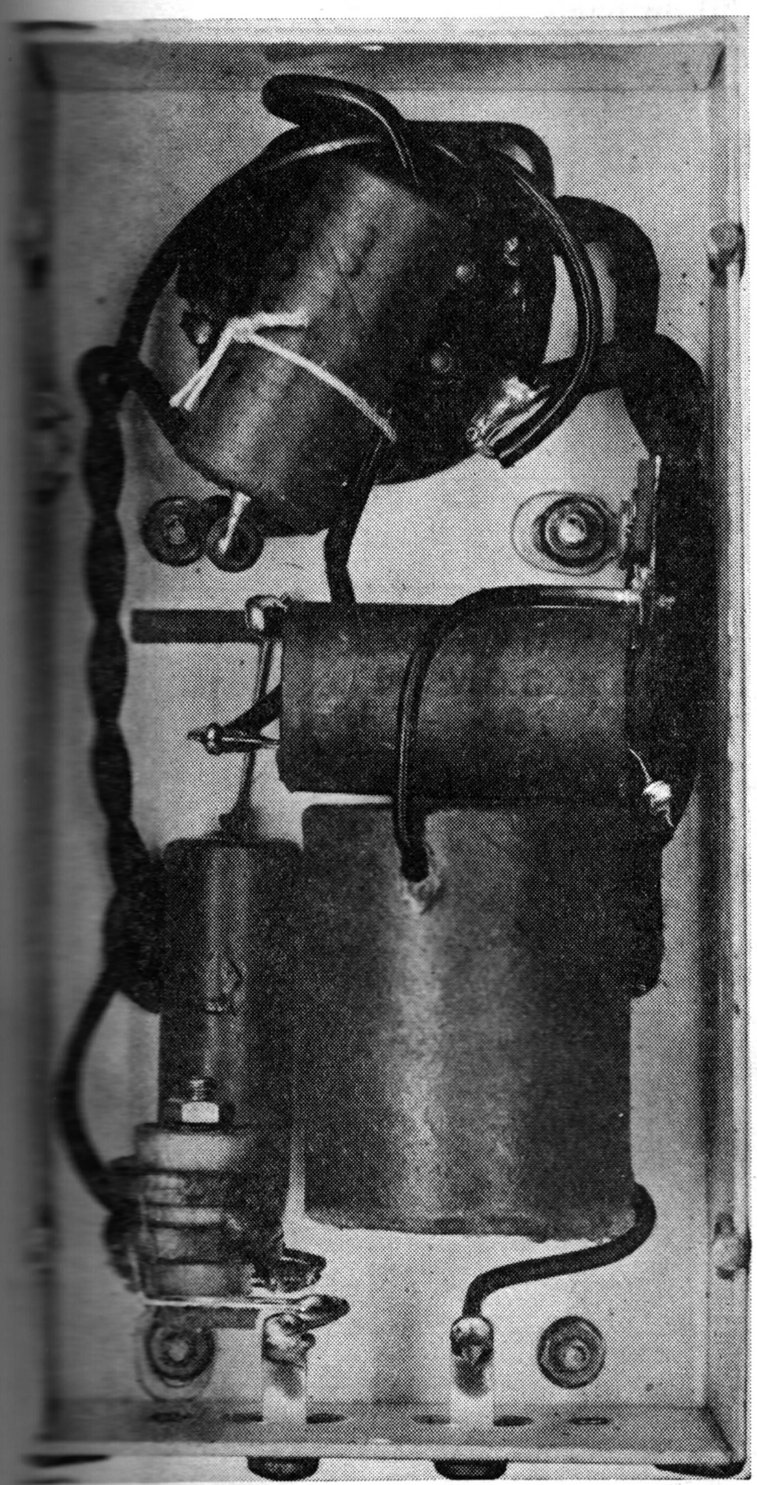

Fig. 22

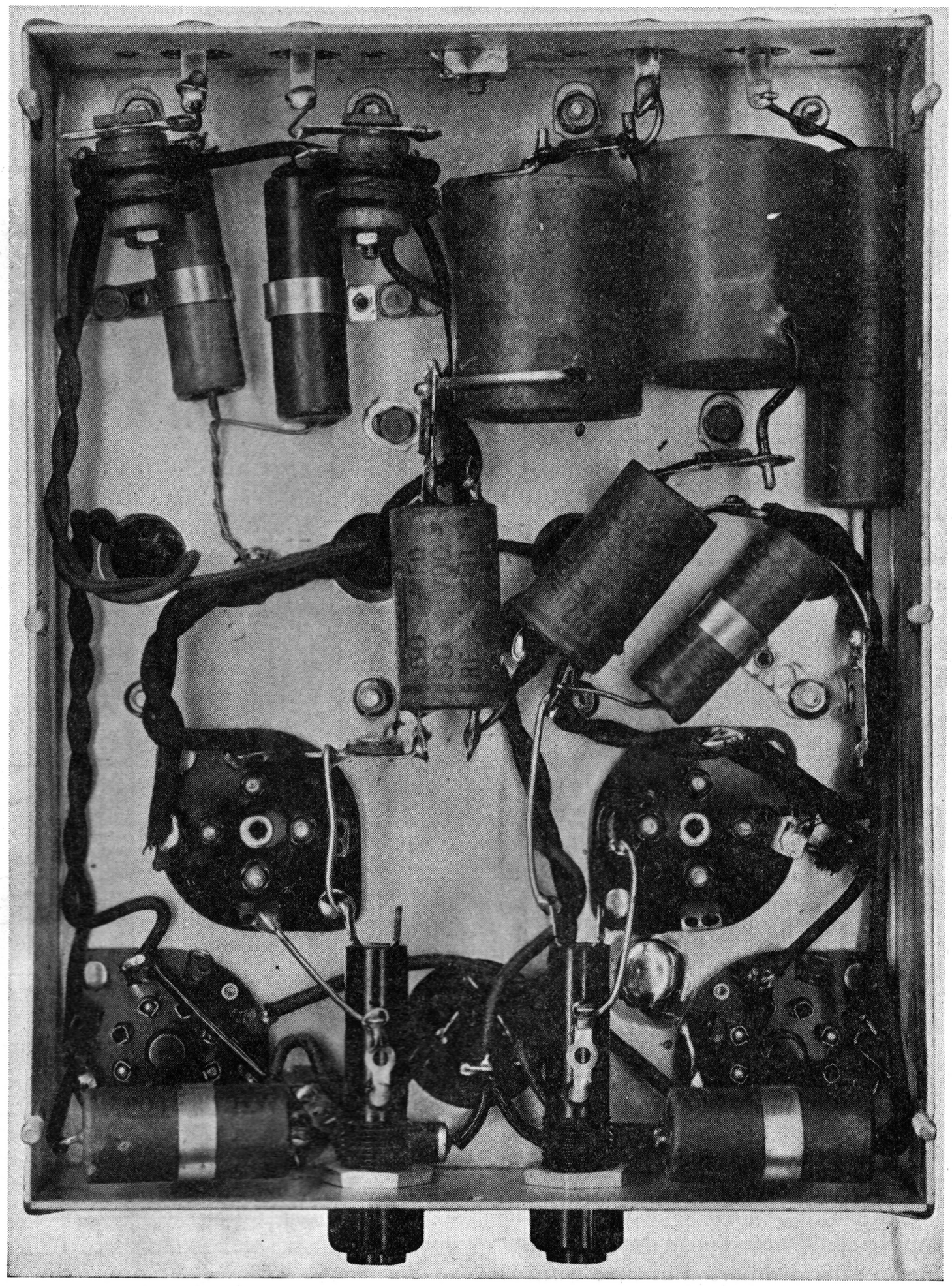

Fig. 23

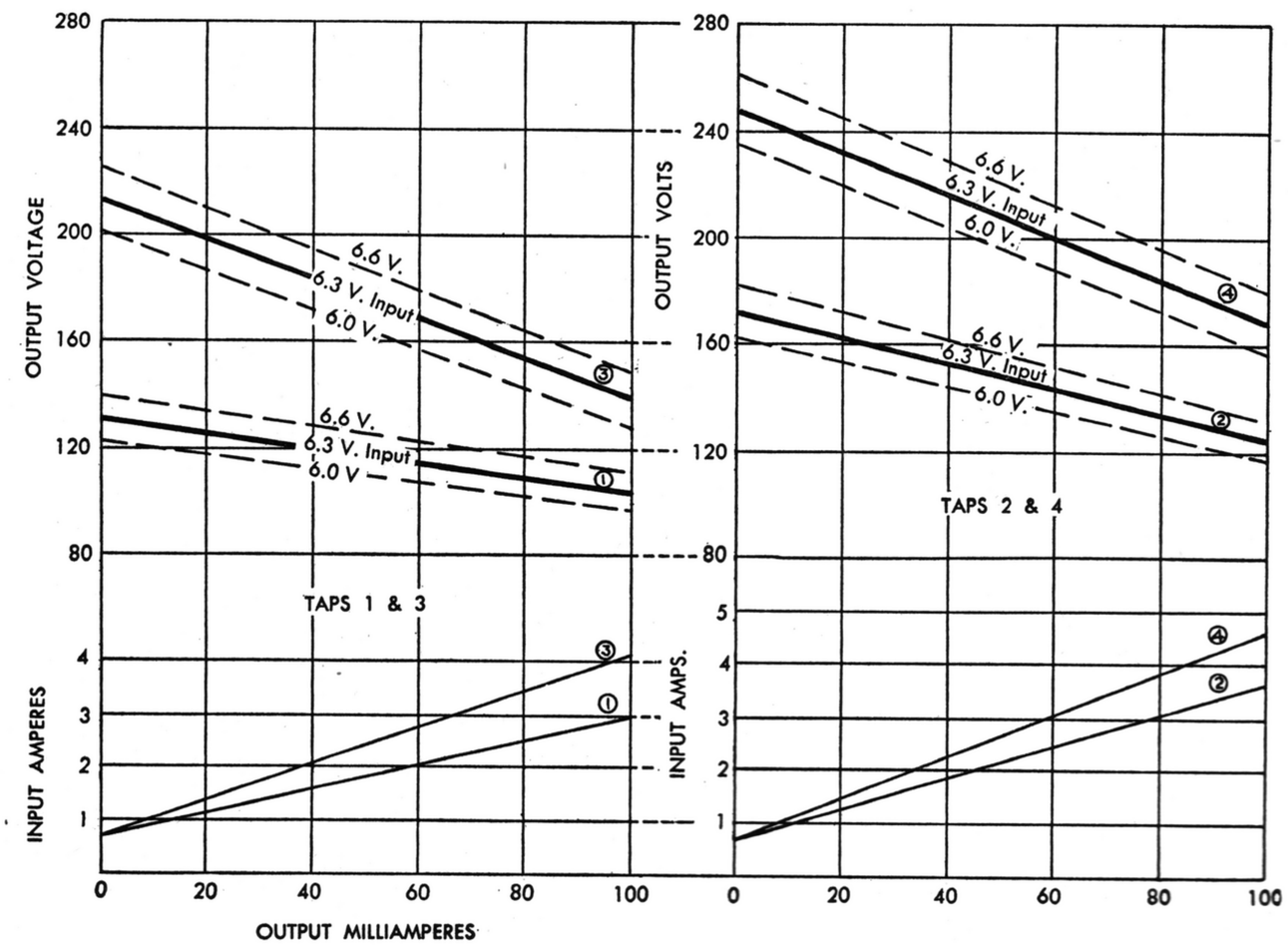

FIG. 25A—OPERATING CHARACTERISTICS OF VP-551

where they are unobjectionable. Each vibrator then assumes its normal portion of the load so that satisfactory vibrator life is secured; and the combined power output is amply smooth for any practical application. This fact has been amply substantiated in actual service by the performance records of dual Vibrapacks types VP-555 and VP-557 which are widely used under heavy load conditions to operate police mobile radio transmitters, etc.

Fusing

While all vibrator power units should be fused for protection to the various components and the battery, it is essential that dual units be individually fused with the proper fuse. There are two reasons for this. There is an appreciable amount of resistance to a fuse and its holder. The use of separate fuses provides additional isolation for the two halves of the supply through the elimination of common impedance. But a more important consideration is the fact that should failure of any component render inoperative one side of a dual pack, the fuse for the other section will blow and thus prevent a single vibrator from assuming the full load of the entire power supply. It is obvious that a single section of a dual power supply could not supply double output for an extended period of time without being damaged.

Chassis Construction

Illustrations Nos. 20, 21, 22, show the methods of assembly and construction for the interior of the Vibrapacks illustrated in the previous photograph. Fig. 20 shows the tube-rectifying type with tap-switch, and "A" hot, "B" plus, and "B" minus RF or hash filters. Of course, the tube-rectifying type is intended primarily where "B" minus is desired off of ground potential. Fig. 21 shows the self-rectifying type with tap-switch and RF filters while Fig. 22 shows the same type of power unit for a single range of voltage output, therefore not requiring the tap-switch. Fig. 23 shows the interior arrangement of a dual power unit, with individual primary RF filters, fuses, and output resistance smoothing filter. An individual connection and filter is provided for the tube heaters so that they may be controlled separately with the heaters of the tubes in the amplifier or transmitter.

While the output characteristics and input loads corresponding to same are shown in Illustrations Nos. 25, 26, 27, circuit diagrams representative of the three types of Vibrapack power units are shown in Illustrations Nos. 28, 29, 30 on pages 83 and 84.

Operation of Vibrapacks on AC Lines

Considerable discussion has occurred at times regarding the operation of Vibrapack type of power units on AC power lines. The possibility of supplying an additional primary winding on the vibrator transformer for connection to 115-volt AC lines has been suggested, and in some instances done.

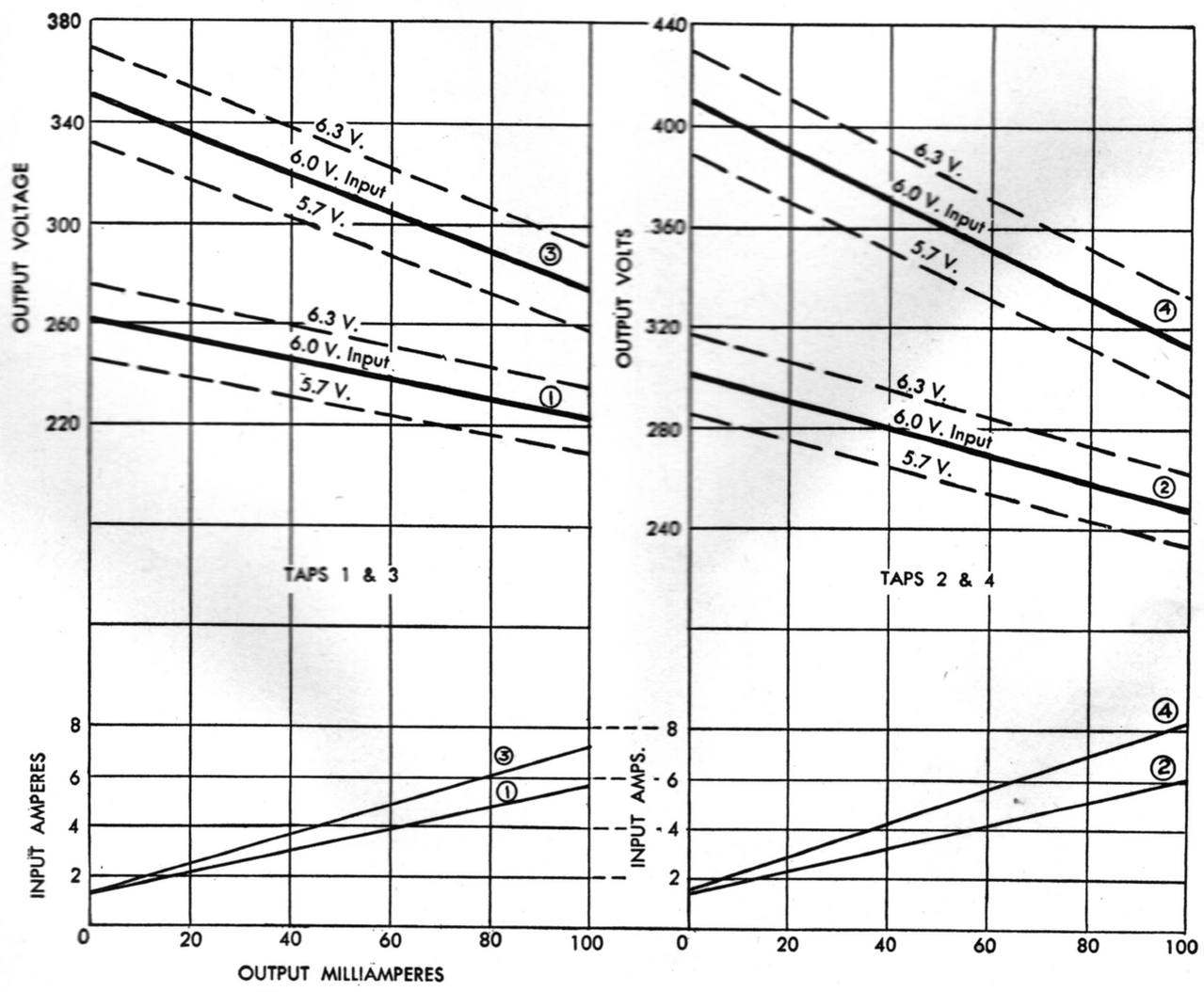

FIG. 25B—OPERATING CHARACTERISTICS OF VP-552

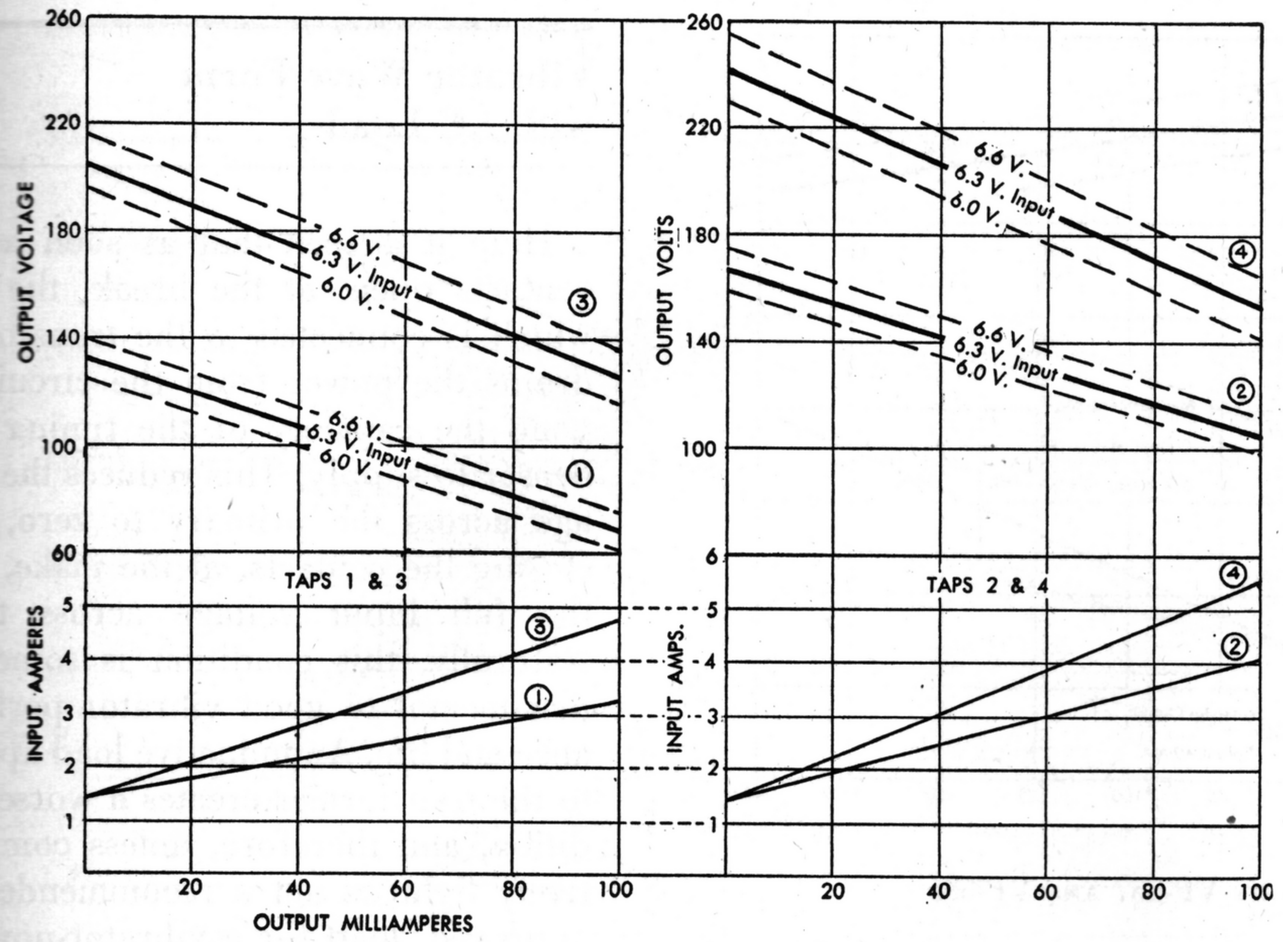

FIG. 25C—OPERATING CHARACTERISTICS OF VP-553

The additional AC winding requires considerable window space in the transformer, and a winding for operating the tube heaters is required unless type 0Z4 tubes are used. It is felt that for the occasional use to which this winding would be put, its extra cost, space requirements, and other complications, do not warrant its use. It has been determined that, if a step-down AC transformer is provided, which will supply 10 volts AC, RMS, 60 cycles, at the load current required, easy adaptation of standard 6-volt tube rectifying power units will be possible to 115-volt AC line service. This 10 volts is applied to each transformer, across the entire primary, by removing the vibrator and plugging in instead an adaptor having the AC cord connected to the two small pins of the standard interrupter vibrator base, or to the equivalent pins of an unconventional base, should one be used. The value of 10 volts is used instead of the 12.6 volts DC value for the whole primary winding because of the difference in waveform between the sine-wave AC and the square-wave DC. The tube heaters, if desired, may be run from the same AC source with a dropping resistor to reduce the voltage to the correct value. This method allows maximum efficiency to be secured from the vibrator power unit when operating from DC, and thus the maximum output with safety, and still permits AC operation without complicated switching means, etc.

Circuits for Special Applications

Illustration No. 31, page 84, shows a circuit diagram for accomplishing the same purpose as that just discussed, that is, operating a radio receiver from both battery and AC sources. This circuit was developed several years ago for use with household receivers where no power-line service was available, but where the owner might have same before the usefulness of the receiver was gone. In this case a high-voltage AC winding was included, controlled by a two-position switch which also controlled the primary DC circuits simultaneously. The heaters were run from the battery when on DC operation, and from a portion of the DC primary when on AC operation, thus eliminating one winding. It is also not necessary to remove the vibrator from the socket when operating in this circuit.

Illustration No. 32, page 85, shows a circuit diagram for a Voltage Doubler system developed to permit higher output voltages than are permissible with the commercial type of self-rectifying vibrator or low-heater-power rectifier tube. The application usually involves low output current, with a medium wattage, and, therefore, the unit may safely be supplied by a single vibrator. The two rectifier tubes must have individual heater windings upon the transformer, in order to protect them from voltage breakdown, but a tube similar to the 6ZY5G with only 0.3 amperes drain, or 1.8 watts apiece, can usually be used, thus reducing the AC loading upon the vibrator, and permitting fairly satisfactory life to be realized. The output voltage is therefore limited by the plate to cathode breakdown voltage characteristics of the tubes.

The circuit diagram shown in Illus-

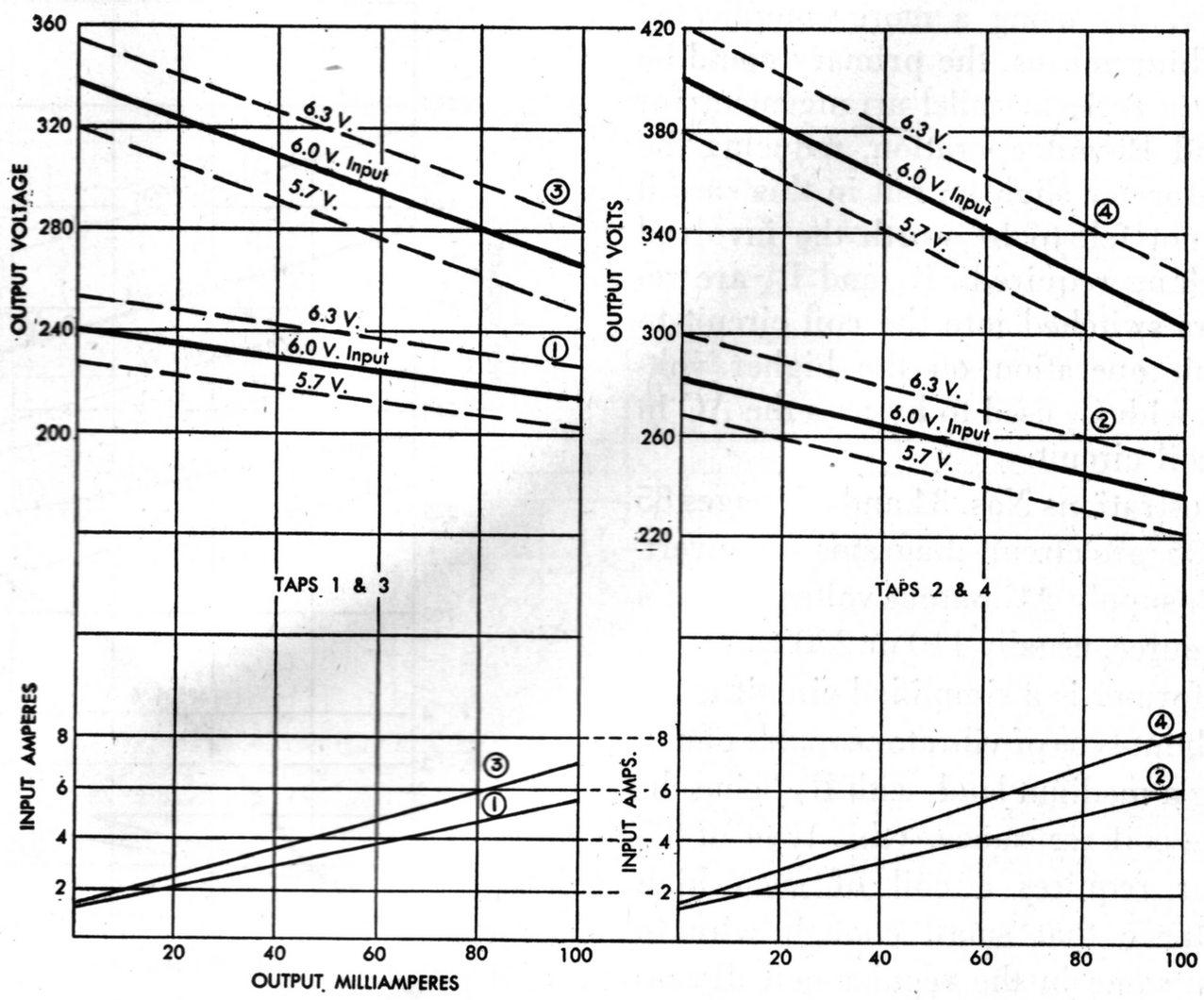

FIG. 25D—OPERATING CHARACTERISTICS OF VP-554

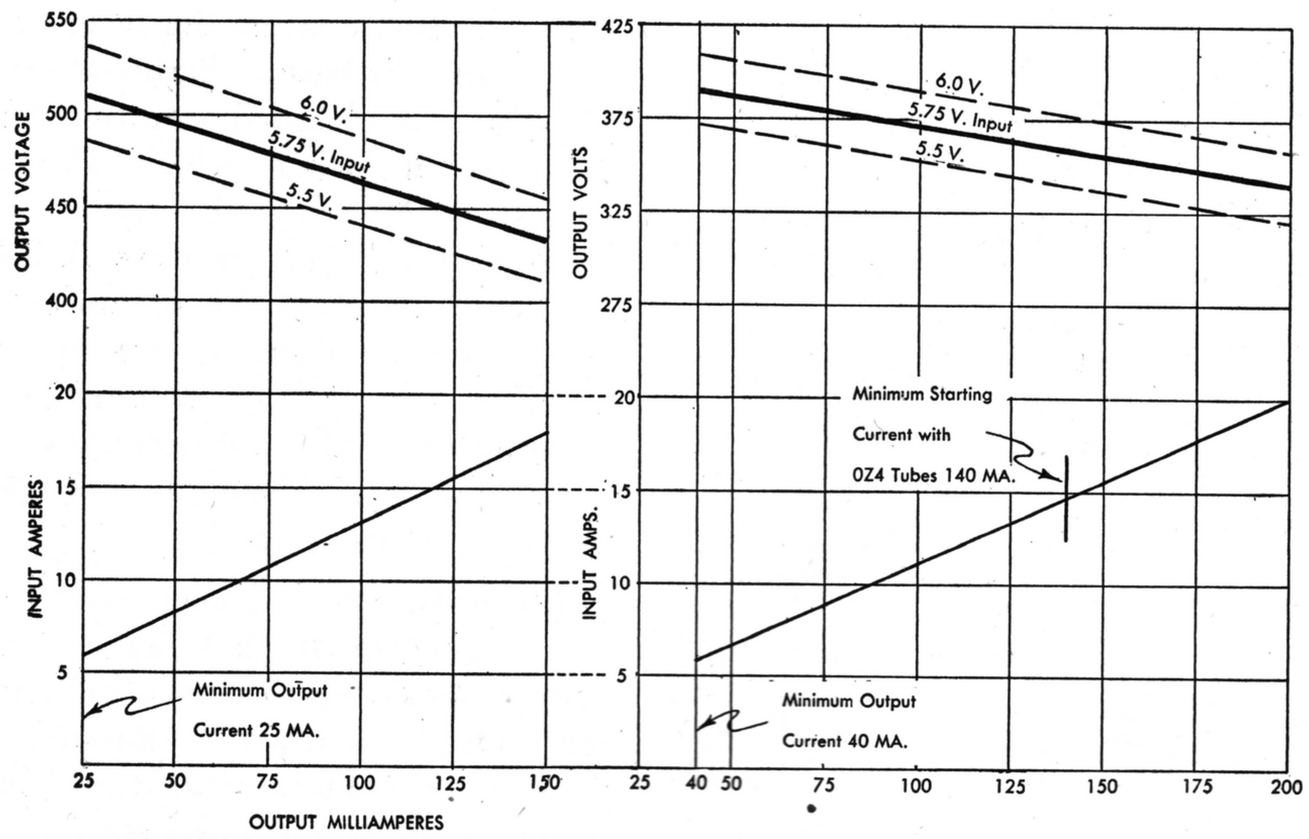

FIG. 26—OPERATING CHARACTERISTICS OF VP-557 AND VP-555

tration No. 33, page 85, gives a satisfactory method of operating one vibrator power-supply on more than one voltage input. The percentage voltage range covered should not be too great, or too large a per cent of the input current will be coil current, in as much as the coil of the vibrator must be wound for the lowest voltage of operation. This high current on the highest input voltage has the tendency to unbalance the primary magnetization characteristic. The unit shown was developed to provide a power source for operating 110-volt DC razors from a 6-, 12-, or 32-volt battery, using a self-rectifying vibrator. By using a more complicated switching means, the primary could be made a series-parallel arrangement for 6- and 12-volt operation, reducing the transformer slightly, but in this case it was not felt to be worth the involved switching required. R_1 and R_2 are resistors switched into the coil circuit to permit operation on the higher voltages, with C_4 used to by-pass the AC in the coil circuit.

Illustrations Nos. 34 and 35, pages 85 and 86, are circuit diagrams for inverters to supply AC output voltage from a DC source, usually 110 or 220 volts DC. The former is a simplified circuit using the shunt-type of vibrator capable of carrying a medium load, with R_1 being the series coil resistance, (this type of vibrator requires a coil of such high resistance that small enough wire to attain same in the regular coil dimensions is not practical), and C_3 being the AC by-passing condenser. C_2 are primary point condensers of very low capacity, and C_1 is the timing capacity. When operating into an AC load, it is necessary to know the type of load, (whether capacitive or inductive), and its value before being able to accurately set the values for C_1 and C_2, as well as design the correct transformer. For operating into a resistance load, similar to the power-supply of an AC radio receiver, the primary voltage waveform becomes as shown in Illustration No. 35.

Vibrator Wave Form with AC Load

Here it is seen that as soon as the contacts open, at the break, the load which is connected to the transformer drains the power from the circuit beyond the capacity of the timing condenser to supply. This reduces the voltage across the primary to zero, thus closing the contacts, at the make, with the full input voltage across them. Naturally, this condition is somewhat detrimental to good vibrator performance and life. An inductive load applied to the transformer creates a worse condition, and therefore, unless comparatively light, is not a recommended, or approved, load for a vibrator-powered inverter. Operation of motors, etc., universally results in damage to the vibrator unless the inverter is expressly designed for that purpose, because of the extreme starting load imposed by such devices.

The final circuit diagram of Illustration No. 36, page 86, shows an inverter using a larger, separate-driver type of vibrator, capable of handling higher powers than the one just described. In this case the coil requires no added resistance for 110 volts, but does require same for higher voltages, being R_1 in

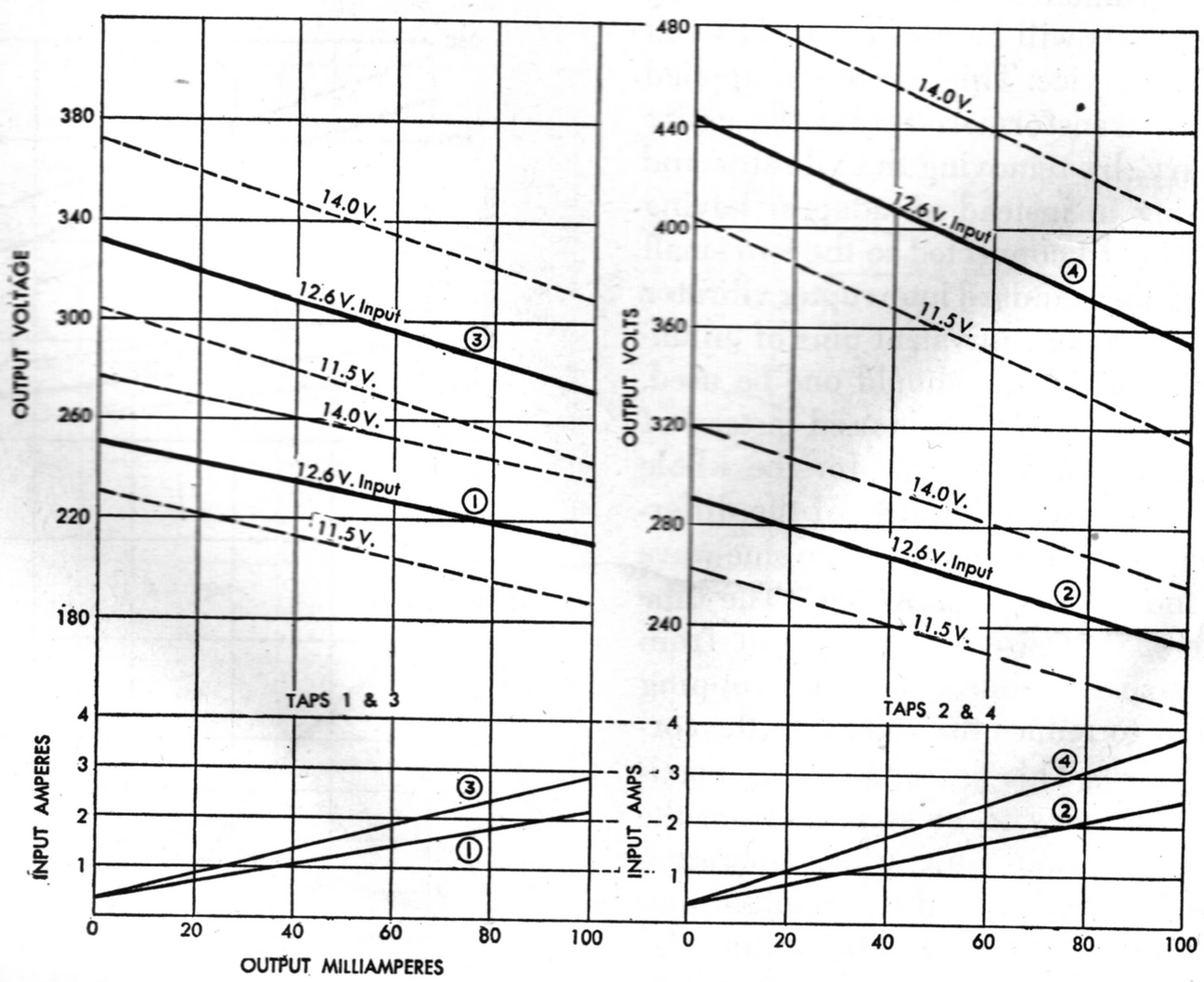

FIG. 27A—OPERATING CHARACTERISTICS OF VP-G556

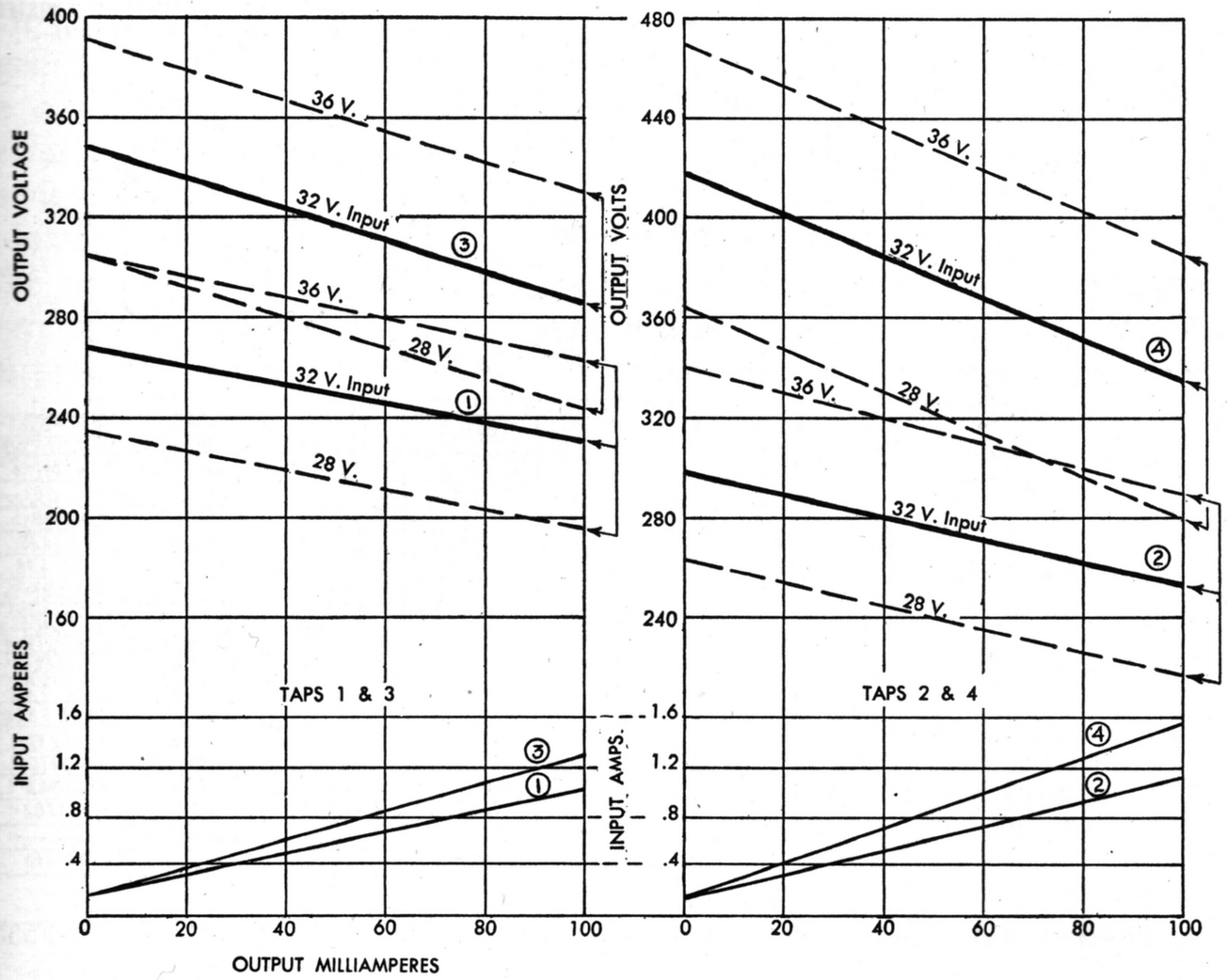

FIG. 27B—OPERATING CHARACTERISTICS OF VP-F558

the diagram. In this circuit a transformer and switching arrangement is provided for operation on either 110 or 220 volts DC, with C_1 being the timing condenser and C_2 the point condensers. C_3 and R_3 are used across the driver-contacts to prevent erosion and transfer. Again, the primary may be made a series-parallel arrangement with more involved switching.

Other possible applications will come to mind of the reader. Among them will be the operation of neon (and other luminous gas) tubes as signs, warnings, etc. This has been done very successfully in the past by means of high leakage inductance types of transformers, similar to the AC types used for the same purposes, wherein the tube is ignited by the high induced voltage of the unloaded secondary but which has its maximum load current controlled by leakage strips of transformer iron inserted in the window between the primary and the secondary windings which are wound in separated coils. This type of construction furnishes magnetic shunts which limit the output.

Future Developments

From all this, it will be evident that the design possibilities and the field of application for the vibrator power supply have been barely touched. What the future may bring, no one knows. Each year brings new applications wherein the vibrator power supply serves better than any other forms of power conversion equipment. The Mallory Laboratory is always on the alert for new developments, and progress is governed only by the necessary economic consideration that the potential market justifies the development expense.

RF Interference Suppression

Perhaps the biggest "bugaboo" or difficulty in the application of Vibrator power-supplies to radio receiver operation, even for engineers and designers experienced in the art, is the matter of RF interference suppression. Fundamentally there are only a few basic rules that must be observed, with a considerable number of variations that must be predicated upon the nature of the particular application under consideration. In other words, methods that would be ideal from the standpoint of suppression may not be practical from the standpoint of cost in low-priced receivers, methods that may be used on heavy current drain power units may not be acceptable on light power applications where efficiency is important, and in general some compromise is usually necessary.

These basic fundamentals can be listed as follows, although probably none are more important than others: First, proper and complete magnetic and electrostatic shielding of the components of the power unit and of the complete unit; second, proper selection of grounds in both the power-unit and the receiver to reduce or eliminate coupling and radiation; third, proper

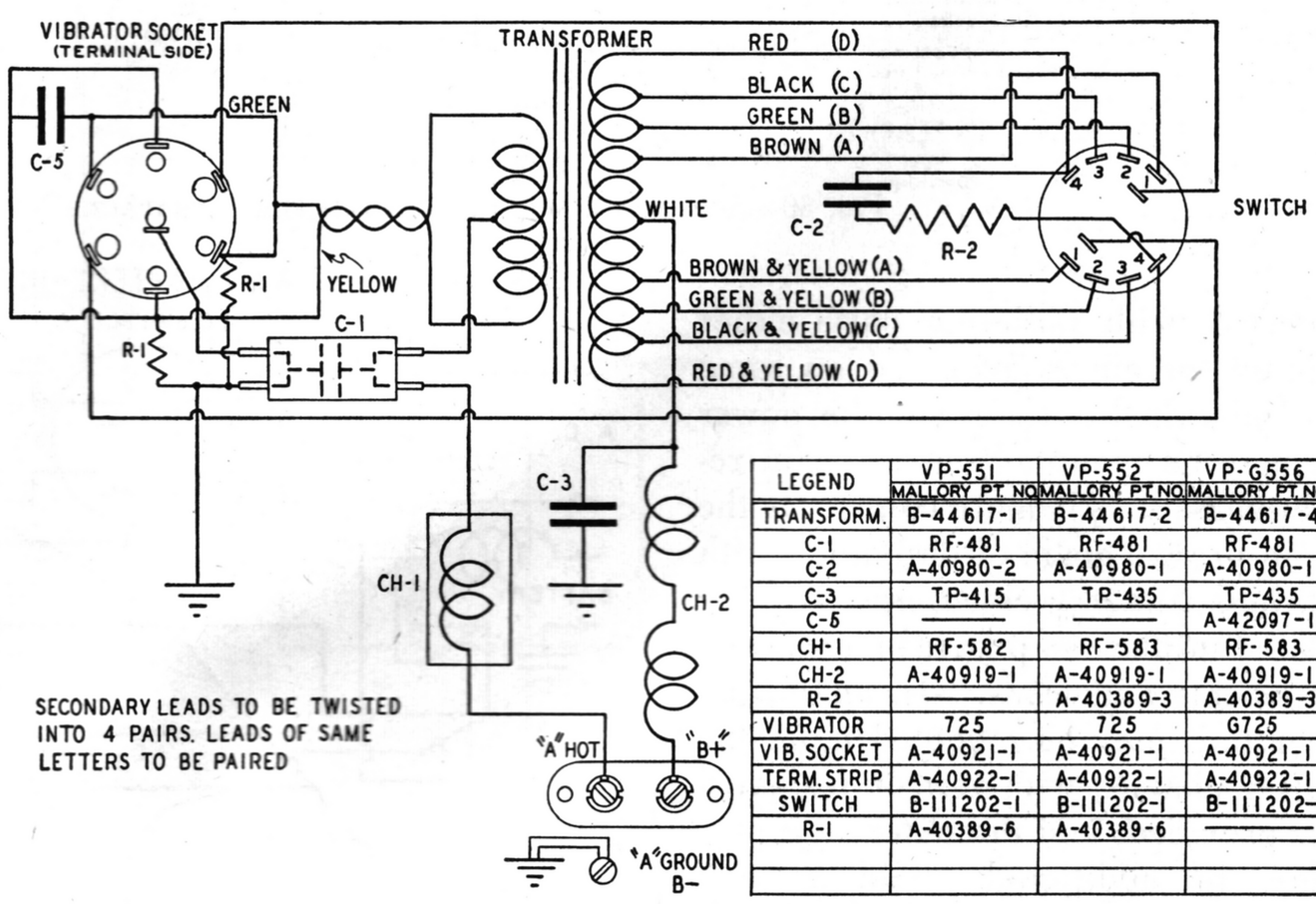

LEGEND	VP-551 MALLORY PT. NO.	VP-552 MALLORY PT. NO.	VP-G556 MALLORY PT. NO.
TRANSFORM.	B-44617-1	B-44617-2	B-44617-4
C-1	RF-481	RF-481	RF-481
C-2	A-40980-2	A-40980-1	A-40980-1
C-3	TP-415	TP-435	TP-435
C-5	———	———	A-42097-1
CH-1	RF-582	RF-583	RF-583
CH-2	A-40919-1	A-40919-1	A-40919-1
R-2	———	A-40389-3	A-40389-3
VIBRATOR	725	725	G725
VIB. SOCKET	A-40921-1	A-40921-1	A-40921-1
TERM. STRIP	A-40922-1	A-40922-1	A-40922-1
SWITCH	B-111202-1	B-111202-1	B-111202-1
R-1	A-40389-6	A-40389-6	———

FIG. 28—SCHEMATIC WIRING DIAGRAM FOR VIBRAPACKS Nos. VP-551, VP-552, VP-G556

and complete filtering in the leads to and from the power-unit; and fourth, proper orientation and shielding of the receiver coils and transformers, etc., to prevent coupling to the power-unit.

Shielding of Components

Shielding methods have been discussed at a previous point, but to summarize briefly, we find that the power unit should be provided with some method of securing a good magnetic shield for all chokes and transformers, including leads, and an electrostatic shielding means that provides for a short-circuited turn in the shield in each plane or direction. This may take the form of a separate chassis and cover with all sides enclosed and electrically connected, with radiating parts either enclosed therein or mounted on same with individual covers. Or, the power unit may be mounted on the main receiver chassis, as is more commonly the case in present stage of designing, with partitions either welded, screwed, or soldered in place to provide a cover for components and leads. Or, again, the power unit may be mounted upon the receiver chassis, with few or no partitions provided, and the outer case providing the additional shielding to a more or less satisfactory degree, with metal spring-wipers, bonds, screws and studs, etc., completing the electrical cir-

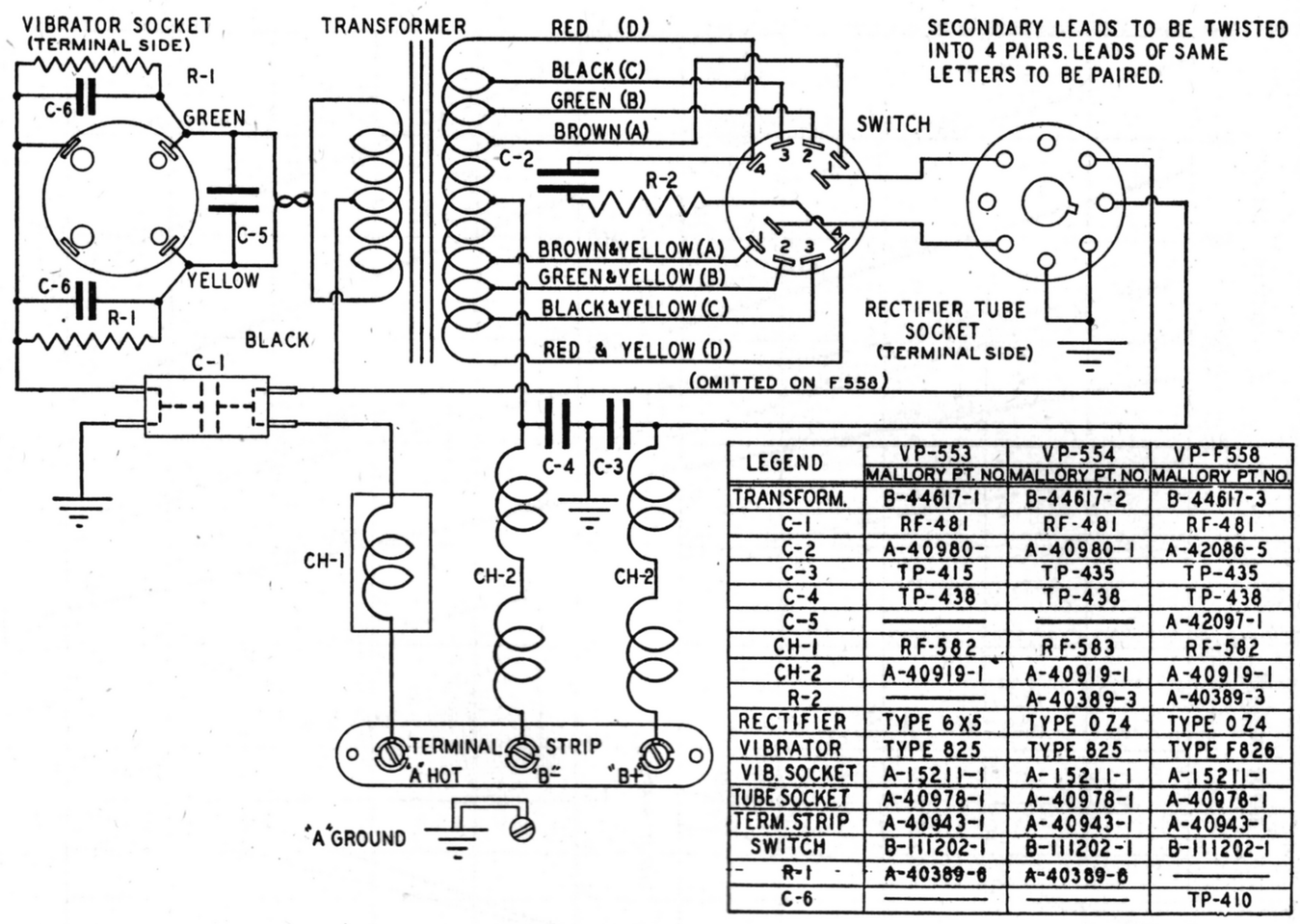

LEGEND	VP-553 MALLORY PT. NO.	VP-554 MALLORY PT. NO.	VP-F558 MALLORY PT. NO.
TRANSFORM.	B-44617-1	B-44617-2	B-44617-3
C-1	RF-481	RF-481	RF-481
C-2	A-40980-	A-40980-1	A-42086-5
C-3	TP-415	TP-435	TP-435
C-4	TP-438	TP-438	TP-438
C-5	———	———	A-42097-1
CH-1	RF-582	RF-583	RF-582
CH-2	A-40919-1	A-40919-1	A-40919-1
R-2	———	A-40389-3	A-40389-3
RECTIFIER	TYPE 6X5	TYPE 0Z4	TYPE 0Z4
VIBRATOR	TYPE 825	TYPE 825	TYPE F826
VIB. SOCKET	A-15211-1	A-15211-1	A-15211-1
TUBE SOCKET	A-40978-1	A-40978-1	A-40978-1
TERM. STRIP	A-40943-1	A-40943-1	A-40943-1
SWITCH	B-111202-1	B-111202-1	B-111202-1
R-1	A-40389-6	A-40389-6	———
C-6	———	———	TP-410

FIG. 29—SCHEMATIC WIRING DIAGRAM FOR VIBRAPACKS NOS. VP-553, VP-554, VP-F558

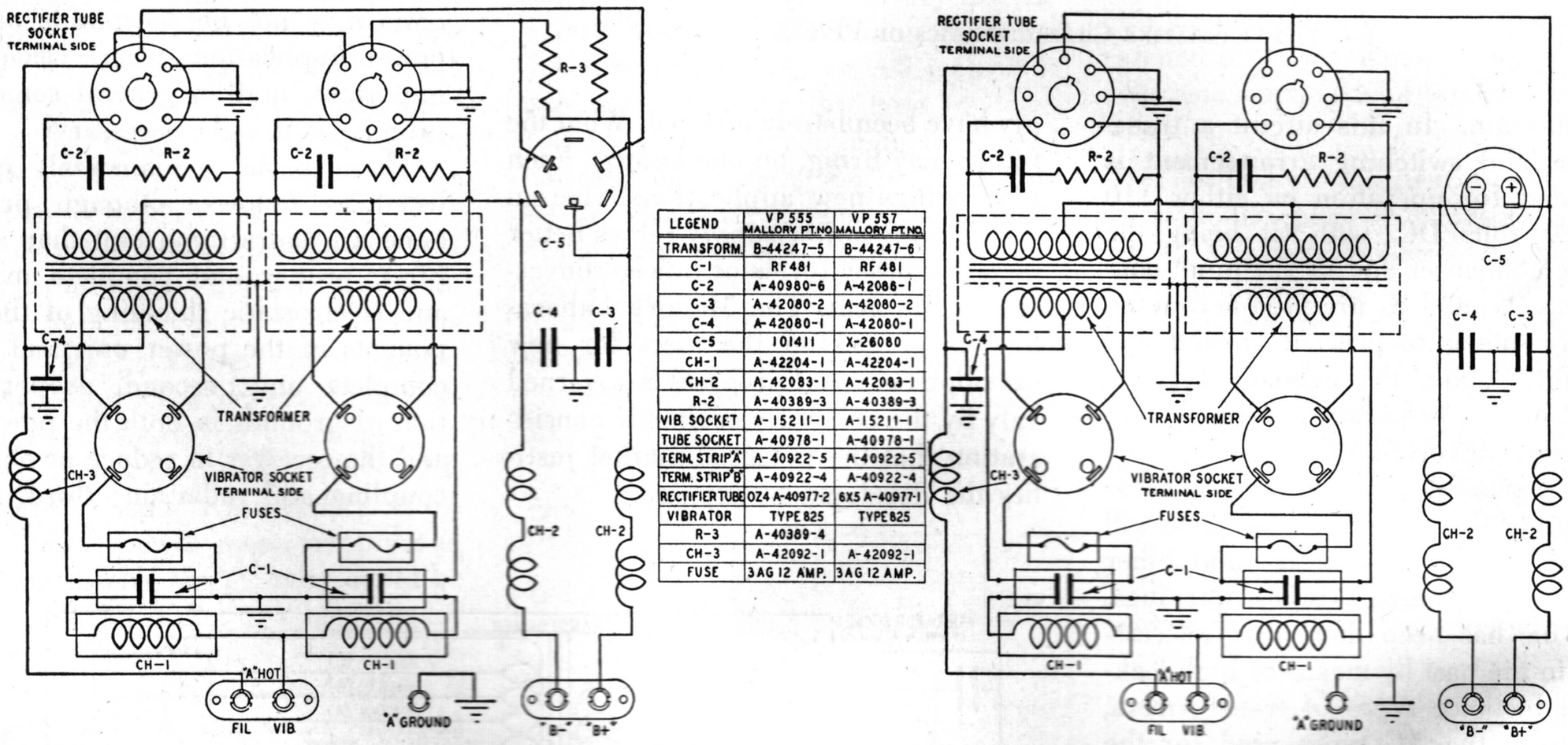

LEGEND	VP 555 MALLORY PT. NO.	VP 557 MALLORY PT. NO.
TRANSFORM.	B-44247-5	B-44247-6
C-1	RF 481	RF 481
C-2	A-40980-6	A-42086-1
C-3	A-42080-2	A-42080-2
C-4	A-42080-1	A-42080-1
C-5	101411	X-26080
CH-1	A-42204-1	A-42204-1
CH-2	A-42083-1	A-42083-1
R-2	A-40389-3	A-40389-3
VIB. SOCKET	A-15211-1	A-15211-1
TUBE SOCKET	A-40978-1	A-40978-1
TERM. STRIP "A"	A-40922-5	A-40922-5
TERM. STRIP "B"	A-40922-4	A-40922-4
RECTIFIER TUBE	OZ4 A-40977-2	6X5 A-40977-1
VIBRATOR	TYPE 825	TYPE 825
R-3	A-40389-4	
CH-3	A-42092-1	A-42092-1
FUSE	3AG 12 AMP.	3AG 12 AMP.

FIG. 30—SCHEMATIC WIRING DIAGRAM FOR VIBRAPACKS NOS. VP-555 AND VP-557

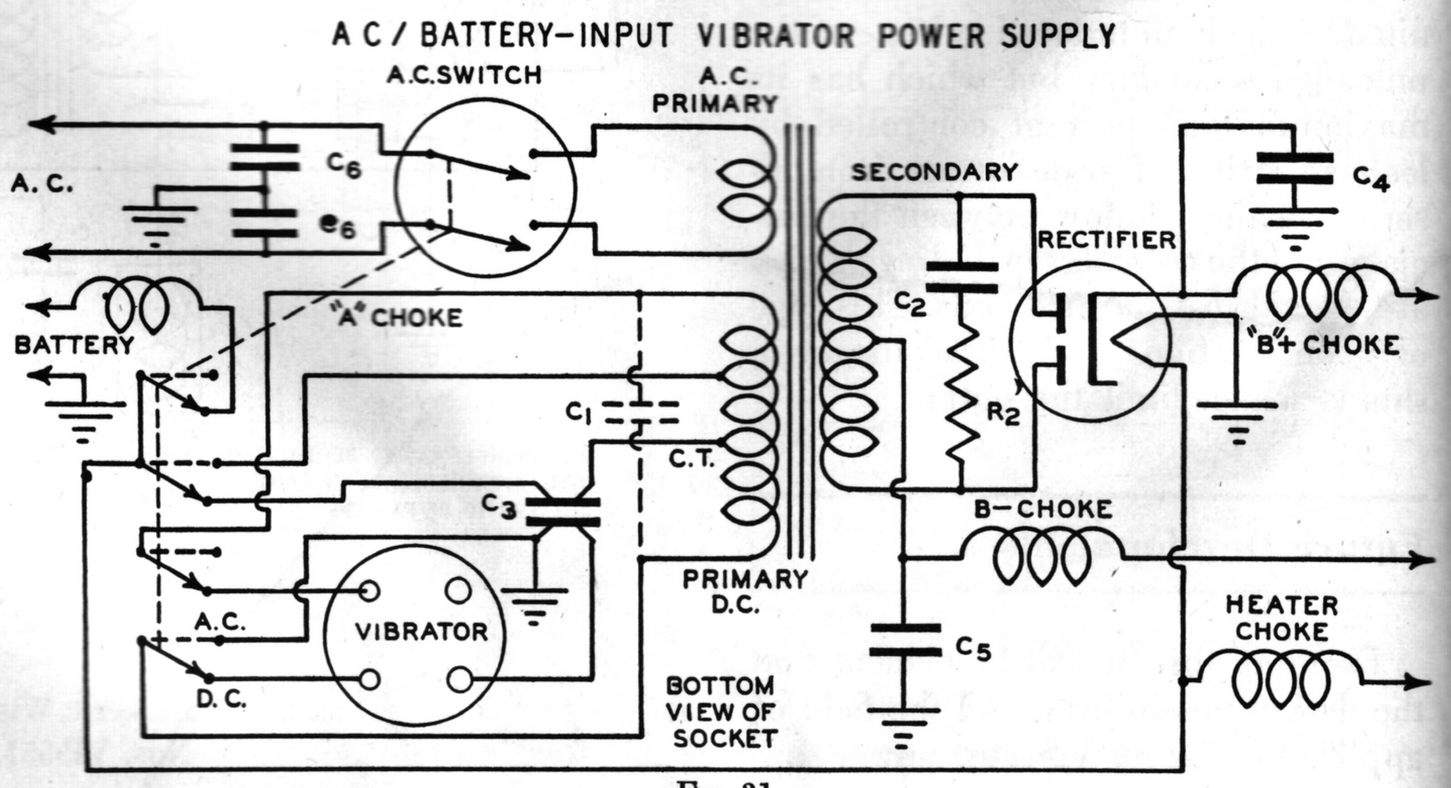

FIG. 31

cuit to provide satisfactory suppression. In general it can be stated that the degree of difficulty in manufacturing a receiver built in any of the above manners is directly proportional to the elimination of shielding in the direction of the steps outlined. Quite a few receivers of the last type mentioned have been produced in large quantities, it is true, but in order to secure satisfactory uniformity after production started, experts devoted many hours of additional labor to "remove the bugs" that could not be foreseen, or if foreseen, the precautions necessary to prevent them arising were considered too much added cost.

CIRCUIT FOR OPERATING VOLTAGE DOUBLER FROM VIBRATOR

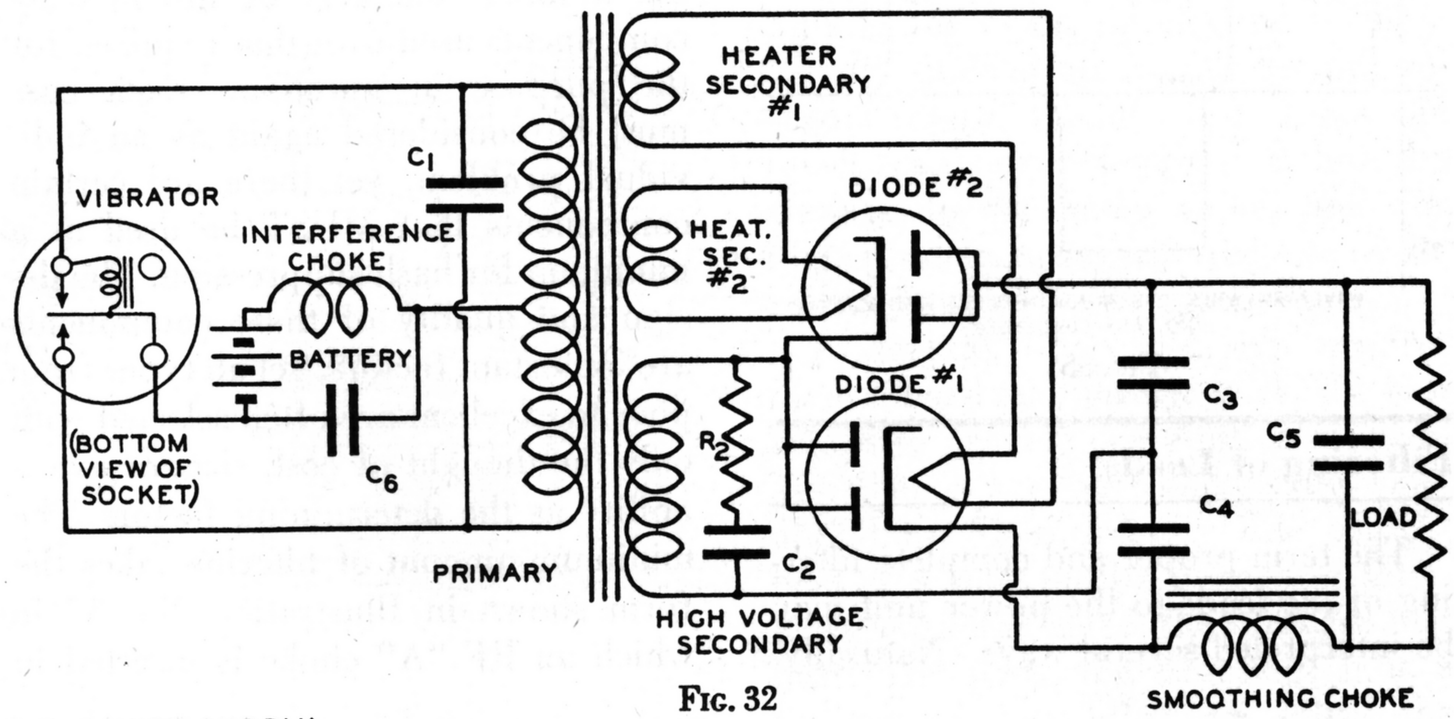

FIG. 32

CIRCUIT FOR UNIVERSAL INPUT POWER SUPPLY USING SPECIAL SELF-RECTIFYING VIBRATOR

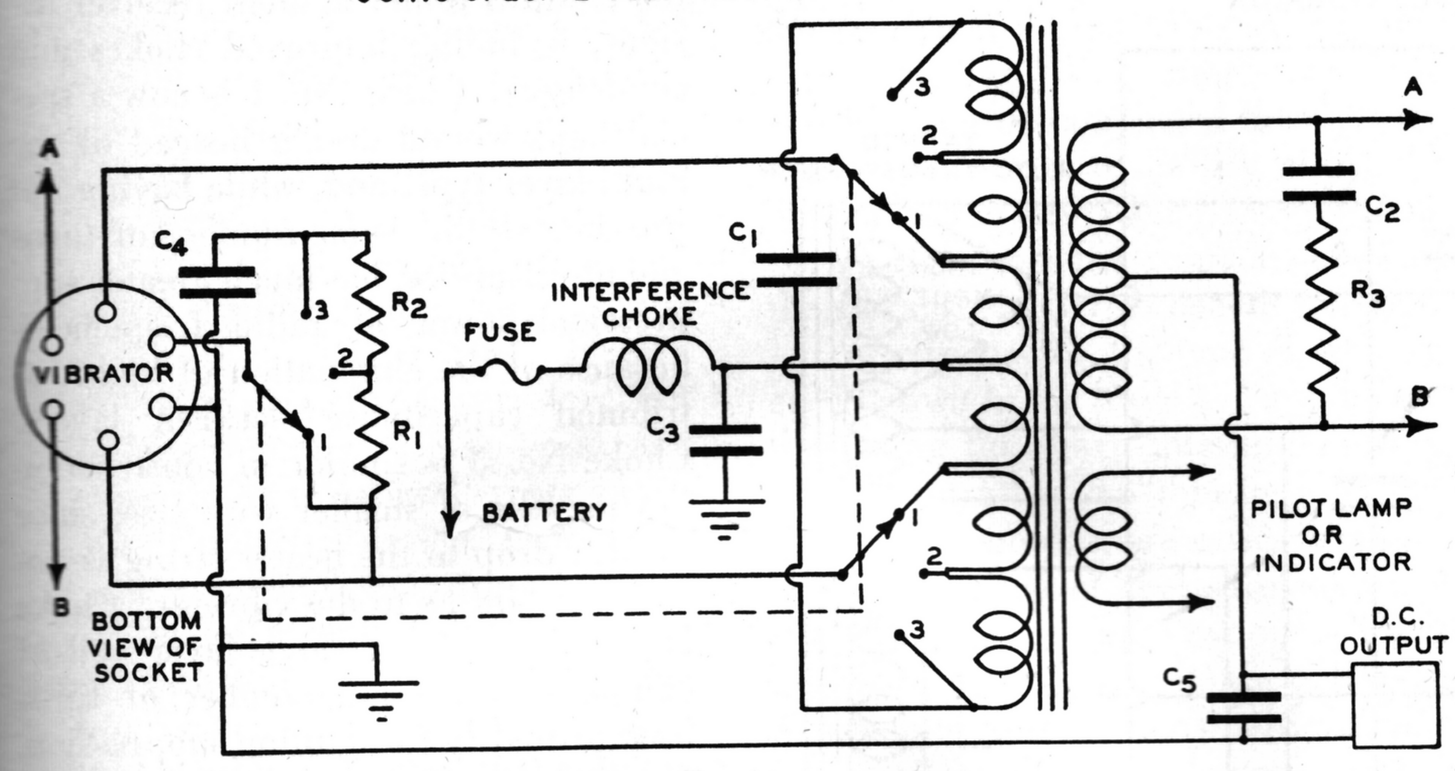

FIG. 33

It is usually desirable to ground the filament, or heater, "string" at one point on the receiver, and to avoid a loop effect formed by the "hot" filament leads and this ground. Often, dividing the flow of filament current from a mid-point on the string will be of assistance in preventing "hash" interference being carried into the high-sensitivity end of the receiver. Selection of a ground on the antenna circuit out of the region of any possible stray field from the power unit is extremely important.

Selection of Grounds

Universal rules for the placement of grounds cannot be given as hard and fast methods, because each design of receiver must be considered as a separate problem. In general, it is wise however, to have just one ground in the power unit, if possible, at least for the "A" or primary circuit components. Another ground for the "B" circuit is often permissible, as the magnitude of the current in this circuit is such that small radiation or ground currents can be expected. If a separate power unit is being used, this should be grounded to the receiver chassis at one point only, selected if possible to prevent a loop being formed by the "hot" "A" lead and the ground, or chassis, and to ground as far from the RF end of the receiver, or antenna coil, as is possible.

TYPICAL CIRCUIT FOR DC/AC INVERTER USING TYPE 90 OR 627 SERIES VIBRATORS

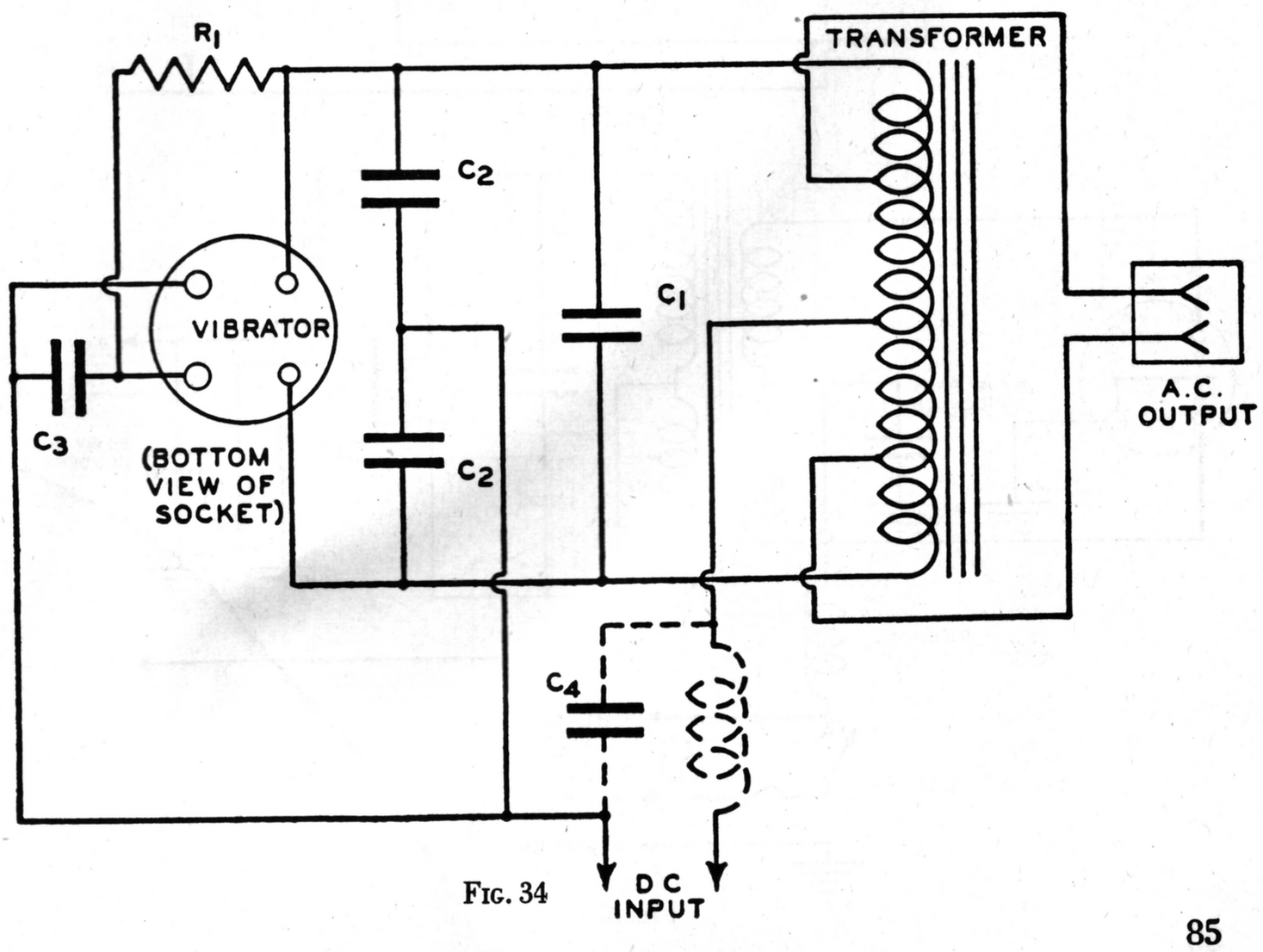

FIG. 34

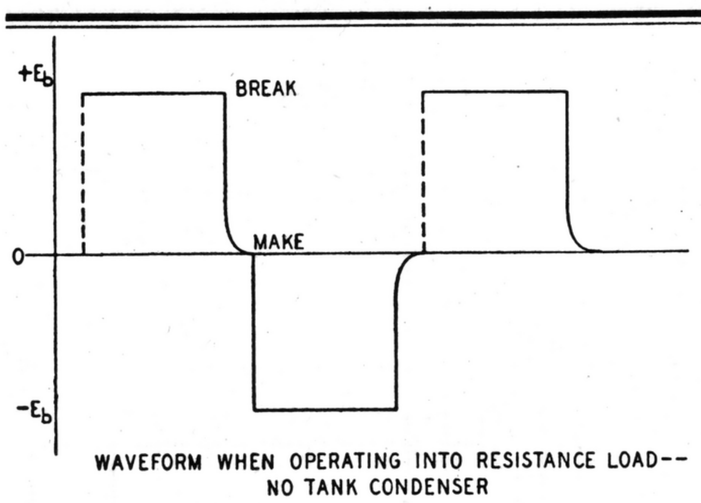

Fig. 35

Filtering of Leads

The term proper and complete filtering of the leads to the power unit may be interpreted several ways. Naturally, there is never an excuse for increasing the number and cost of the filtering components used over that required for the purpose in question. Each case must be considered again as an individual problem, yet there are certain components that MUST be used as a minimum for hash suppression. The design and quality of these components are important factors, yet all types from poor to excellent are often selected with only the thought of cost, size, or availability as the determining factor. The minimum amount of filtering takes the form shown in Illustration No. 37 in which an RF "A" choke is inserted in series with the center-tap lead of the transformer, with a paper by-pass condenser connected from the center-tap to ground, and a second by-pass condenser is connected from the "B" plus high-voltage to ground. On receivers with low sensitivity this may be sufficient, even with low grade components, but as the sensitivity and compactness of the receiver increases, the effectiveness decreases. The choke usually consists of a multi-layer coil of No. 16 or smaller wire, with the "A" by-pass a condenser of 0.5 mfd. The "B" condenser is usually from .01 to .1 mfd.

Compare this circuit with the one shown in Illustration No. 38, which shows an improved form incorporating the features found in latest receiver designs, including improved chokes and condensers. Choke No. 1 is now a special bank-wound design instead of the multi-layer type, and, while having approximately the same number of turns and physical size, has much greater suppression power at radio frequencies because of the elimination of high distributed capacitance between layers. Choke No. 3 is similar in construction but may be of smaller wire size, since voltage drop to the heater string is not as important as to the vibrator. Choke No. 2 is usually a single-layer coil of comparatively small number of turns used primarily for ignition suppression. However, in conjunction with its condenser it also aids in hash suppression. Chokes Nos. 4 and 5 are small RF chokes of small wire for hash suppression in the plate circuit leads, with Choke No. 5 used where B minus is not at ground potential.

Condenser No. 1 is the primary buffer condenser, required on 12-volt or higher input voltages, but which may take the form of an optional mica condenser on some 6 volt or lower applications for hash suppression. No. 2 is the timing capacity, in series with a medium size resistance, as outlined previously, or in the optional arrangements shown as dotted lines. No. 3 is a patented type of hash-suppression RF condenser (Mallory Types RF481, RF482), which definitely eliminates the inductance loops formed by the leads on ordinary condensers. It will be noted that the primary current to the transformer and from the reed of the vibrator must flow directly across the plates of the condenser, this being the best possible

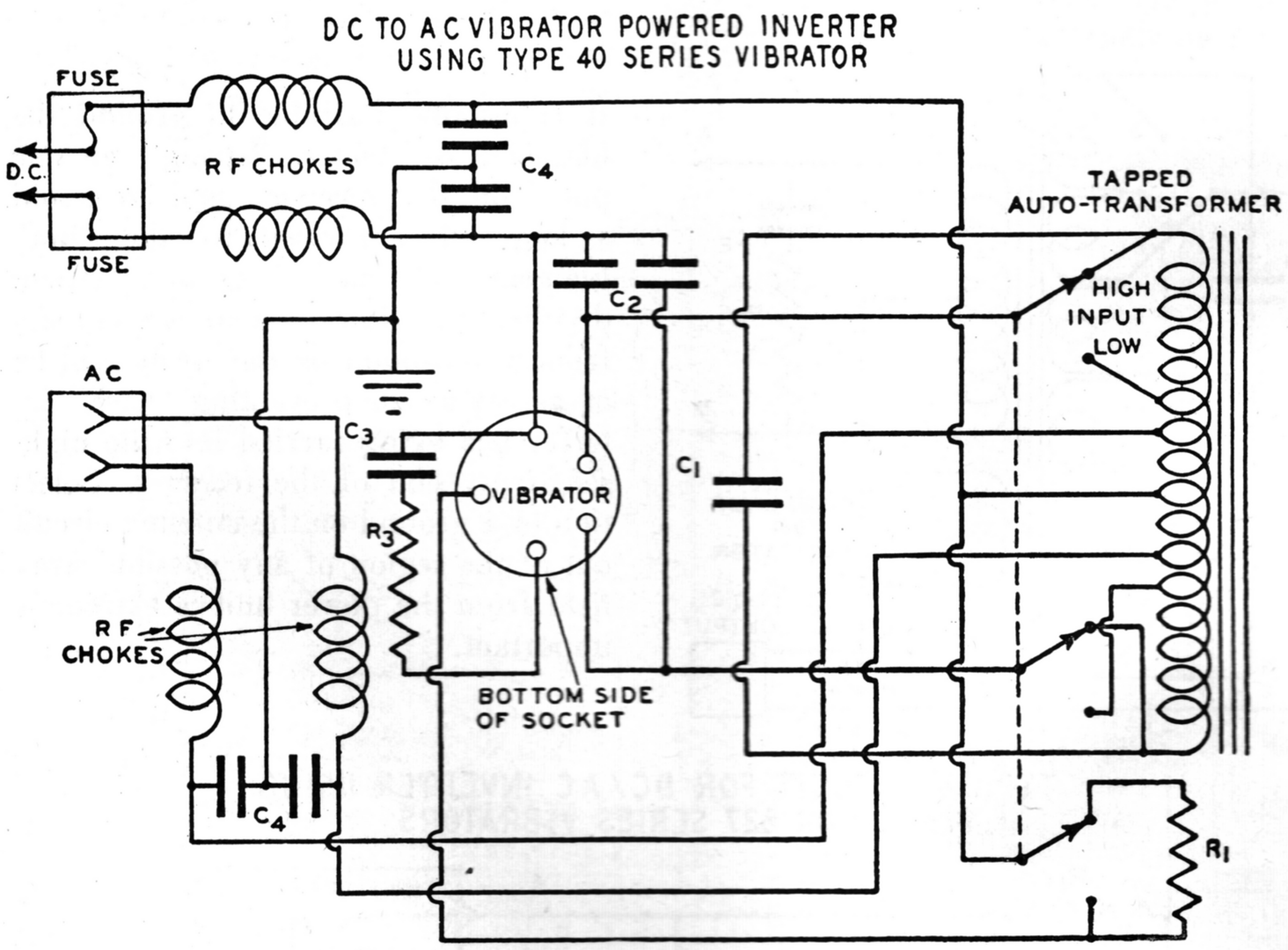

Fig. 36

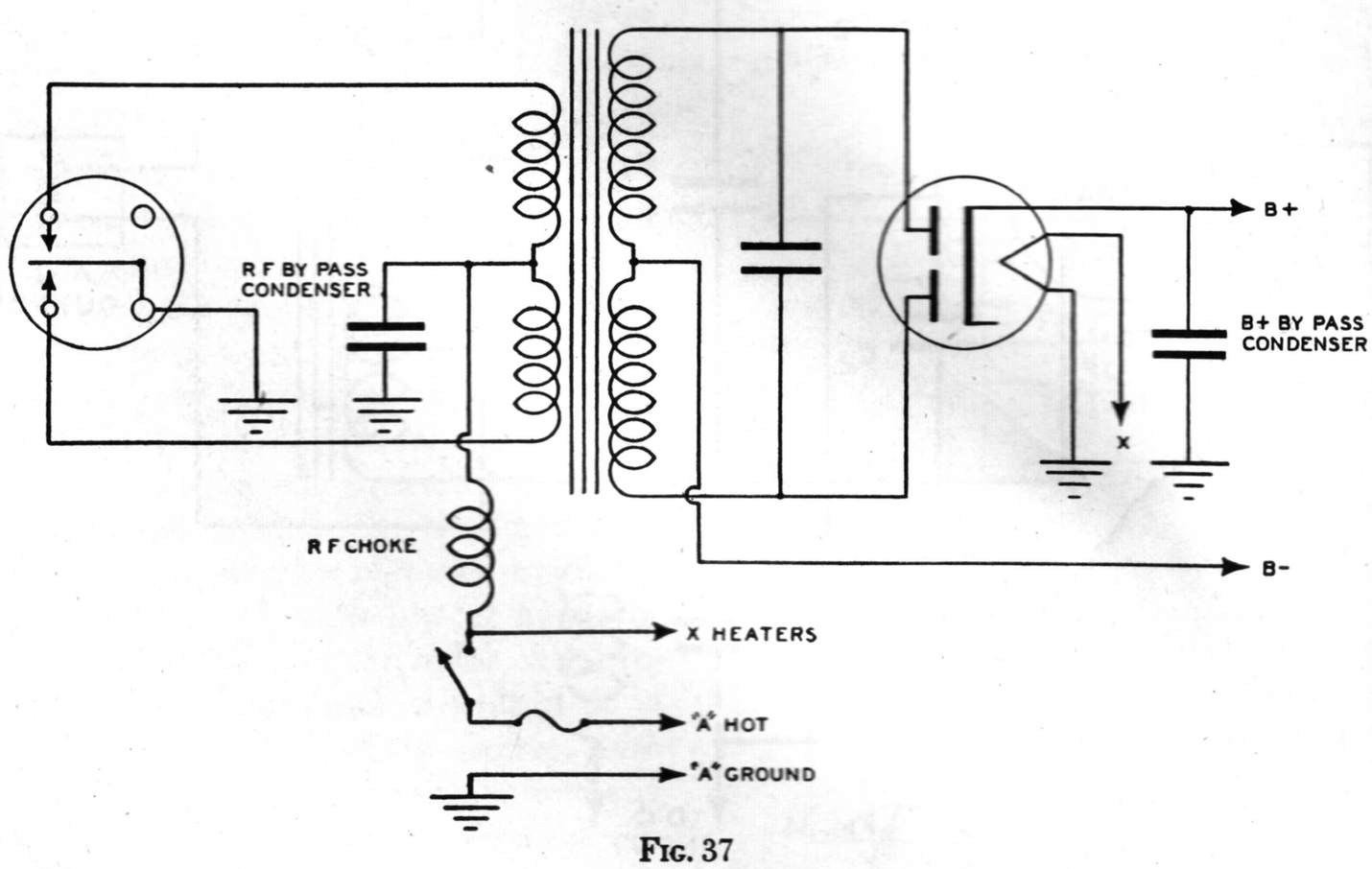

Fig. 37

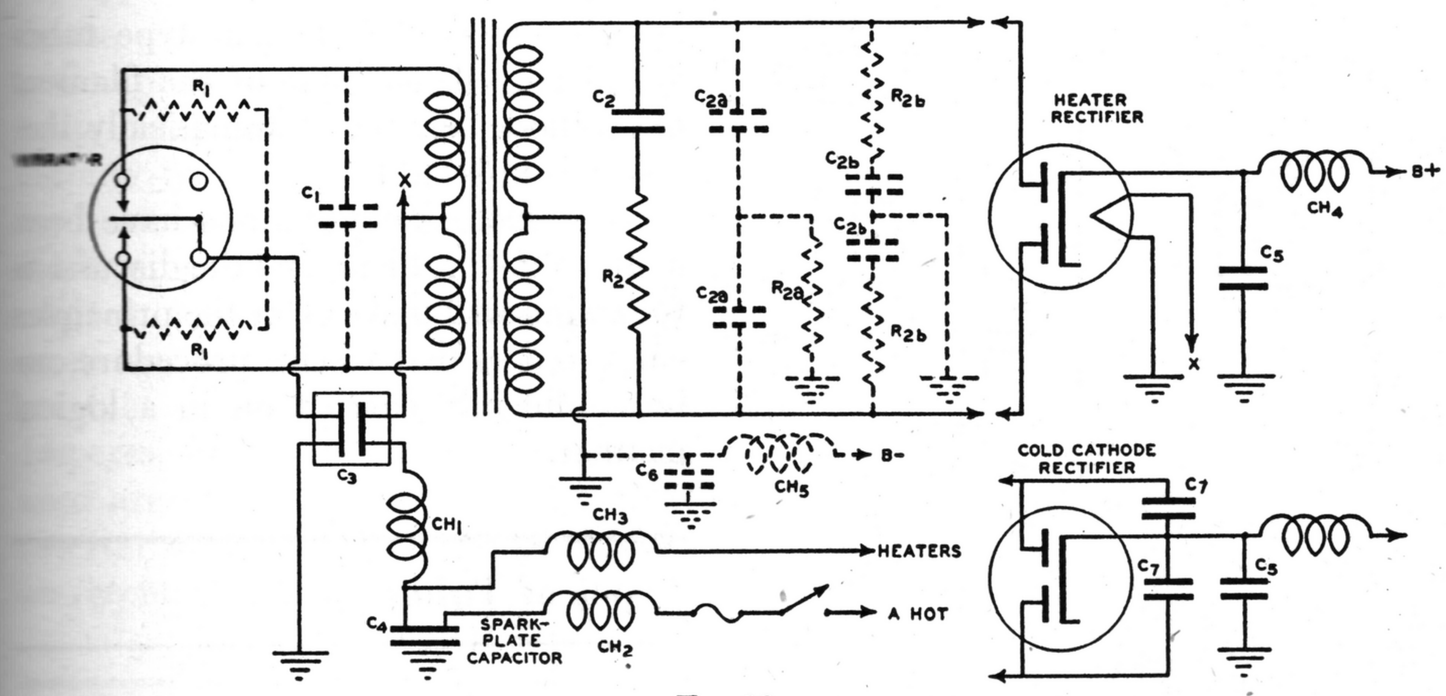

FIG. 38

means of securing a short-circuited path for the RF currents. The vibrator reed is grounded after the condenser in this method, as shown. No. 4 is a special type of condenser developed recently, and known in the trade as a "spark-plate," since its first application was for the use of eliminatng ignition interference without reducing signal strength, etc., in the antenna circuit. Naturally its capacity is very low, but the lack of inductance in its leads, and close proximity to ground create an excellent RF filtering device. Originally, this condenser took the form of one or more plates of metal separated by fish-paper insulation and riveted to the chassis. The current was fed in one end and out the opposite end of the plates, in the same manner as No. 3, thus eliminating the inductive effects. No. 4 has taken the form of a small mica insulated condenser which is soldered, rivetted, or screwed to the chassis, and has been found to give excellent results in difficult cases of hash elimination. No. 5 and No. 6 are ordinary RF by-pass condensers, but may be of paper or mica construction as the case demands. Ordinarily, little difficulty arises from interference arising in the "B" circuit, because subsequent filtering in various parts of the receiver is usually sufficient to minimize this source of difficulty. As pointed out previously, where a cold-cathode rectifier tube is used, No. 7 condensers may be required if sufficient filtering is not provided in the "B" circuit.

Two additional pointers are shown, which may be of service in hash elimination. It is usually desirable to connect the "hot" rectifier heater terminal to the center-tap of the transformer rather than to the heater string, unless this involves carrying a long lead into the receiver proper. The rectifier tube is always "hot" with interference and enough may be conducted through the heater connection to nullify all of the other filtering provided. The use of resistors R_1 across the contact points of the vibrators has great benefit in reducing, or eliminating, the type of interference known in the trade as "pop hash," that being the sharp intermittent variety, in contrast to the "tone hash" which is the continuous, more or less regular, type. The value of these resistors will vary in different applications. Where input current is not so important, as in automobile receivers, or where chargers are available for the battery, values from 50 to 200 ohms have been used, with probably 100 ohms being average. This is for 6-volt applications; where 12-volt applications would require resistors, approximately four times the 6-volt resistance is required to limit the wattage to the same value, and for higher voltages, the required size of the resistance removes its effectiveness.

In general, where a design requires intense hash elimination work, the best rule is to provide every bit of suppression that is available and secure quiet operation. Then, remove one component at a time until a change in interference level is noted, then replace that particular part, and proceed. It is a practical impossibility to judge the value of a single component by inserting it alone when the interference may be arising from a number of omissions, or locations. Care should be taken that the resistance of the vibrator "A" circuit be kept as low as possible, in order to secure good starting, good efficiency, and regulation. Added capacitors are to be preferred rather than added chokes.

Long-wavelength (low-frequency) bands in communication or "all-wave" receivers are usually the most troublesome to completely cure of hash interference. Here additional chokes and high capacities are usually required along with the other suggestions given above.

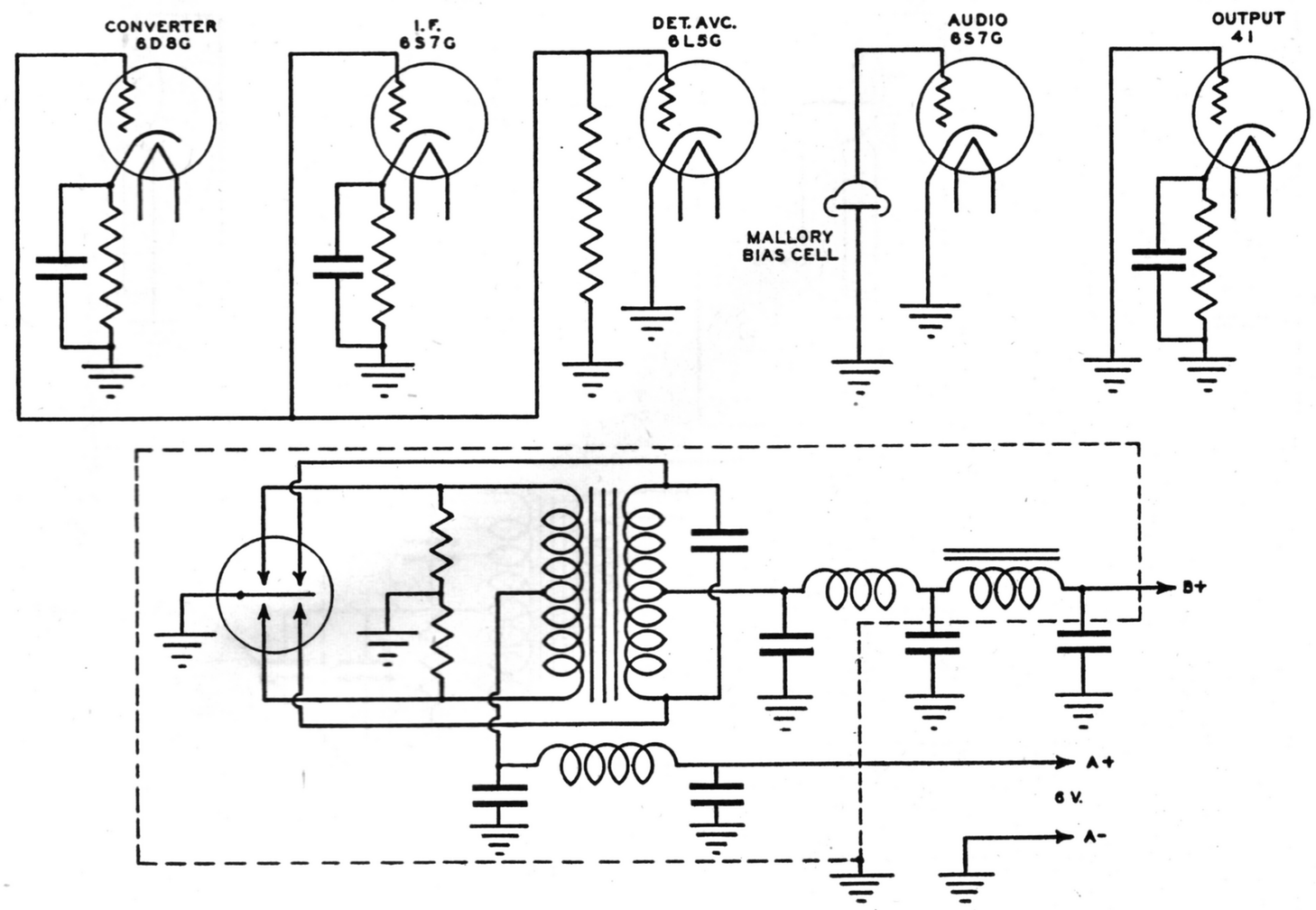

FIG. 39

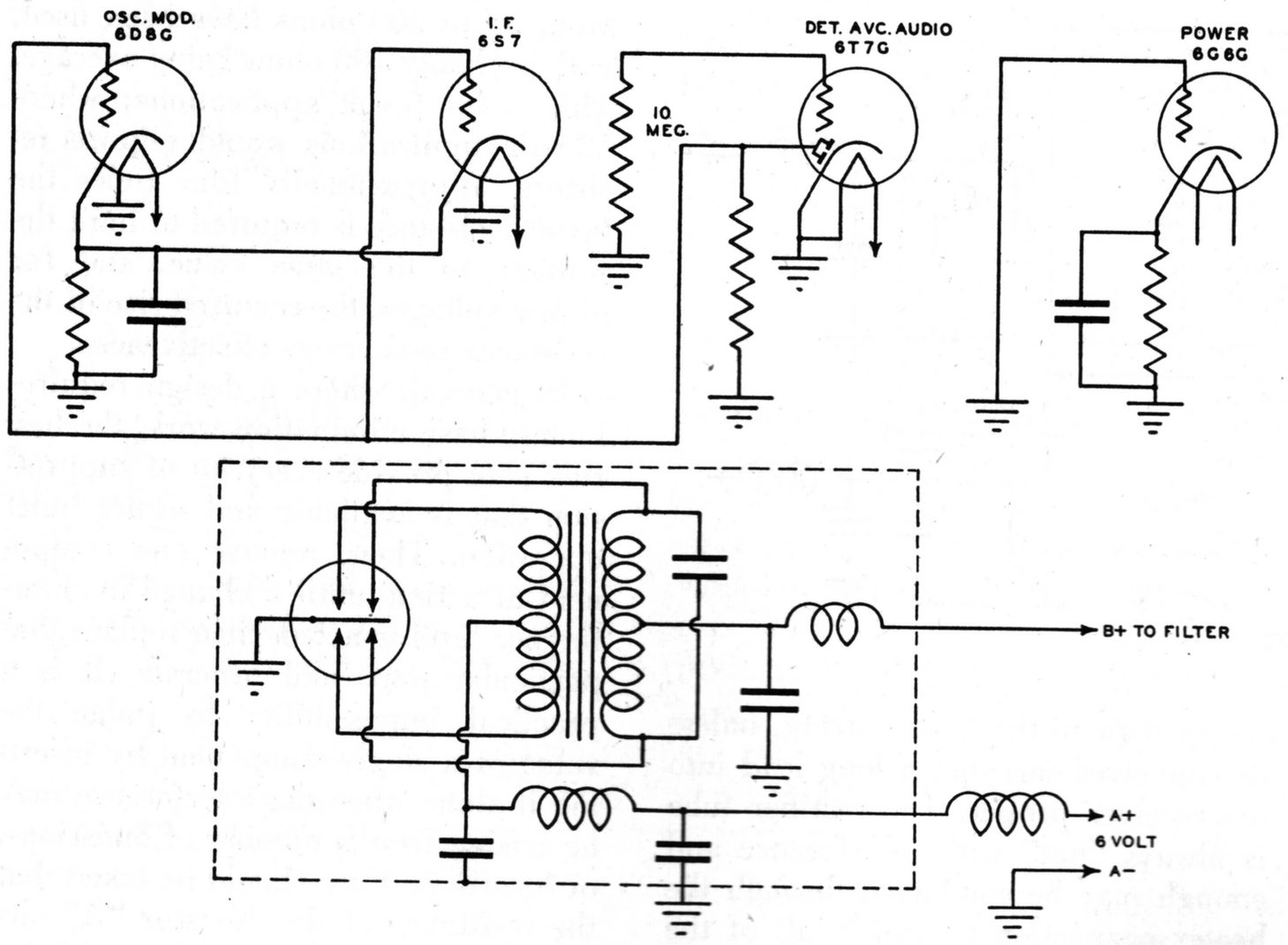

FIG. 40

Bias Supply Systems

Offhand it may seem a bit unusual that a treatise on Vibrators and Vibrator Power Supplies would treat grid biasing methods of radio receivers. However the widespread usage of the deservedly popular synchronous or self-rectifying vibrators has led to the adoption of new biasing methods, necessary in vibrator power supplies employing synchronous vibrators because B— must be at ground potential, and consequently bias resistors cannot be inserted in the high-voltage negative lead of the power supply system. When heater type tubes are employed, conventional cathode resistors will provide bias; but when for reasons of current economy in farm and portable receivers filament type tubes are employed, one side of the filament or cathode circuit automatically becomes connected to B—.

Very successful solutions have been made to the problem, and the discussion following will make clear the principles employed so that service procedure can be confidently carried on in a logical manner.

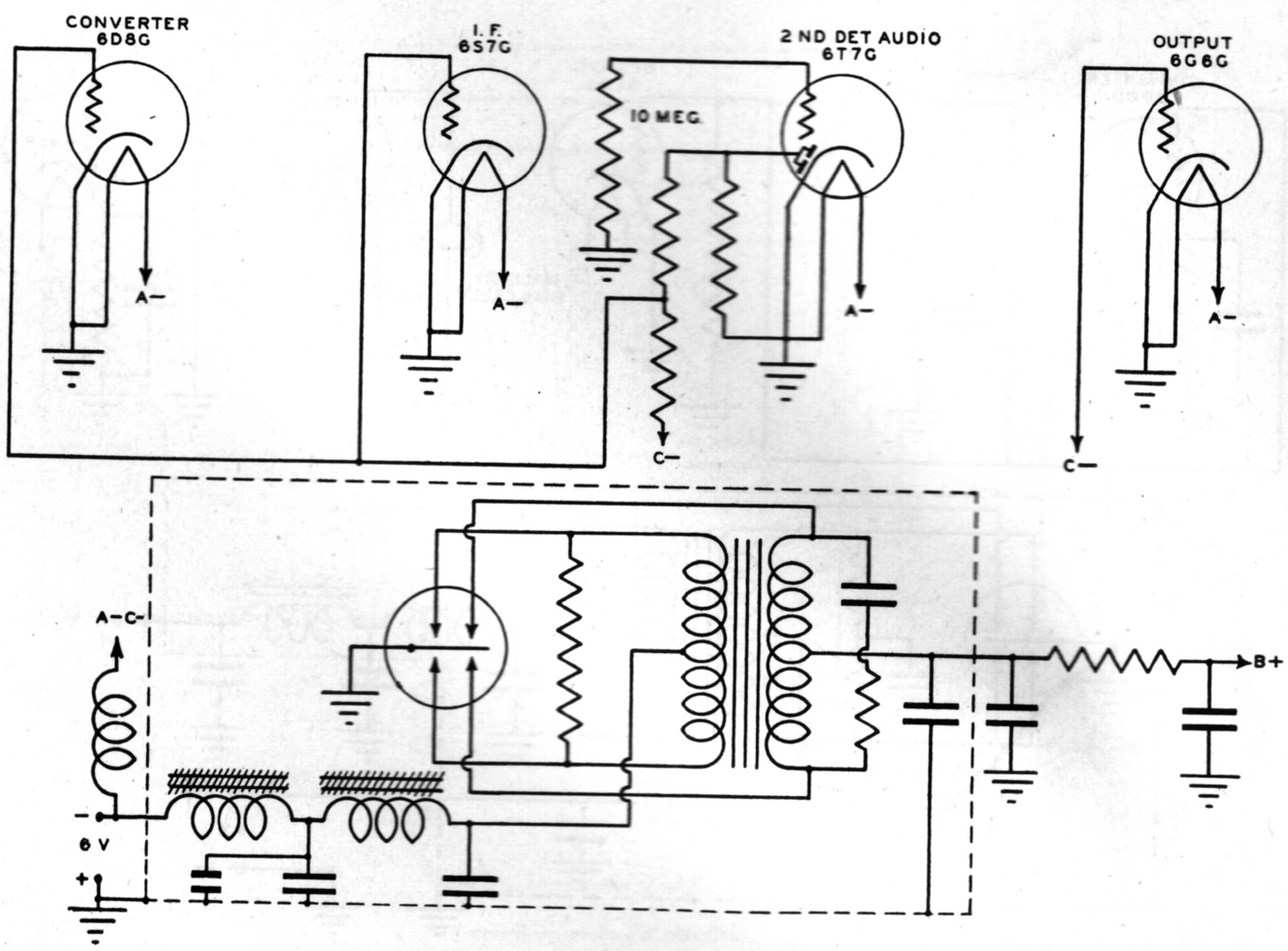

FIG. 41

Types of Tubes

In using vibrator operated power-supplies to furnish plate voltage for portable and battery-operated radio receivers for farm homes, or for places where no AC power is available, current consumption must be held to a minimum to secure good life from the batteries. Tube manufacturers have developed a considerable number of special types of tubes for this class of service with the general characteristic of low filament or heater power, and comparatively low plate and screen power requirements. The cathodes of these tubes are both indirectly and directly heated in various tubes, being either the common "heater" construction or filament types. Filament voltages are 1.4 and 2.0 volts, and heaters are 6.3 volt types. Quite often these types of tubes are mixed in a receiver for various reasons to obtain special results.

Where the same cells of the battery supply both the vibrator and the filaments of the tubes, it is usually necessary to isolate the filament "string," or circuit, from the effects upon the battery of the hum "ripple" voltage impressed upon it by the vibrator pulsations, as illustrated at a later point. This is usually done by placing an iron-core choke of low resistance (similar to the voice-coil winding of an output transformer), in the power lead to the filament supply. This must not be in the vibrator circuit. Quite often it is also necessary to connect from the filament side of this choke a high-capacity, low-voltage electrolytic condenser, of at least 1000 mfd., to ground or to the other side of the filament circuit. This filtering is usually not necessary if all the tubes are of the heater-type unless the system has unusually high gain, in which case it may be that the first tubes

in the amplifier will require isolation.

Complements of tubes used in typical radio receivers for this class of service include types requiring: 6.3 volts for the heater at currents of 0.40, 0.30, and 0.150 amperes; 2.0 volts for the filament at currents of 0.120 and 0.060 amperes, and 1.40 volts for the filament at currents of 0.100 and 0.050 amperes. The maximum plate voltages used are under 200 volts on the older receiver designs, and as low as 60 volts on recent portable units.

Circuit Diagrams

Shown in Illustrations Nos. 39-48, are simplified circuit diagrams of the tube complements, vibrator power-units, filament or heater circuits, and bias circuit connections for ten production models of battery-powered home radio receivers that have been produced in recent years. These diagrams offer a wide variety of combinations of tubes and biasing methods that permit the satisfactory operation of these receivers with a "solid-reed," self-rectifying, vibrator power-supply in which the "B minus" connection must be at supply-battery potential.

All Heater Type Tubes

The circuit shown under Fig. 39 illustrates a receiver equipped with all 6.3 volt, heater-type tubes of various heater-current requirements. The Vibrator power-supply is conventionally built into a separate unit consisting of a sheet-metal box grounded to the radio chassis at one point. A separate Type 6L5G tube is used for Second-Detector and AVC supply and a Type 6S7G tube is used in addition for the 1st-Audio Amplifier tube. All of the heaters are connected, of course, directly across the 6-volt battery. Bias voltages (negative) for the control grids are secured for the converter, IF-amplifier, and power-output tubes by self-biasing resistors in the cathode circuits. The first audio tube is biased by means of a Mallory Bias Cell, which is a primary battery type of unit with extremely high internal resistance, which generates approximately 1 volt on open circuit. It is interesting to note here that a drain of only several micro-amperes will reduce the voltage read across the terminals of the cell, and thus a vacuum-tube type of voltmeter is required to accurately measure the cell. However, in the grid-circuits of radio receivers, no current drain is required, and an AC current passing through the cell does no damage to it, perhaps charging it to a slightly higher voltage. A short-circuit to the cell for a short period does not damage it either, and the voltage will rise to the original value as the cell recovers. However, it is not recommended for use as bias for the output stage, inasmuch as continuous (DC) grid-current flow will change the cell's characteristics to too great a degree for satisfactory performance. To conclude, the second-detector tube, being a diode, does not require grid bias. In most respects, this design of receiver is similar to most automobile receivers in which vibrators have been used for many years.

The circuit in Fig. 40 is quite similar to that of Fig. 39, with two major changes. The two tubes used for second-detector, AVC, and 1st-audio in Fig. 39 are now combined into one tube,

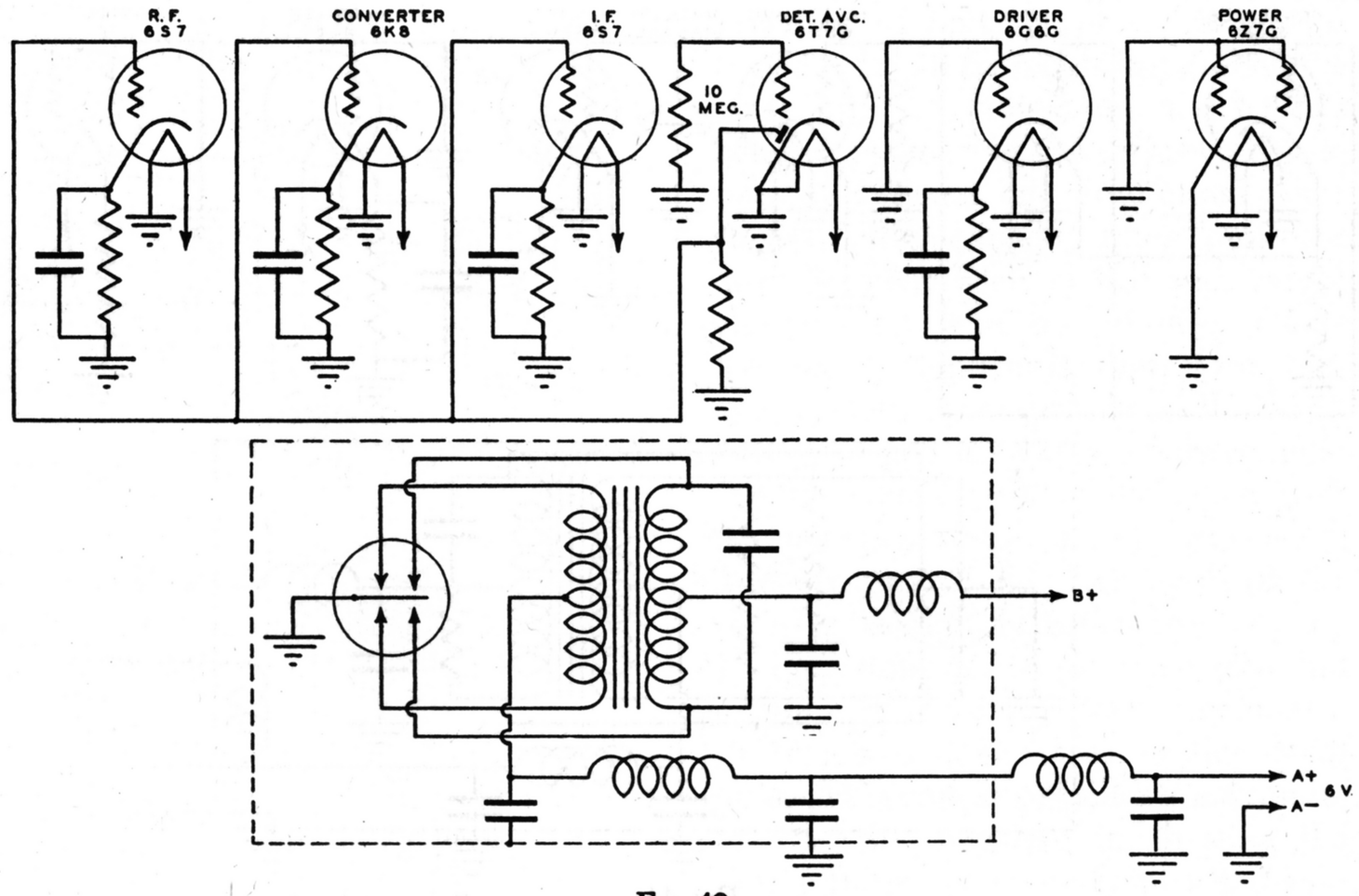

Fig. 42

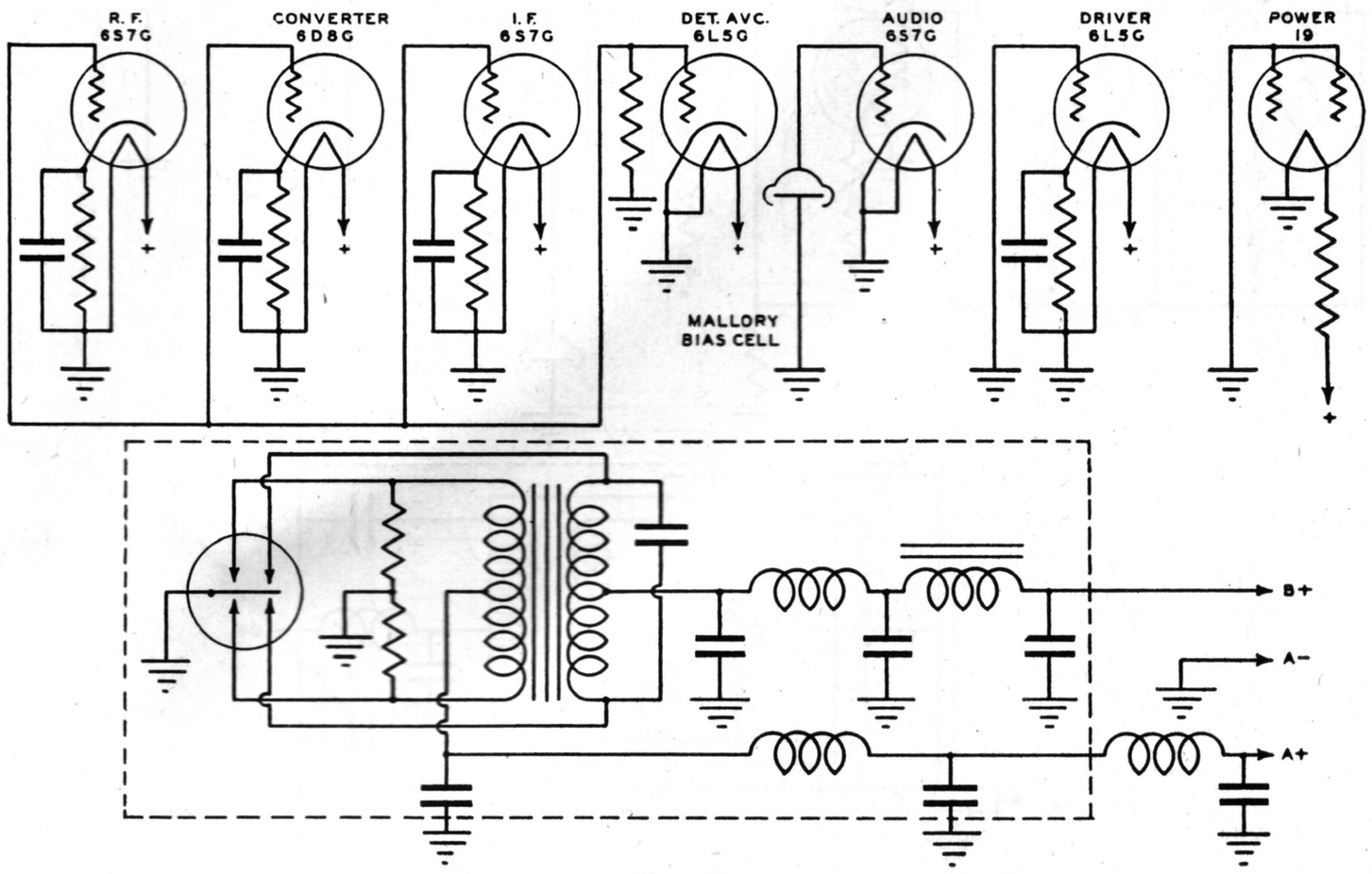

Fig. 43

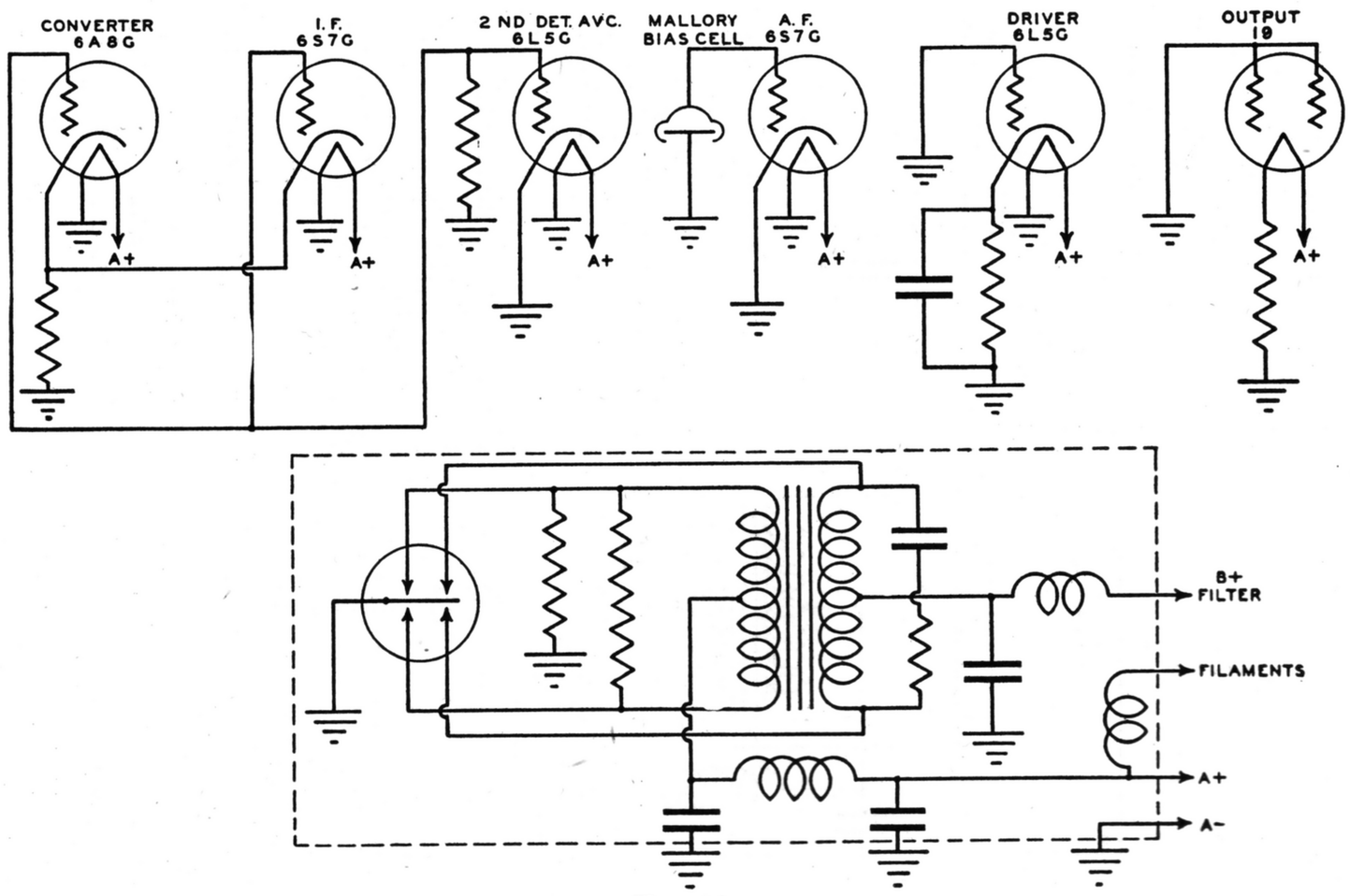

FIG. 44

the Type 6T7G, and the negative grid-bias supplied by the Mallory Bias Cell for the 1st-audio tube is now omitted, this circuit now being controlled by a 10 megohm resistance.

The circuit shown in Fig. 41 is a further variation of Fig. 40, in the manner of securing fixed bias for the tubes other than the 1st-audio tube. The cathodes of these tubes are now grounded, as is the positive side of the 6-volt battery. The output-tube control grid connects to the negative of the battery for a bias of minus 6 volts. The converter and IF-amplifier tubes connect to the same point through a voltage-divider to secure the desired bias, and the diode of the AVC circuit also receives a certain negative bias from the same source. Iron-core "A" circuit chokes are shown in the power-unit, but it should be pointed out that these are of the high-frequency powdered-iron type, of comparatively low inductance. The iron permits the use of fewer turns of wire, making for a smaller choke with lower primary-voltage drop.

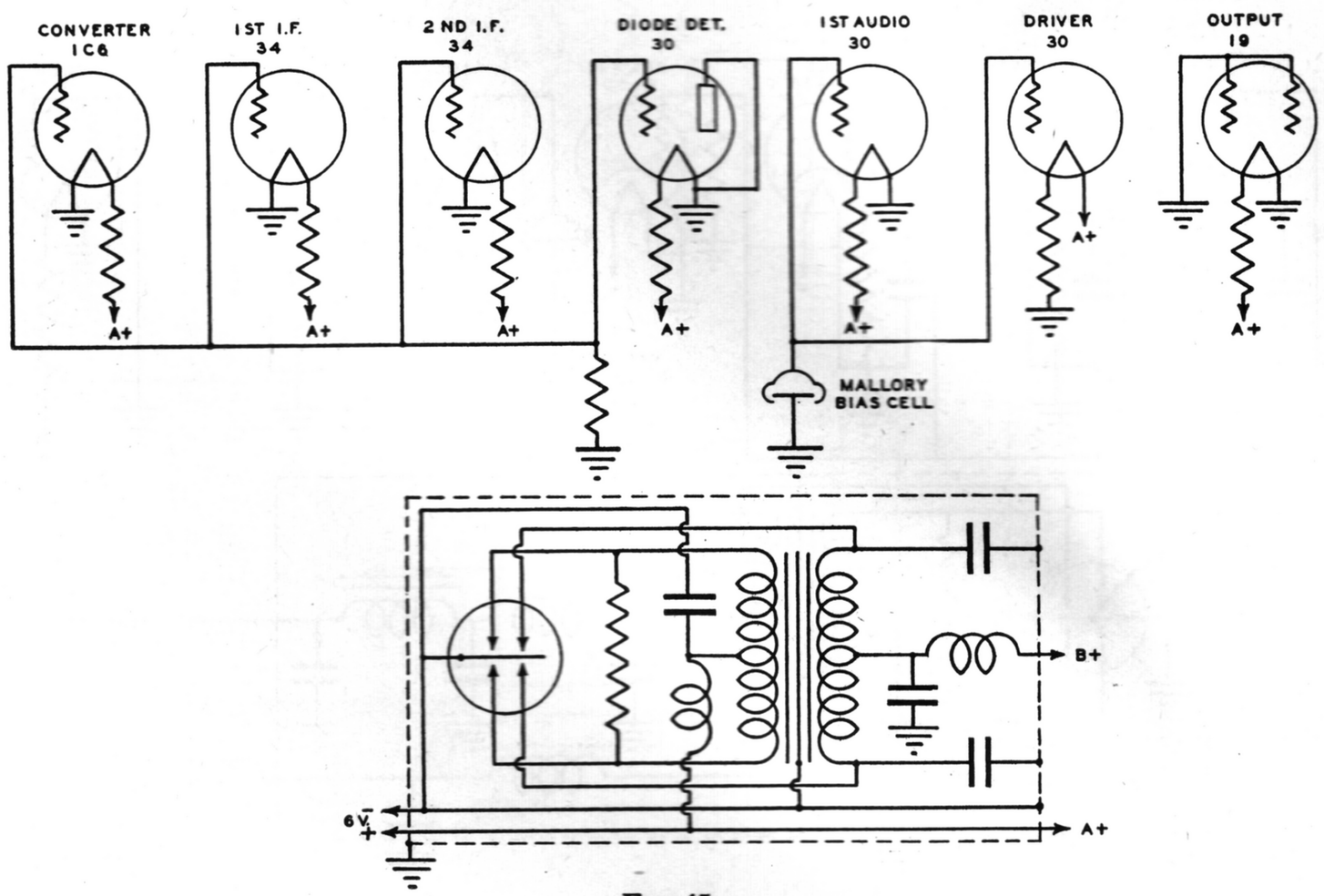

FIG. 45

Fig. 42 also shows a receiver with all heater-type tubes, but with a zero-bias, "Class-B" dual output tube substituted for the previously shown biased-type tube. This tube requires a driver tube preceding it to secure the maximum power-output which it is capable of delivering. The other tubes are biased as in Fig. 40.

Heater and Filament Type Tubes in Combination

In the circuits shown in Fig. 43 and Fig. 44 it will be observed that a combination of heater-type amplifier tubes and filament-type power-output tube has been adopted, the latter being the Type 19, a "Class B," dual output tube. The Mallory Grid-Bias Cell is again used for negative-bias on the 1st-audio tube control-grid in each circuit. The difference between the two circuits is that in Fig. 43 the output tube operates at zero grid-bias (inasmuch as the filament dropping resistor is on the positive side of filament), while in Fig. 44 the output tube operates with 4 volts negative bias (because the filament dropping resistor is now in the negative side of the filament, raising the filament 4 volts positive above ground with the control-grids connected to ground). The Type 19 is primarily intended for zero-bias operation; therefore, the use of the negative 4-volts bias in Fig. 44 is for the purpose of further reducing the "no signal" plate current. In each circuit it is again necessary to provide a driver tube preceding the power-output tube to provide sufficient energy to attain full audio power.

Fig. 45 circuit diagram shows a combination of one 1.4-volt and six 2.0-volt filament type tubes operated from a 6-volt battery. This circuit shows the simplest method of using this type of tube, with each having its own filament dropping resistor, but it should be pointed out that the maximum conservation of battery current is not attained to any degree with this system, in contrast to the possible series-parallel combinations which could be made. No hum-filtering for the filaments has been provided other than the dropping resistances. In the biasing of these tubes

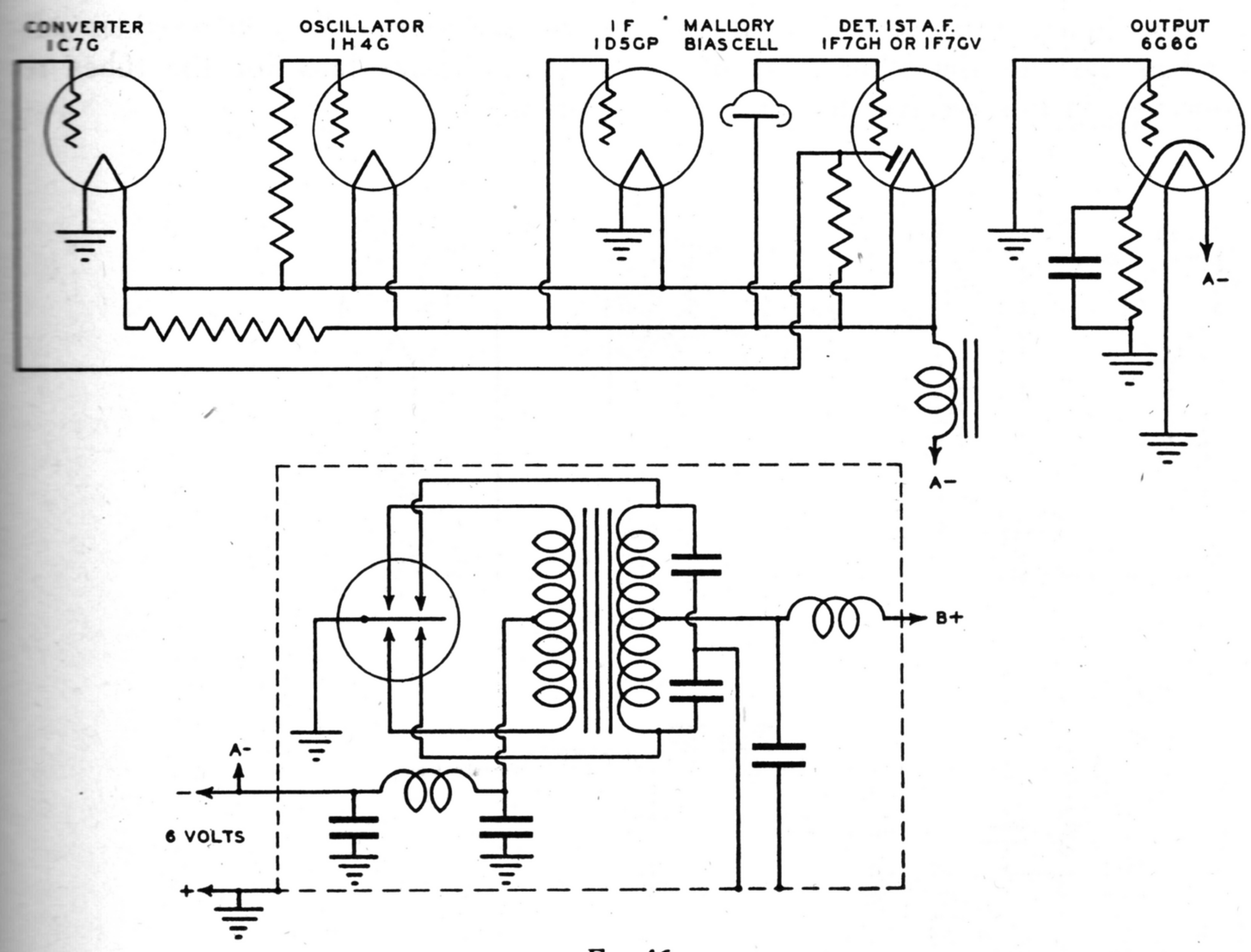

Fig. 46

you will note a similarity to some of the preceding diagrams. The power-output tube is operated at zero-bias, again being the type 19. The Mallory Bias Cell is again used for negatively biasing the 1st-audio tube control-grid, but in addition adds one volt to the bias of the driver tube control-grid, which receives in addition 4 volts negative from the fact that the filament dropping resistor for this tube is on the negative side of the filament.

The circuit shown in Fig. 46 is decidedly different from the others shown, in that a combination of filament-type amplifier tubes and a heater-type power-output tube is used, and in that a series-parallel filament circuit is used to conserve battery current and secure bias. The oscillator and second-detector tubes are in parallel, as are the converter and IF-amplifier tubes, with the two groups in series. An equalizing resistor is placed in parallel with the first group to secure equal current and voltage distribution. The remaining 2 volts of battery is dropped in the filament iron-cored choke used for hum-elimination, as shown. The converter and IF-amplifier tubes receive control-grid negative bias by returning the grids to the filament choke, thus securing negative 2 volts bias. A Mallory Bias Cell is used for the 1st-audio control-grid, while self-bias is used for the heater-type output-tube.

All Filament Type Tubes

The circuit of Fig. 47 shows a tube complement of all 1.4 volt filament type tubes, with push-pull triode power-output tubes. Here again the full conservation of battery current is not attained, with all filaments in parallel, the remaining 4.6 volts from the battery being consumed in the series combination of resistor and iron-cored filter choke. A high-capacity filter-condenser has also been used in this receiver in combination with the filament choke for better hum-elimination. Two voltage dividers are placed across the 6-volt battery to provide various bias voltages for the control-grids of the tubes, with the positive of the battery grounded. The divider for the "RF" end of the receiver is high in resistance, totaling 11 megohms, while for the audio end of the receiver the divider is comparatively low in resistance, totaling 6000 ohms. This system provides a maximum of 4.5 volts negative for biasing the output tubes below the filaments. Again a driver tube is required preceding the output tubes.

The final circuit shown in Fig. 48 is considerably different from the others, and in many respects is the best from a power-supply standpoint. One cell of the 3-cell, 6-volt storage battery is used exclusively for heating the filaments of the tubes. The other two cells of the battery are used exclusively for operating a 4-volt vibrator power-unit. This isolates the filament circuits from the pulsations impressed upon the battery by the vibrator, and, by grounding the negative side of the filament circuit, permits the 4 volts of the battery used

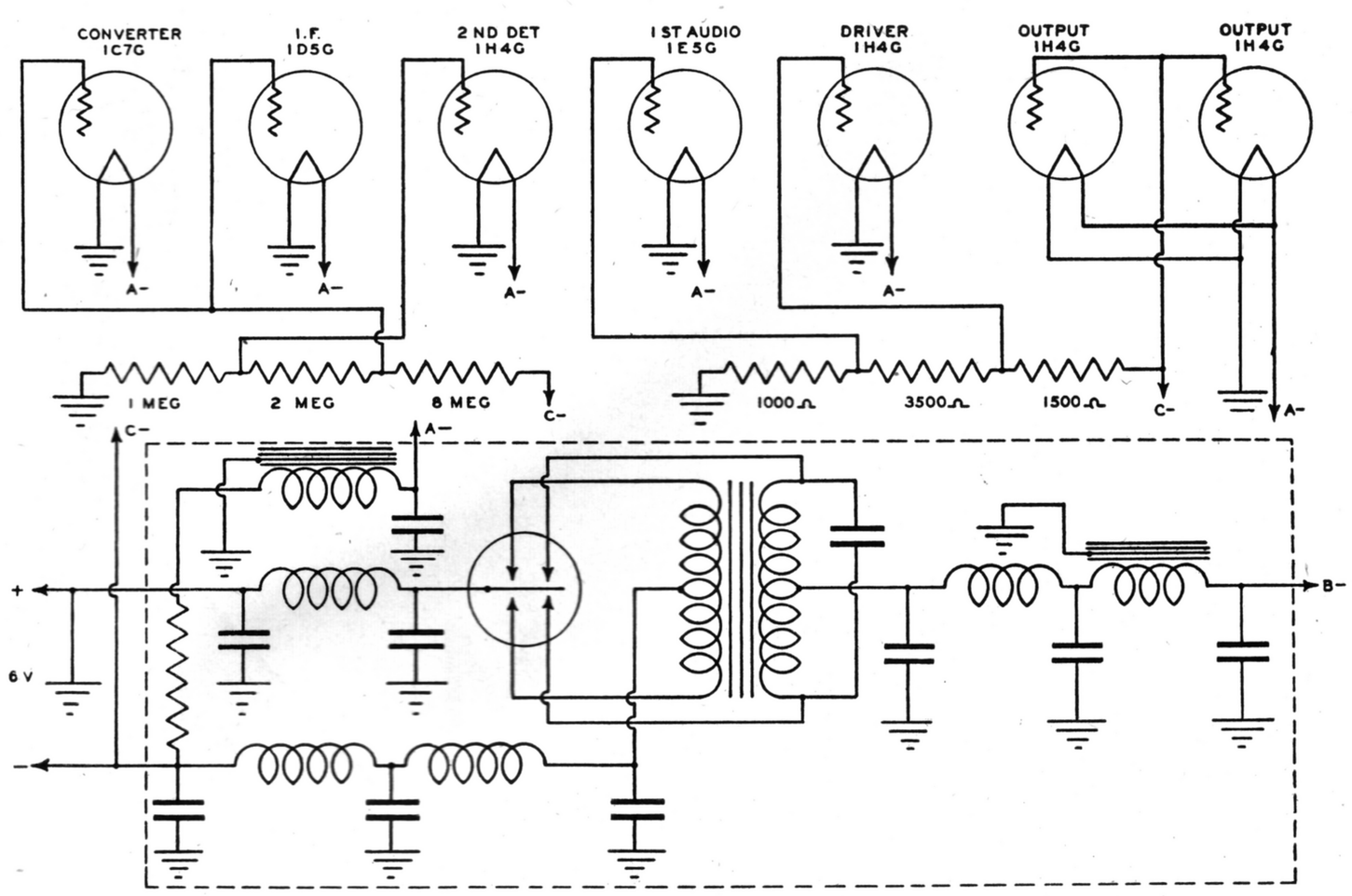

Fig. 47

for vibrator power to be used for biasing the control-grid of the output tube. By filtering this voltage through a resistor-capacitor network, it could be used as bias for the other tubes also. However, in this receiver the use of a single Mallory Bias Cell provides sufficient negative bias for the tubes requiring it.

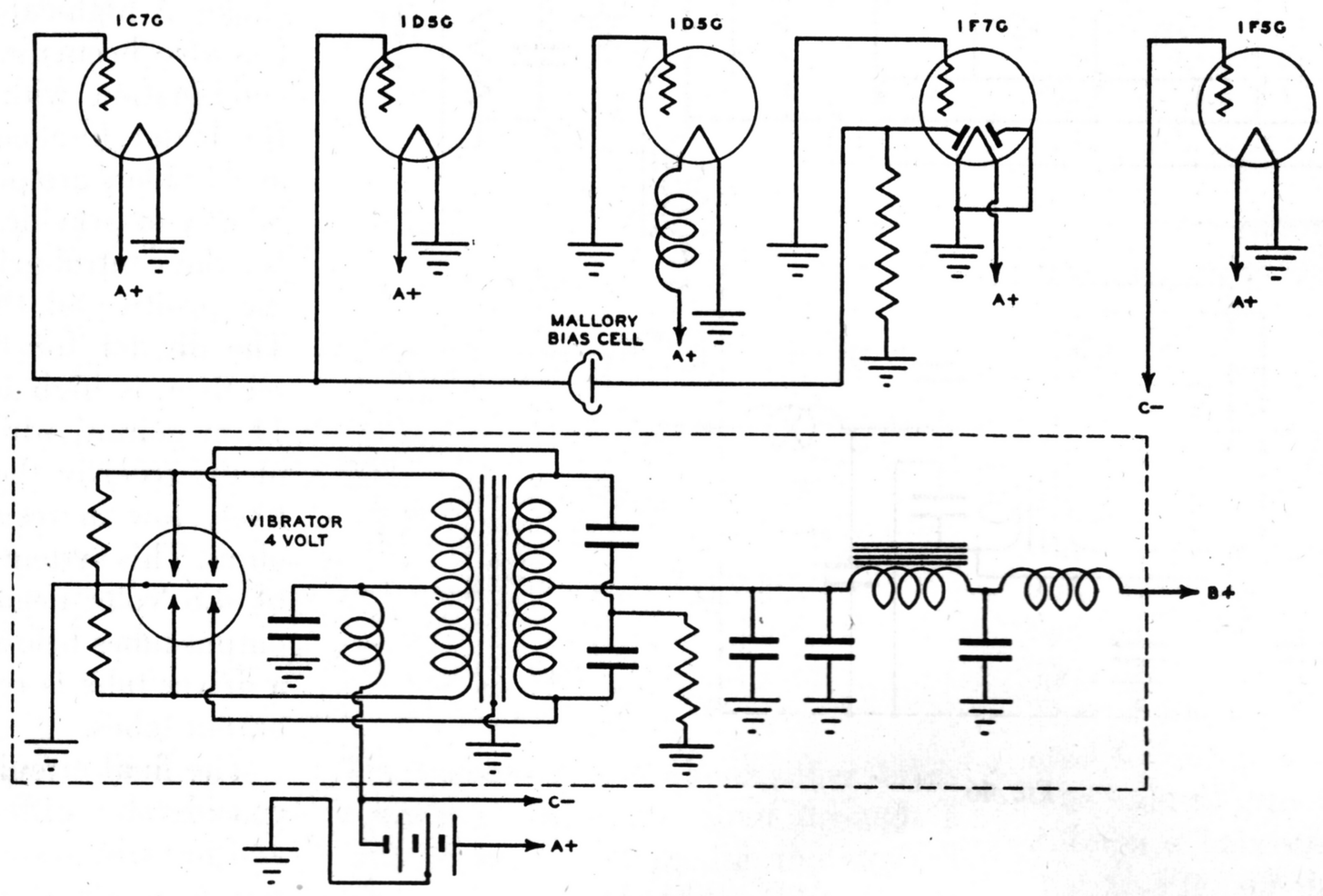

FIG. 48

Features of vibrators illustrated and described in the preceding section are covered by U. S. Patents 2,187,950, 2,190,685, 2,197,607 et al. of P. R. Mallory & Co., Inc.

• *Section* 5

THE MYE TECHNICAL MANUAL

Phono-Radio Service Data

P.R. MALLORY & CO., Inc.
MALLORY

PHONO-RADIO SERVICE DATA

Crystal Pickup Installation

A large portion of present day phono-radio combinations (either built as a single unit or radio receivers converted by the use of record playing apparatus) employ crystal pickups. Since the pickup medium is actually the heart of the reproduction system, the first logical step is to become familiar with the characteristics, operation, and care of these units. The following discussion illustrates these points.

If you are called upon to select and install a crystal pickup for record reproduction you have available a considerable choice of styles, types and prices. The final quality of reproduction, however, depends not only on the pickup itself but also on the method of installation. The response of the very finest crystal pickup can be ruined by failure to observe a few basic, simple installation precautions. Actually, proper installation is a simple matter, and by following the suggestions in this article, you should obtain the really fine reproduction for which quality crystal pickups are noted.

Electrically the crystal is the equivalent of a condenser with a capacity of about 1,500 mmfd. The impedance of the device, therefore, is quite high (100,000 ohms at 1,000 cycles and 1 meg at 100 cycles) and the *lower* the frequency, the *higher* the impedance. Instead of a power generator, the crystal pickup may be thought of as a voltage generator which requires a very high-impedance load so that the greater part of the generator voltage, at all frequencies of interest, will appear across the load.

Terminal Impedance

Since the impedance of the pickup is highest at low frequencies, it is evident that the choice of load resistance will directly govern the low frequency response. This effect of terminal impedance on low frequency response holds regardless of any other considerations. It is inherent in the use of the crystal with its capacitive internal impedance. Crystal microphones, of course, display the same effect.

Fig. 1 shows how the terminal voltage is affected by load resistance alone for a crystal of 1,500-mmfd. capacity. A resistance of 5 meg introduces practically no frequency discrimination while lower values reduce the low-frequency response as shown.

Fig. 2 illustrates the effect of load resistance on the response curve of a representative high-quality pickup. Experience has shown that for home reproduction on sets with good speakers, most listeners prefer the elevated bass response obtained with terminations of 0.5 meg or more, and therefore the service man should make certain that the point of connection to receiver or amplifier presents a sufficiently high resistance to the crystal pickup. On the other hand, if the speaker is very small, elevated bass response in the pickup is likely to result in bad distortion due to excessive speaker stiffness and poor radiating ability at low frequencies. In such cases, the practical solution is to reduce the bass response of the pickup until the overall performance is suitable. Try 0.5, 0.25 and 0.1 meg terminations until the best results are attained.

Since the crystal is a capacitive generator, the effect of shunt capacity is merely to reduce the voltage output of the pickup uniformly at all frequencies. No frequency discrimination is introduced by capacity only. Actually, however, the use of a resistance potentiometer volume control, in the presence of various circuit capacities, may introduce some high frequency loss. This, however, also occurs with sources other than crystal pickups. The effect can be minimized by methods which will be discussed.

Many modern receivers have input terminals which will accommodate a crystal pickup. The arrangement is frequently as shown in Fig. 3 where the receiver volume control is a potentiometer in the first a-f grid circuit. The phono-radio switch simply shifts this potentiometer from the phono input terminals to the detector output and vice versa. The receiver volume control also controls the volume on phonograph. The potentiometer should have a resistance of 0.5 to 1.0 meg as explained previously for proper bass response. Sometimes tone compensating circuits are tapped into the potentiometer. They will not ordinarily affect the phono reproduction adversely, but if the quality of reproduction is poor, or if the frequency response appears to vary considerably as the volume control setting is varied, it is advisable to test the effect of disconnecting the tone compensating networks from the potentiometer. If they prove to be the cause of the trouble, they should be switched out during phonograph operation. If the receiver employs the volume control method shown in Fig. 3 but has no provision for phono

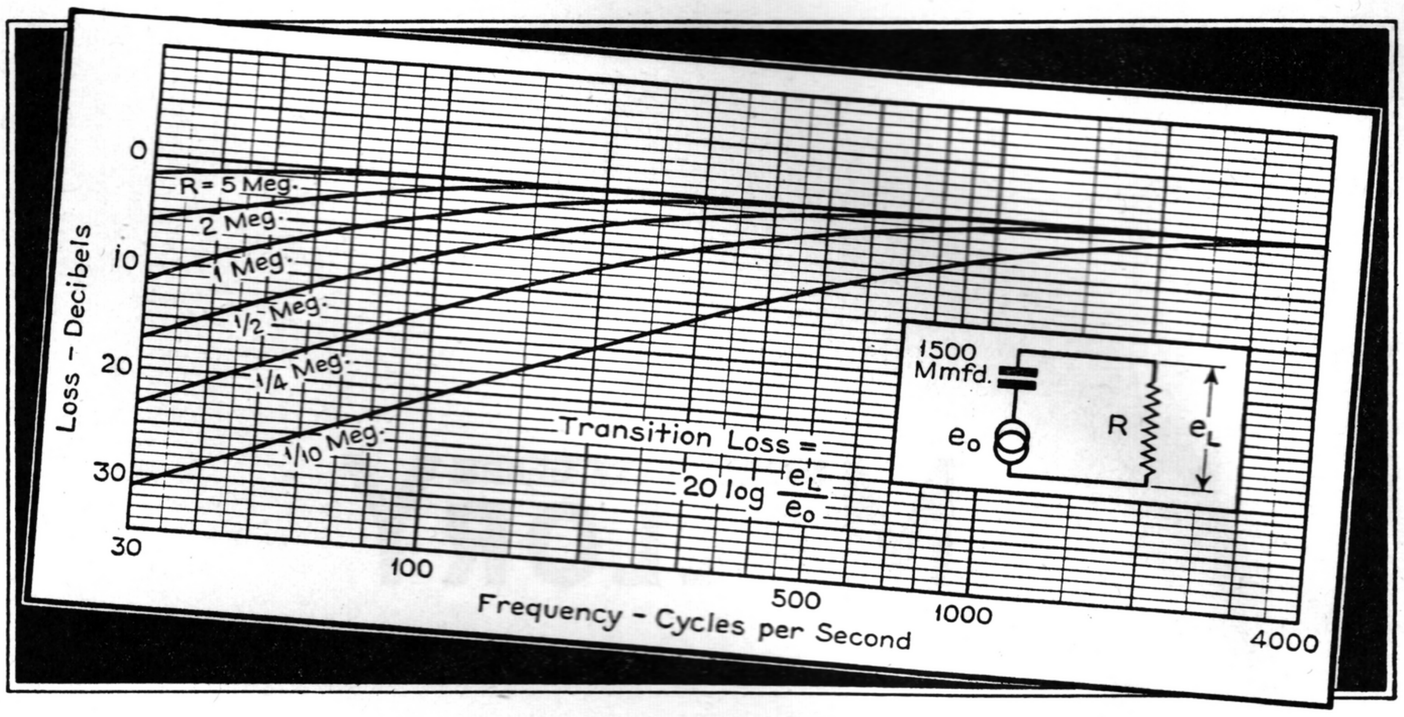

FIG. 1. *Since the impedance of the crystal pickup is highest at the low frequencies, the choice of load resistance will directly govern the low frequency response.*

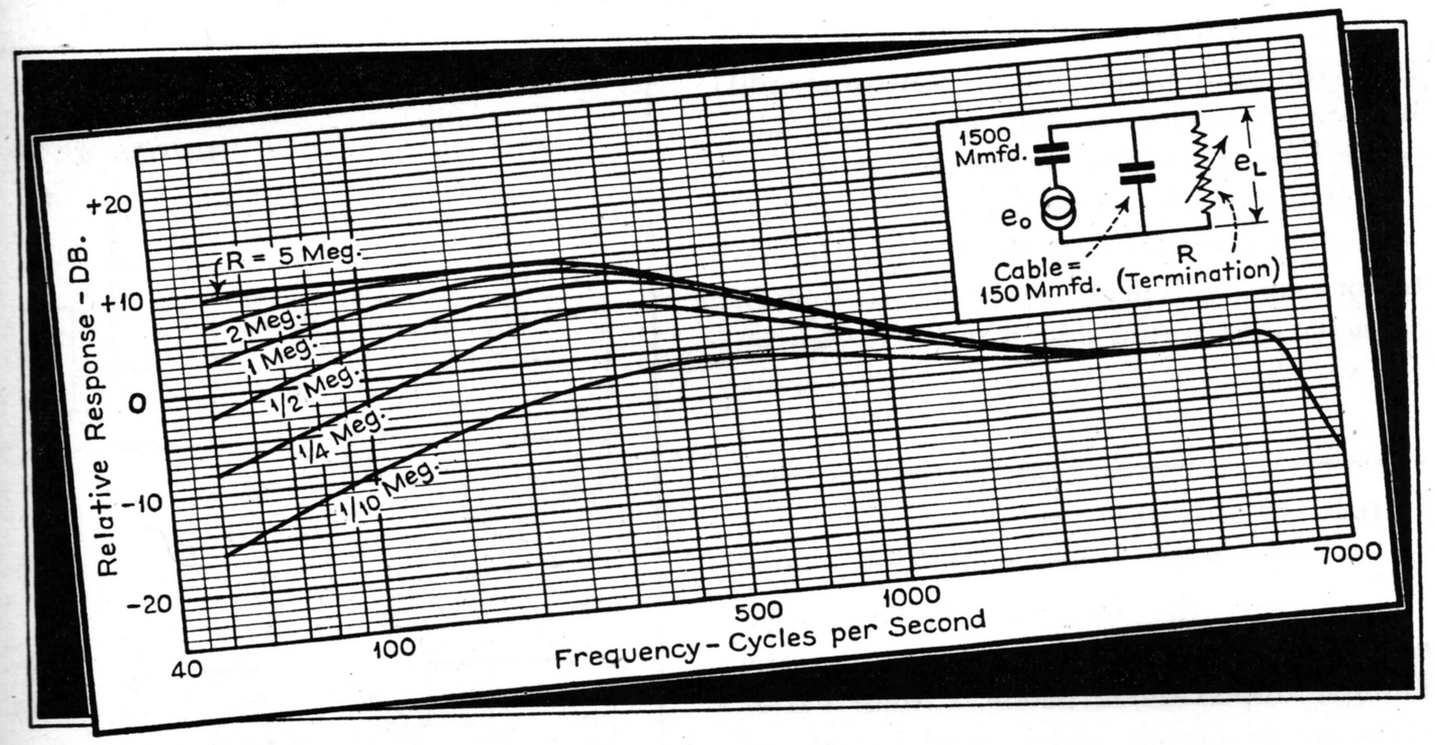

Fig. 2. *Experience has shown that most listeners prefer the elevated bass response obtained with terminations of 0.5 meg or more across the pickup.*

input, a single-pole double throw switch can be mounted on the chassis and wired as shown. The switch should be located near the potentiometer so that leads will be short and hum pickup possibilities minimized. It is advisable to shield the lead from the phono post to the switch. The switch should make on the phono position before breaking the radio circuit to avoid a thump due to momentary removal of grid bias.

Occasionally the audio system will have such high gain that the pickup will overload the first stage at full volume and necessitate working at such a low setting of the potentiometer that volume adjustments are critical and quality of reproduction may be poor. The remedy is a shunt condenser of 0.001 mfd or larger across the pickup at the input terminals. Increase the condenser capacity until there is no overloading apparent on listening test with the receiver volume control wide open. Pay particular attention to the bass reproduction during the listening test, for the maximum peak levels occur at the lower frequencies. Increase the size of the shunt condenser until the bass is clean.

It is always good practice to attain normal volume with the audio control of the receiver almost wide open. At medium and low volume settings, the input capacity of the tube plus stray circuit capacities form an L network in conjunction with the resistance in the upper section of the potentiometer with a resulting loss of the higher frequencies. This effect is largely avoided by operating at near-maximum settings.

When a volume control is provided on a simple crystal record player which is located some distance from the receiver, there will almost always be a loss of highs due to the effect of the connecting lead capacity in conjunction with the potentiometer resistance whenever the volume control is turned down below maximum. There is less loss of highs with a relatively low resistance potentiometer (of the order of 0.25 meg) but this may be offset by poor bass response, especially if the record player volume control and the receiver volume control are in parallel and combine to present a still lower terminal resistance to the pickup. When the feature of volume control at the record player is not absolutely essential, the reproduction will usually be improved considerably by disconnecting the record player control entirely, depending on the control at the receiver. Of course these remarks do not apply to record players of the wireless type or to those which incorporate an audio amplifier tube following the pickup; in these cases the tube associated with the pickup may effectively isolate the pickup volume control from the connecting line and subsequent equipment.

Many receivers of early vintage have no provision for phonograph pickup connections; others have phono connections which are only suitable for magnetic pickups. The alert service man can build up his profits by adding crystal record players to such receivers and by modernizing yesterday's phonograph combinations with improved pickups. Circuit changes to accommodate the crystal pickup are not difficult if a few fundamentals are kept in mind. In the first place, transformers are not required. They will *not* provide the proper terminal connections for high-quality crystal pickup performance. Connect the crystal pickup in the grid circuit of an audio stage across a resistance of 0.5 meg or more (which may be the radio volume control) and make certain that no low-impedance circuits are across the pickup.

A common receiver layout includes a power detector feeding the output stage. Radio volume control is probably effected in a preceding r-f circuit. The best solution is to switch the detector tube grid to a 0.5 meg pickup volume control mounted on the chassis (or motorboard if a combination) at the same time switching the bias to the proper value for Class A audio amplification instead of detection. Fig. 4 shows one possible arrangement.

As before, the switch blade connected to the grid should make in the phono position before breaking the radio circuit to avoid switching thump. The shunt resistor R_2 must have the proper value to make the parallel combination of resistors afford correct *amplifier* bias. Measure the *applied* plate voltage and then consult your tube manual for the correct bias voltage and plate current for *amplifier* operation.

Divide the required bias voltage by plate current to find the resistance which the parallel combination of R_1 and R_2 must provide. After installing the correct resistor R_2, recheck bias voltage and plate voltage.

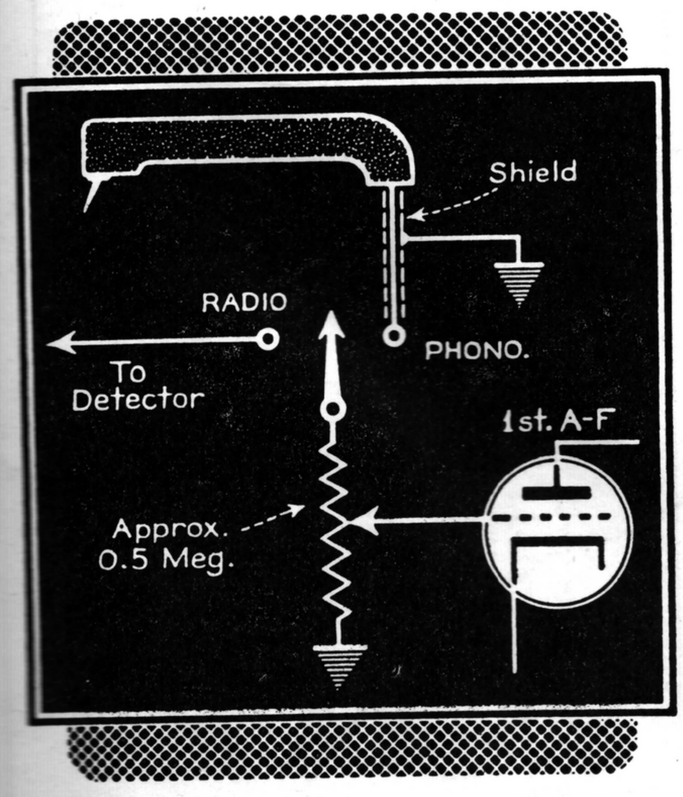

Fig. 3. *If the receiver employs the volume control method shown, a single-pole double-throw switch can be wired for phono operation.*

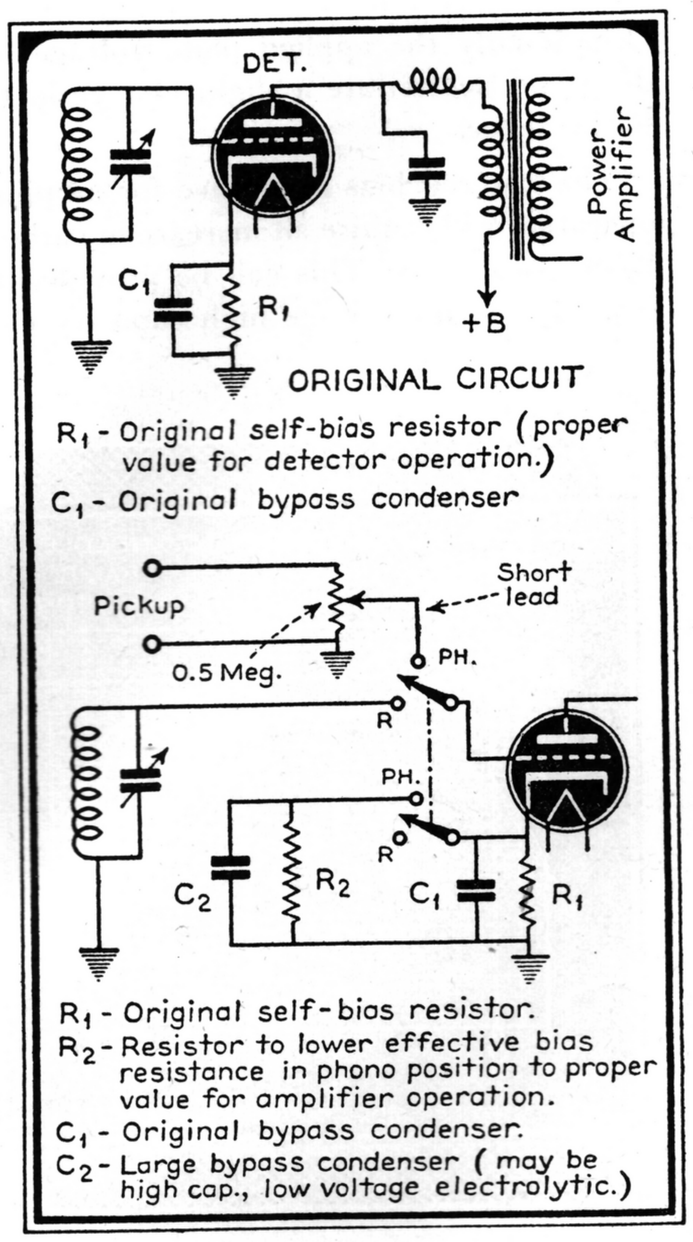

Fig. 4. *A common receiver layout includes a power detector feeding the output stage. The best solution is indicated.*

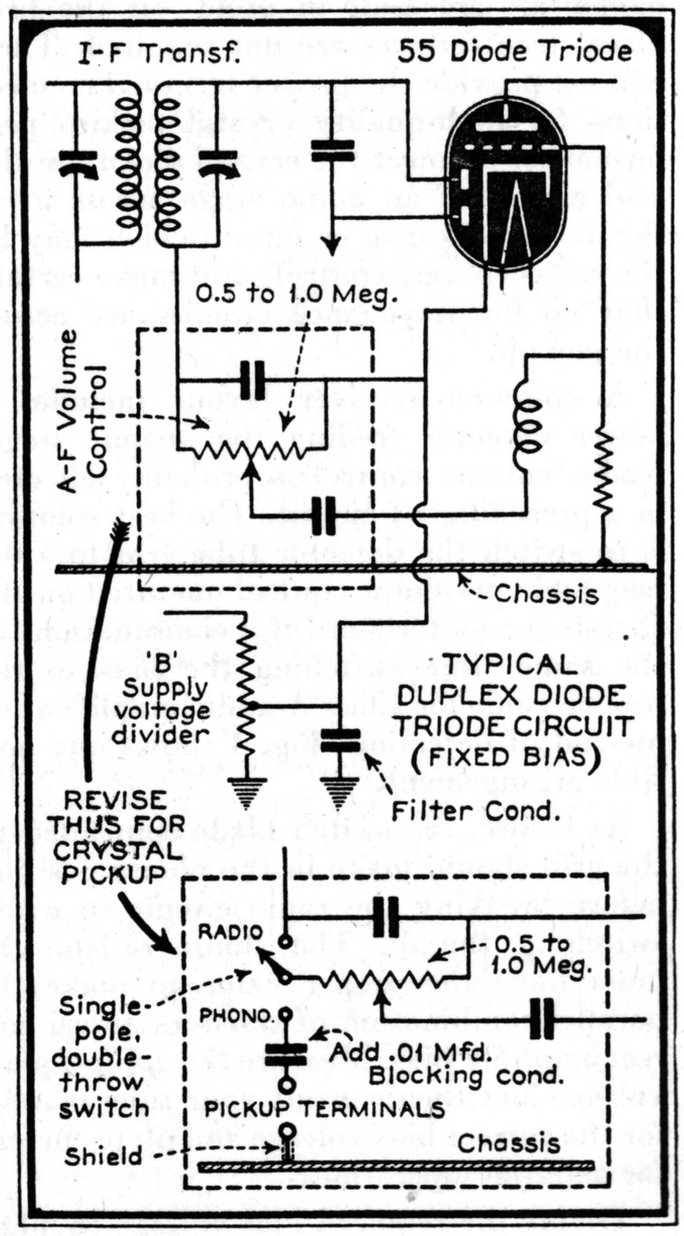

FIG. 5. *In grid circuits employing fixed bias a blocking condenser should be used to prevent the application of the bias to the pickup.*

Occasionally the applied plate voltage will drop and necessitate a slight change in the bias resistor.

The lowered bias resistance for amplifier operation will require an increase in cathode by-pass capacity. This can be provided by installing a low-voltage high capacity electrolytic or other suitable condenser at C_2. Both the switch and volume control should be located as close to the tube as possible. After these parts are mounted and the set operates properly on phonograph, it is wise to realign the tuned circuit feeding the detector which will probably be a little high in capacity due to that added to the circuit by the switch.

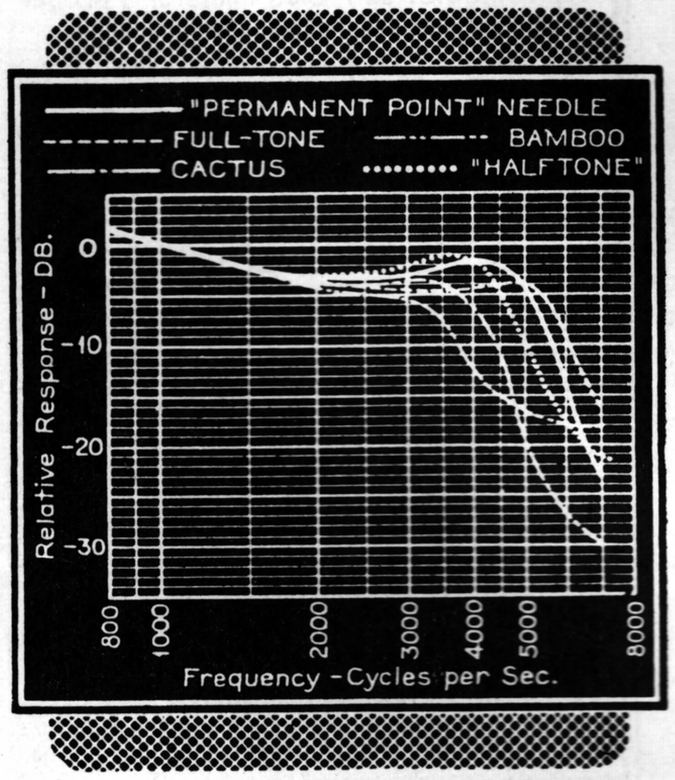

FIG. 6. *Special needles provide some scratch reduction because they cut-off earlier at the high frequency end.*

Diode-triodes

Frequently the detector and first audio element are combined in a single tube, the familiar duplex-diode triode. Circuit variations are numerous and a careful study of the individual circuit of the particular receiver is strongly indicated before the work is started. The problem is to get at the grid of the triode section, making use of the receiver volume control if possible. Particular attention must be paid to the method by which the cathode is biased.

A circuit in which fixed bias is employed is shown in Fig. 5, together with the proper switching circuit for crystal pickup. The only modification is the provision of a single-pole double-throw switch to shift the high-side of the volume control potentiometer from the radio circuit to the phono input with a blocking condenser in series to prevent the application of bias voltage to the pickup.

It should be remembered that even the most complicated circuit can be licked by switching grid and cathode to a separate phono volume control and self-bias resistor and by-pass condenser, respectively. Keep leads as short as possible and shield wires if hum is encountered.

Typical Switching Circuits

Immediately following is a series of 23 circuits, Figs. 8 through 31, representing a condensation of past and present methods for wiring phonograph pickups, magnetic and crystal, into radio receivers.

These circuits have been universalized to the extent that sections of switch wafers or gangs not directly concerned with the phono-radio transition are not included. This applies to such features as tone control position, wave band change, etc., where these operations have been combined in a multi-purpose switch.

A second treatment is the use of a standardized method of switch schematic drawing. As far as we know this system has no name, but we have referred to it as a "linear block" switch illustration. We believe it represents the most flexible and at the same time, most

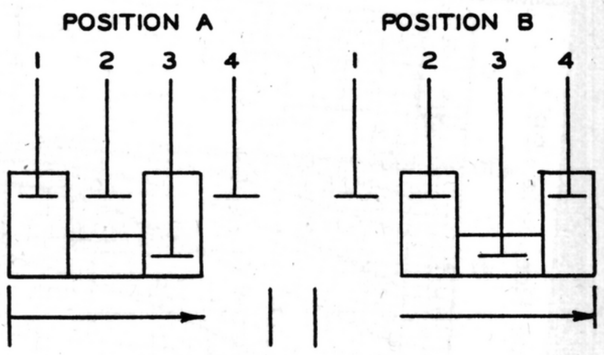

FIG. 7

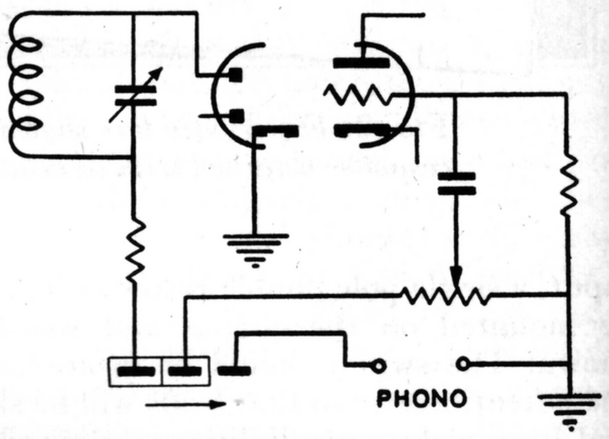

FIG. 8A—*Diode Load*

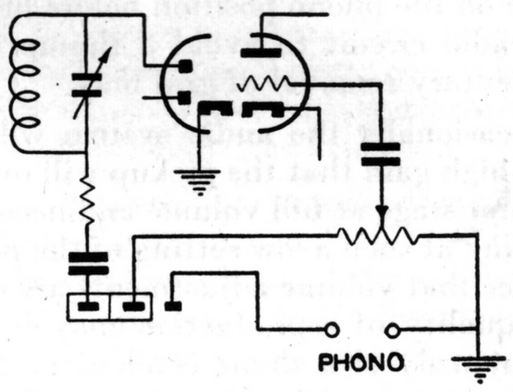

FIG. 8B—*First A-F*

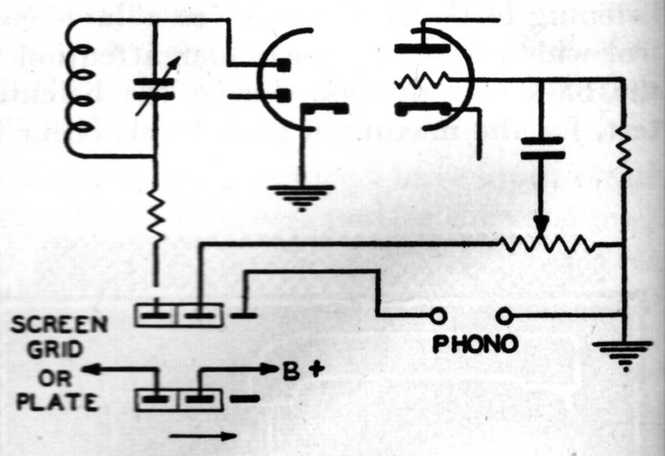

FIG. 9A—*Diode Load*

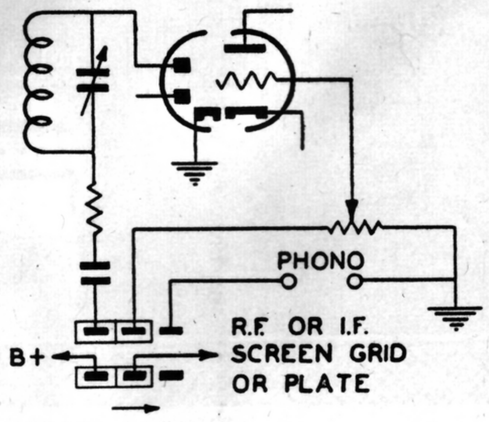

FIG. 9B—*First A-F*

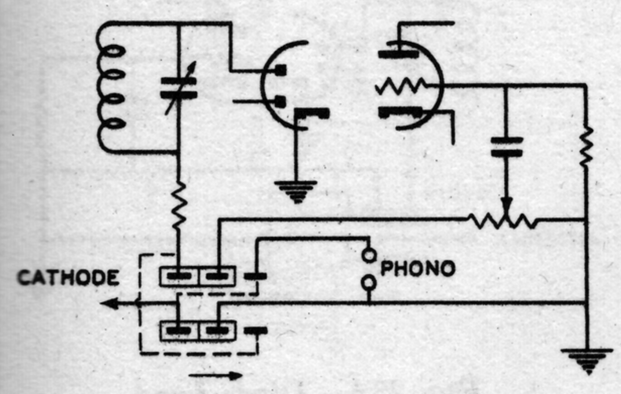

FIG. 10A—*Diode Load*

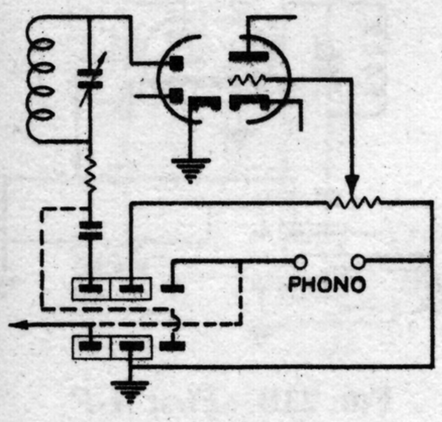

FIG. 10B—*First A-F*

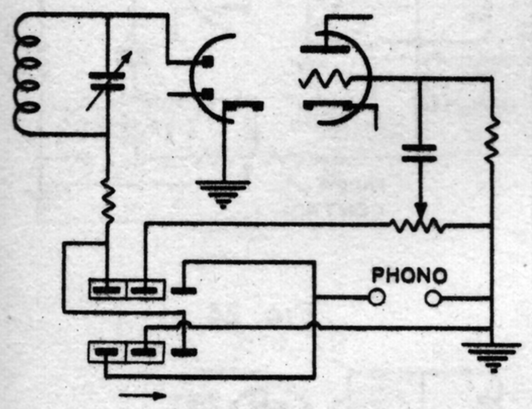

FIG. 11A—*Diode Load*

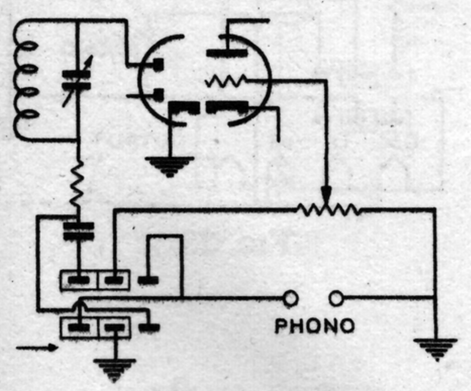

FIG. 11B—*First A-F*

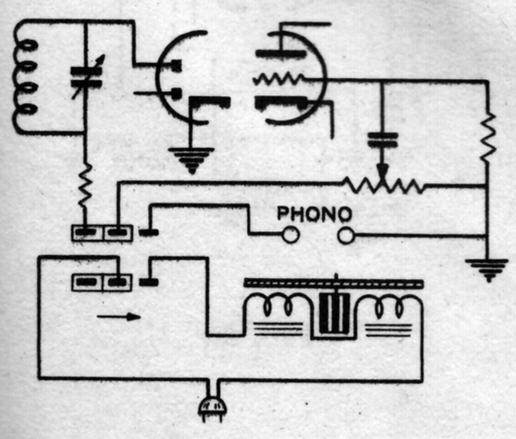

FIG. 12A—*Diode Load*

easily understood method of switch layout. It is not original with us; we first saw it employed in schematic diagrams of the Belmont Radio Corporation and we are indebted to them for its use here.

Fig. 7 shows an example of this system. Assuming it is desired that a particular application have two leads connected in one position, one of these leads to be unused in the second position, and the second lead to join two new leads not used in the first position, the wiring in Fig. 7 would apply.

In position A, leads 1 and 3 are connected, leads 2 and 4 are out of the circuit. In position B leads 2, 3, and 4 are connected together with lead 1 open.

Figures 8 through 27 show circuits in which the phono-radio switching operation is incorporated either in the diode load circuit of the 2nd detector or the first a-f grid circuit.

Figure 8 shows the most common switching circuit in use, namely that of circuit transfer only. The switch is shown in radio position and when pressed or turned it transfers the a-f lead of the volume control from the radio input to the phono input. Fig. 8A is diode load, Fig. 8B first a-f.

In Fig. 9 the second portion of the switch serves to break the screen or plate supply to an i-f or r-f stage to render the r-f portion of the receiver inoperative, thus preventing any radio signal from feeding through by lead or part capacitance. Fig. 9A—diode load; Fig. 9B—first a-f.

Fig. 10 shows a further variation in that the second portion of the switch breaks the cathode circuit of an r-f or i-f stage to provide the result outlined above. The dotted lines indicate the possibility of using the same switch to provide a shorting action for the unused input. Fig. 10A—diode load; Fig. 10B—first a-f.

In Fig. 11 the second function of the switch is also of a transfer nature. When the switch is in the radio position the lower section shorts out the phono input and when the switch is moved this shortout is transferred to the radio input lead. This circuit is an even more positive method of preventing any capacitive transfer of the unused input leads. It is usually incorporated in receivers where the phono or diode leads are by necessity rather long and possibly parallel to leads in the a-f stage.

Fig. 12 illustrates an application combining circuit transfer and motor control. When the a-f lead transfers to the phono input the second switch section cuts in the motor supply.

Fig. 13 is a combination circuit transfer, cathode break, and motor control system.

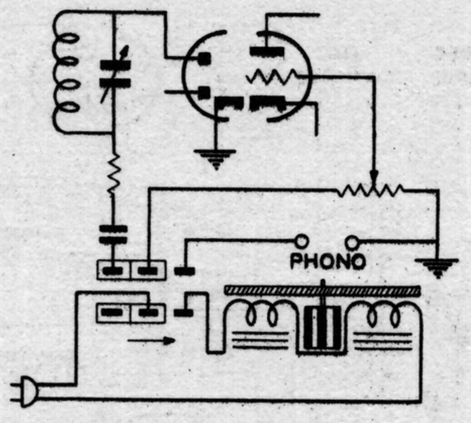

FIG. 12B—*First A-F*

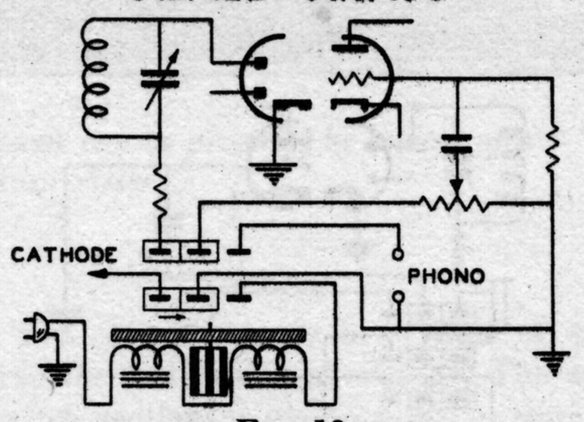

FIG. 13

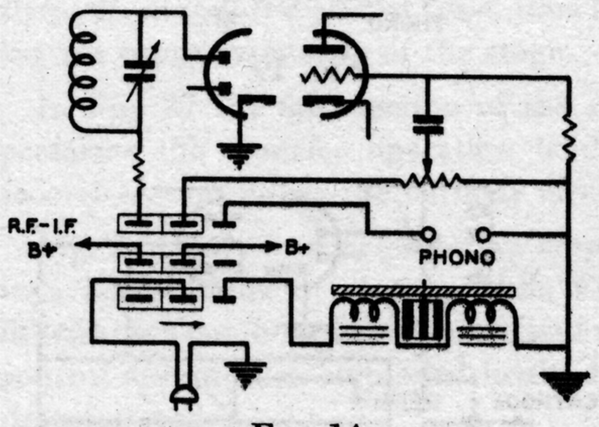

FIG. 14

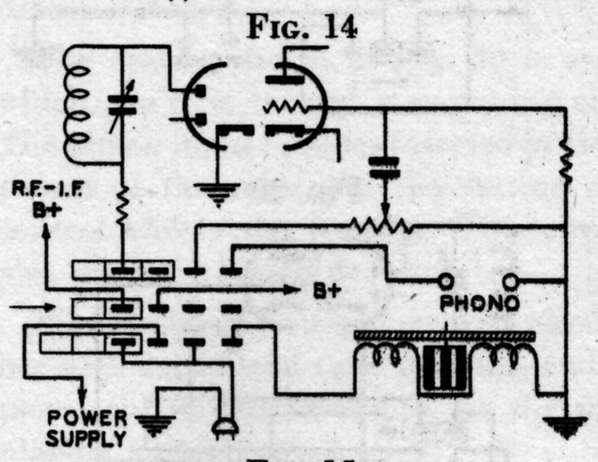

FIG. 15

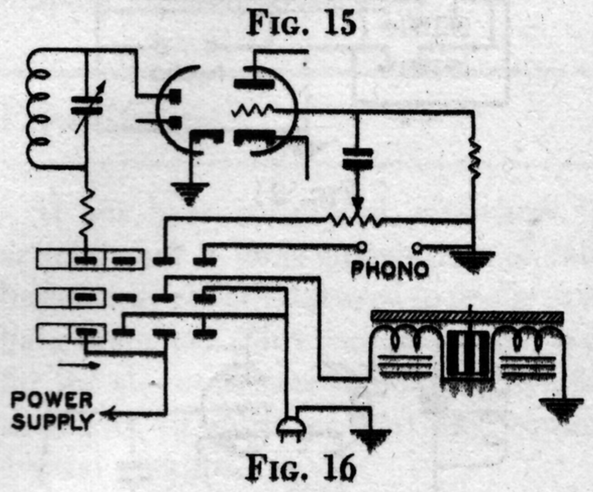

FIG. 16

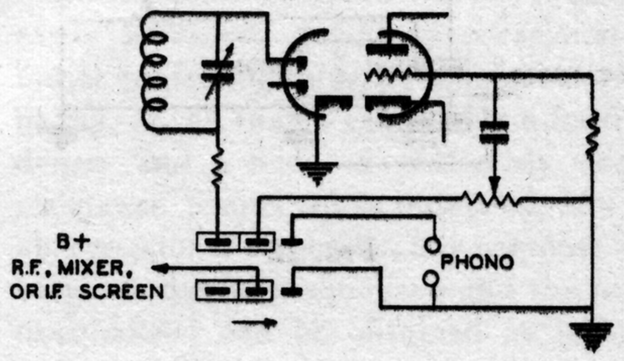

FIG. 17

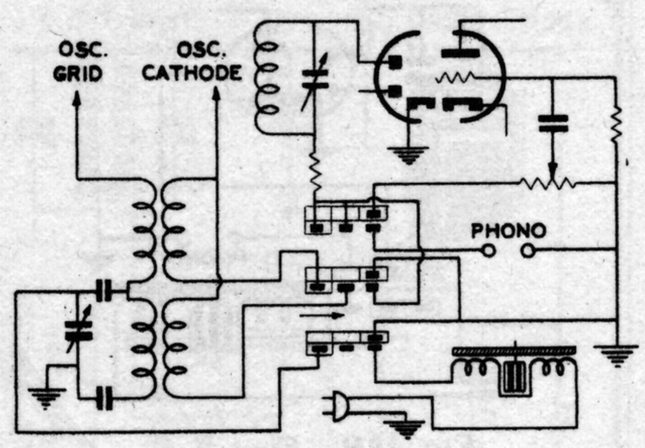

FIG. 18

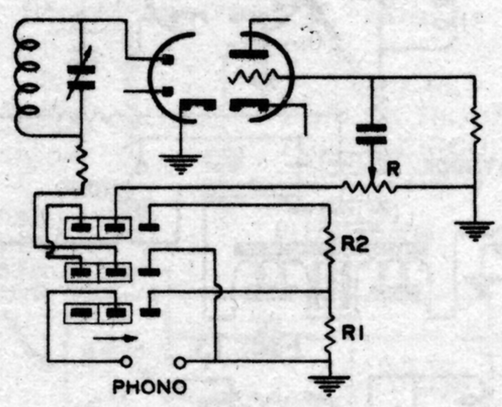

FIG. 19

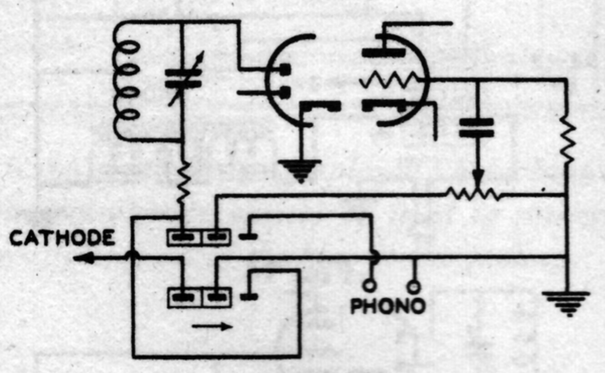

FIG. 20

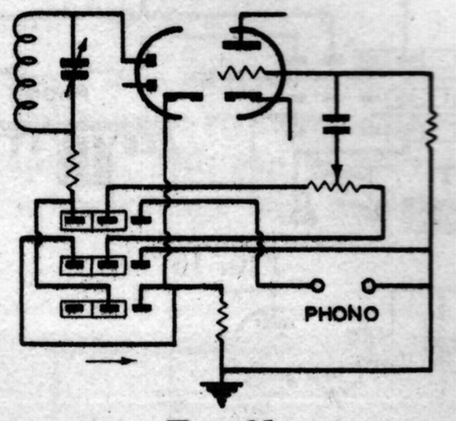

FIG. 21

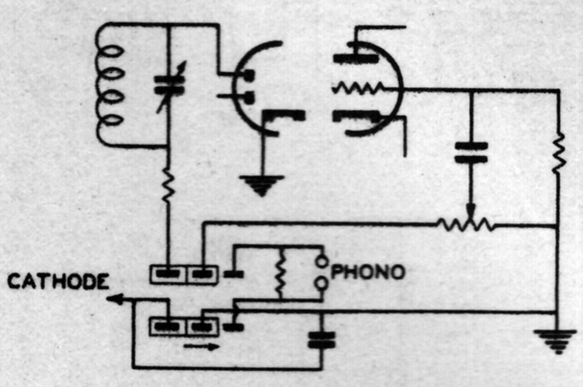

FIG. 22

When the first section transfers the a-f lead to the phono input, the second section transfers the common or ground lead from the cathode to the motor thus making the radio section inoperative and turning on the motor.

Fig. 14 is similar to Fig. 13 except that a three-section switch is used and the plate or screen supply of an r-f or i-f stage is broken instead of the cathode as in the case of Fig. 13.

In Fig. 15 the functions of receiver on-off, circuit transfer, B+ break, and motor control are combined in a three-section, four-position switch. In the first position the receiver power is off. In the second position the radio section is used. In the third position the a-f lead transfers to the phono input, the plate or screen supply of an r-f or i-f stage is broken, and the motor is at rest position for changing records. In the fourth position the a-f lead-phono input contact is maintained, the B supply still broken, and the motor operates for playing.

Fig. 16 employs a three-section four-position switch to provide receiver on-off, circuit transfer, and motor control. Position 1 is receiver off, position 2, receiver on-radio use, position 3 phono use-record change, and position 4 phono use-record play (motor on).

Fig. 17 illustrates a system of circuit transfer and removal of r-f, i-f or mixer screen voltage. The second section of the switch when in phono position grounds the screen of the desired stage. In sets employing this circuit, the screen voltage is low enough or rather the screen dropping resistor sufficiently high in value to prevent excessive current flow through the resistor.

The system shown in Fig. 18 has the following functions: circuit transfer, coil change, radio shortout in phono position, and motor control. Position 1 is radio receive on a certain frequency; position 2, radio receive on a second frequency; and position 3, phono with motor cut in and diode return lead shorted out.

Fig. 19 combines the circuit transfer, radio shortout and a-f load change operations in a three-section, two-position switch. In radio position, sections 1 and 2 provide an a-f load consisting of the volume control "R." In the phono position, sections 1 and 3 provide a shunt circuit R_1 and R_2 across the control with the phono input entering at the junction of R_1, R_2, limiting the voltage applied to the a-f stage because of the series connection of R_2 and R, and further providing a load match for phono input, of R_1 shunted by R_2 and R.

Fig. 20 illustrates a circuit transfer type with a second section transferring the ground or common to the diode return lead. Thus in phono position the cathode of an r-f stage is broken and the diode return lead grounded to provide positive radio cut out.

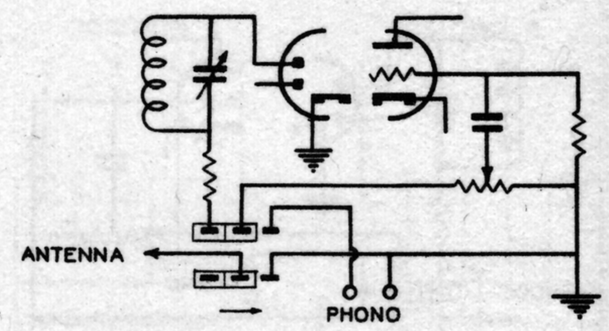

FIG. 23A—*Diode Load*

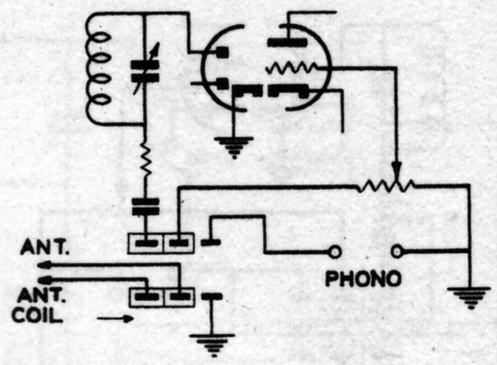

FIG. 23B—*First A-F*

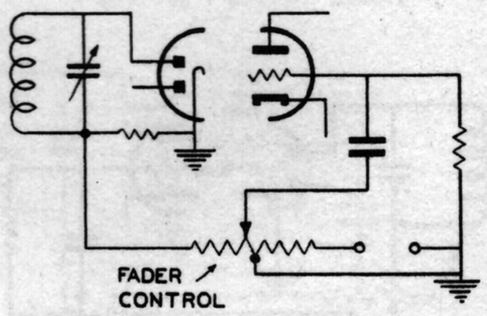

FIG. 24

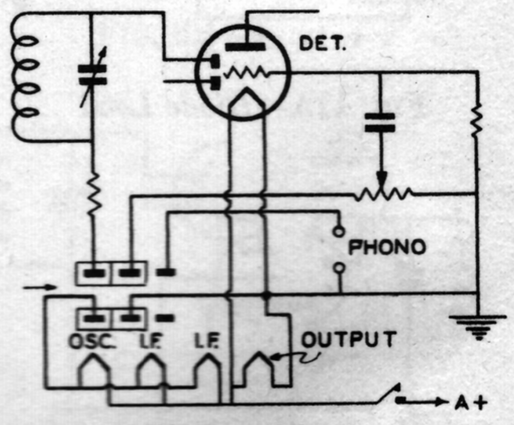

FIG. 25

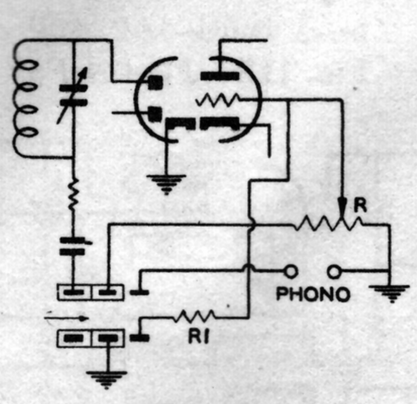

FIG. 26

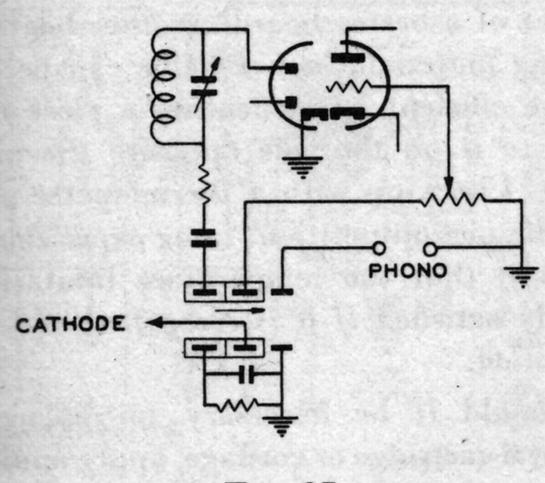

FIG. 27

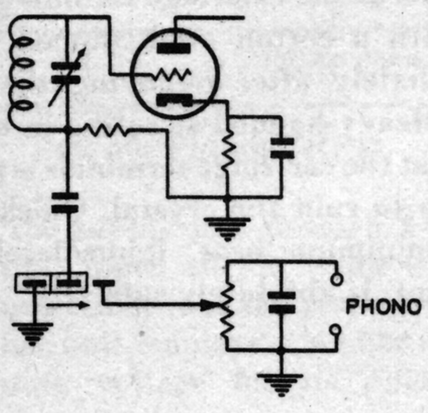

FIG. 28

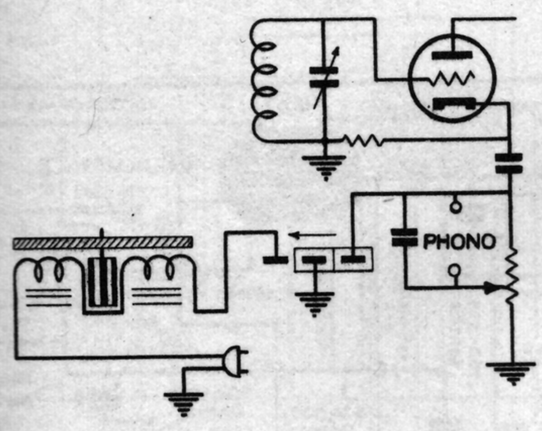

FIG. 29

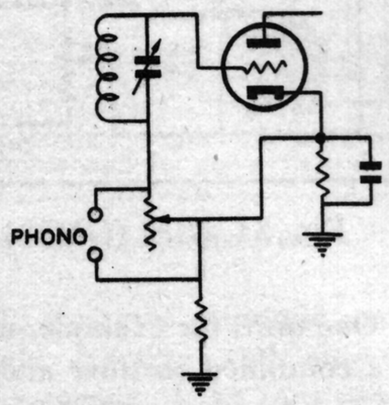

FIG. 30

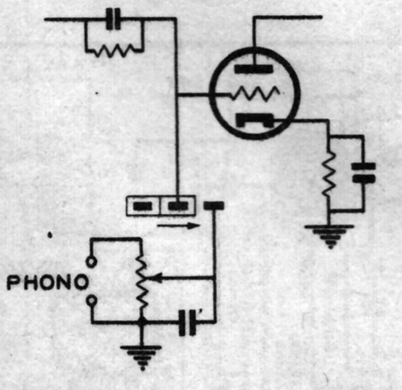

FIG. 31

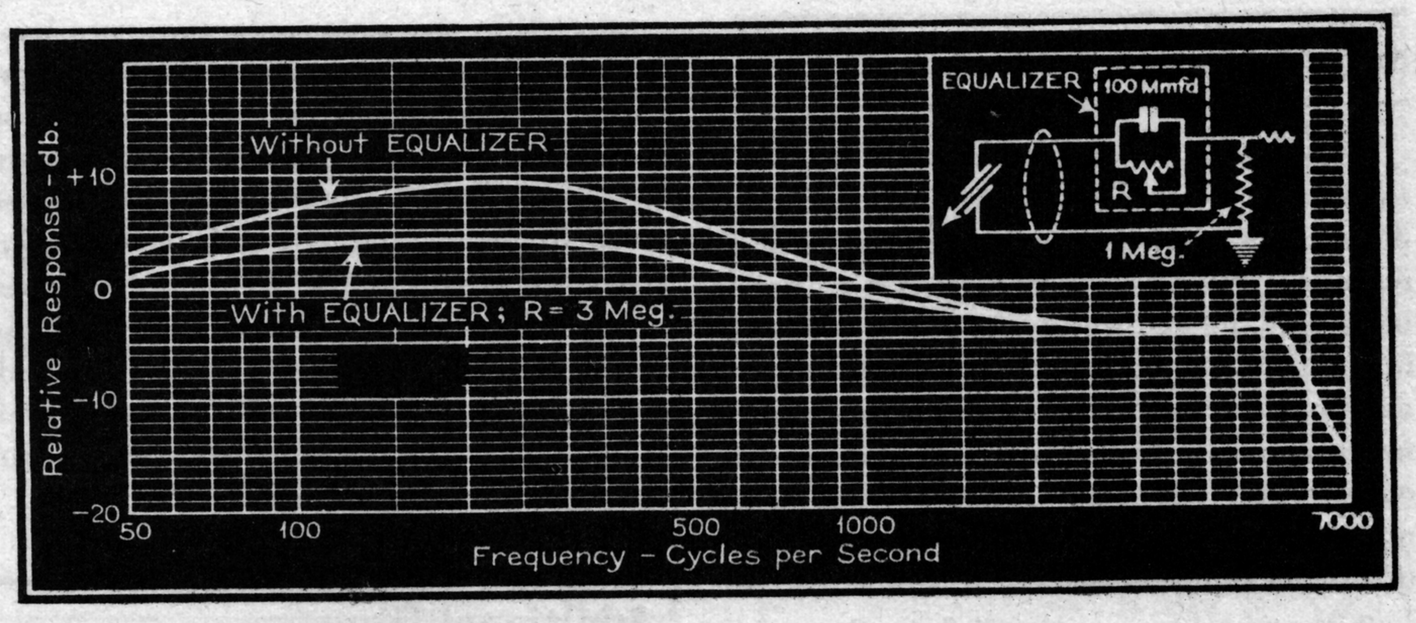

FIG. 32. *Equalization for relatively flat response can be provided by means of a fixed condenser and a resistor.*

In Fig. 21 a three-section, two-position switch provides for circuit transfer, diode return lead shortout, and bias circuit change. In radio position the high side of the volume control connects to the diode return lead and the low side of the control is connected to the cathode. In phono position the high side of the control connects to the phono input and the low side of the control is grounded. The diode return lead connects directly to the cathode.

The circuit shown in Fig. 22 provides circuit transfer, cathode break, and load change for phono use. In radio position, the a-f lead connects to the diode return and the cathode circuit is complete. In phono position, the a-f lead transfers to the phono input which has a resistor shunted across it, thereby lowering the grid resistance to a value comparable to the specific pickup unit. Also, the second section transfers the ground or common to open the cathode circuit and ground the low side phono input.

Fig. 23 illustrates a different method of silencing the radio section in that a second portion of the switch performs an antenna shortout in the phono position. The first section is the usual transfer on the a-f lead.

Fig. 24 can't logically be called a switching circuit since no switch is employed, but it does transfer from radio to phono by using a center tapped control, tapered both ways from the center. When the variable contactor is on the lower half it controls the phono input. As it passes the center ground point the phono input gradually reduces to zero and the radio input is controlled in the upper half.

A clever system for use in battery-powered receivers is illustrated in Fig. 25. In this circuit the first section of the switch transfers from diode to phono, while the second section opens the filament leads of the oscillator and i-f stages, rendering the r-f section inoperative, and keeping the battery drain at a minimum.

Fig. 26 illustrates a system of circuit transfer and grid load change. The second switch section in phono position shunts resistor R_1 across the grid of tube, thus lowering the input resistance of the stage.

In Fig. 27 the first section of the switch performs the transfer operation while the second section alters the cathode circuit.

Fig. 28 shows a transfer action employed in a biased detector circuit, while Fig. 29 illustrates a combination shortout and motor control system also employed in the biased detector stage.

The system shown in Fig. 30 is another which can't be termed a switching circuit. The phono input is series inserted in the grid return of the tube and the setting of the control effects the transfer. This circuit is also that of a biased detector.

Fig. 31 shows a simple transfer circuit for use with a grid lead type detector, and completes the circuit examples for the phono-playing switching operations.

Equalizing

It has been intimated, elsewhere in this article, that a large percentage of radio set buyers have been educated to prefer excessive bass response. This fact probably accounts for the elevated bass response which is characteristic of most present-day commercial crystal pickups.

Equalization for relatively flat response is easily provided, should an occasional customer prefer high-quality music. As shown in Fig. 32, all that is required is a fixed condenser and a fixed or preferably variable resistance, connected as indicated. If a variable resistor is employed, any response curve between the fully equalized and the normal unequalized can be obtained at will. The curves shown have been matched at the high frequency end and therefore indicate only the relative frequency response.

Scratch Noise

It has been a common notion that sharply-tuned rejector circuits would eliminate needle scratch or surface noise in phonograph reproduction. The reasoning seems to have been that the disturbing noise was localized in a narrow band around 2500 or 3000 cycles and that the removal of the audio components in substantially this band alone, would considerably lessen the reproduced surface noise with minimum effect on the general quality of reproduction.

Without going into detail regarding special cases that are of little practical interest, it appears that there are no appreciable benefits in narrow band-elimination from the noise reduction standpoint. Surface noise components are of random character and are distributed throughout the entire audio range. Effective noise reduction goes hand-in-hand with reduction in quality of reproduction. Special needles (such as halftone, cactus, bamboo, etc.), provide some scratch reduction because they cut-off earlier at the high frequency end, with of course a corresponding elimination of what may have been recorded in the lost frequency interval. Adjustment of the ordinary tone control of the receiver or amplifier, with its adjustable, tapering high frequency loss, will probably completely satisfy most listeners.

Additional Hints

Crystal pickups, crystal cutting heads, and crystal microphones will not withstand temperatures above 125°F. for long periods of time. Make sure that adequate cabinet ventilation is provided. Deflect heat from power and rectifier tubes if necessary with a sheet of asbestos board or other heat insulating material. Such a baffle can be made more efficient by cementing a piece of tin foil to it on the side opposite the pickup unit. Check-up with a thermometer placed at the pickup position. Long experience has proved that the temperature limitation is easily satisfied *if it is recognized and given attention.*

Should it be necessary to replace the crystal cartridge or cordage, apply minimum heat when unsoldering and resoldering connections at the cartridge terminals. Cool the lug with a cotton swab dipped in alcohol immediately after removing the soldering iron. Heavy-handed sweating-in of soldered joints at the cartridge terminals is practically certain to ruin the crystal. Quick soldering with minimum heat, immediately cooling the joint, is absolutely safe.

Wireless Record Players

Keeping in mind the information obtained from the preceding discussion of crystal pickups we can go a step farther and see how these units are employed in commercial wireless players.

The popularity of wireless record players is undoubtedly due to a number of factors. In the first place, the mystery feature, i.e., the fact that they play through the radio without direct connection, is intriguing. In addition, the record player may be placed at any convenient location, the location being limited only by the distance from the receiver and the convenience of an AC outlet. Further, these wireless players are relatively inexpensive and simple to operate. When properly designed they are capable of good quality.

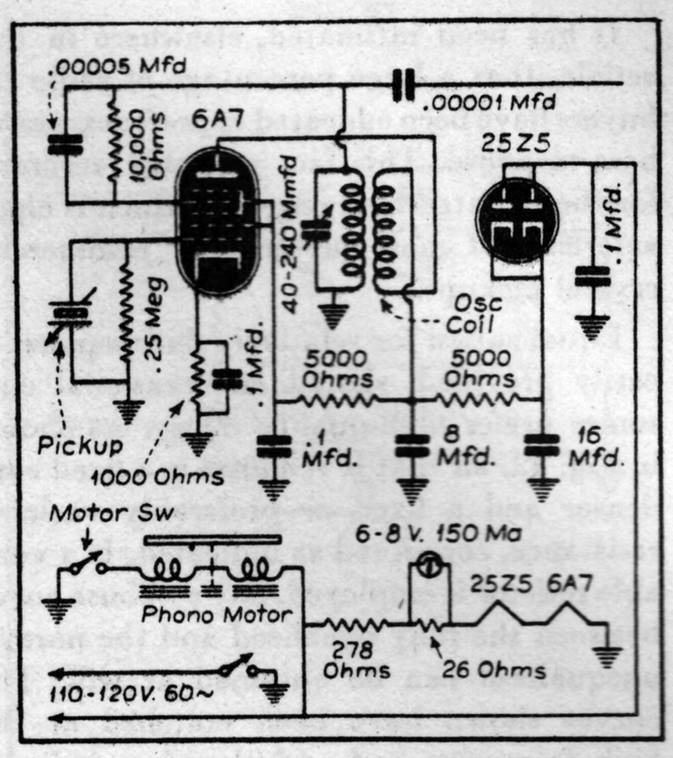

Fig. 33. Wilcox-Gay (A56, A57, A60).

The principle of operation of these units is quite simple. As pointed out previously, these record players are nothing more than a low-power broadcast transmitter. Referring to the typical circuit, such as Fig. 33, it will be seen that the unit contains two tubes, one operating as an oscillator-modulator and the other as a rectifier. The oscillator-modulator, generally a 6A7 or similar tube, is modulated with audio by means of the crystal pickup and the phonograph record being played. The oscillator is tunable over a small range in the broadcast band, this tuning being accomplished by means of a trimmer.

Microphone connections are provided in some of the units as an additional feature. Crystal pickups are used in all cases. The turntable speed is, of course, 78 rpm and all units are designed to use either 10 or 12 inch records. In most cases self-starting induction motors are used to drive the turntable, although in some instances a manual-starting synchronous motor is employed. As a result, operation is from a 110-volt, 60-cycle power supply. Detailed information as to trade names, tubes used, turntables, pickups, etc., is given in the chart which accompanies this article.

Various record players and their circuit diagrams are shown in Figs. 33 through 44.

In referring to the schematic drawings a number of rather unusual circuits will be noticed. One unit, for example, uses a 12A7 tube as a combined rectifier and oscillator. (See Fig. 34.) Another unique feature of this same unit is the method of obtaining heater voltage. Instead of employing the more conventional method of obtaining heater volt-

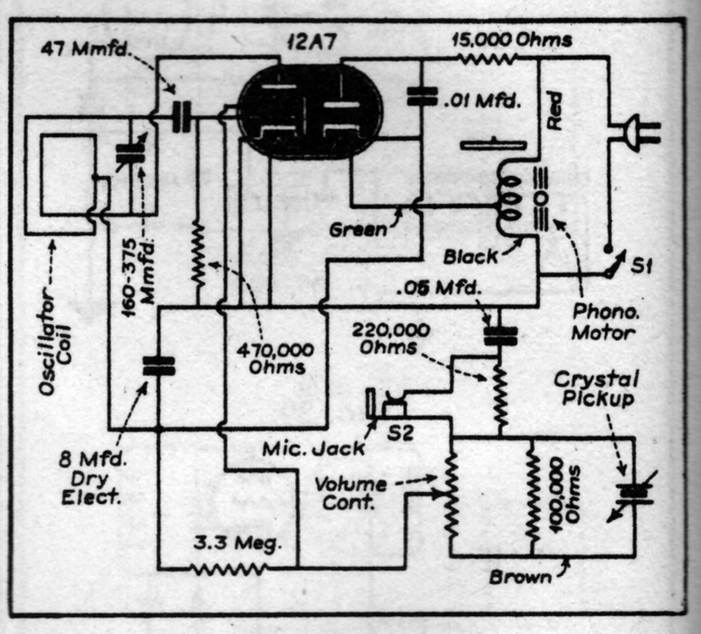

Fig. 34. G.E. (GM11).

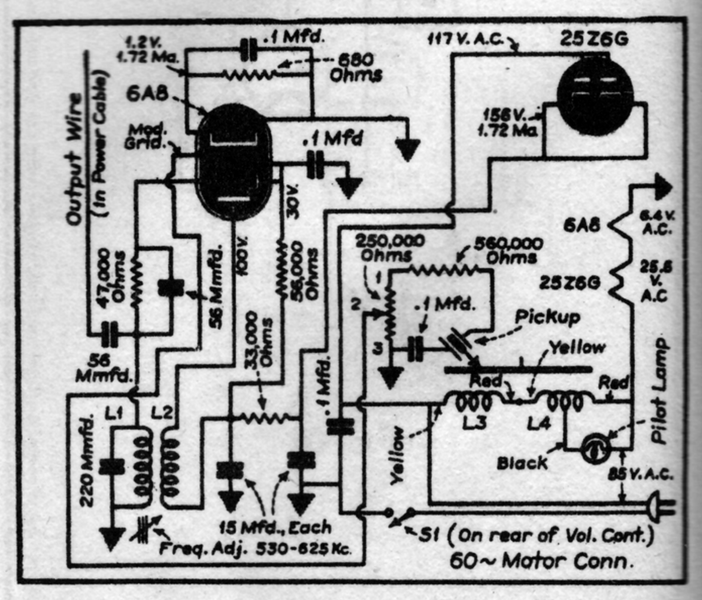

Fig. 35. RCA (VA20, 21).

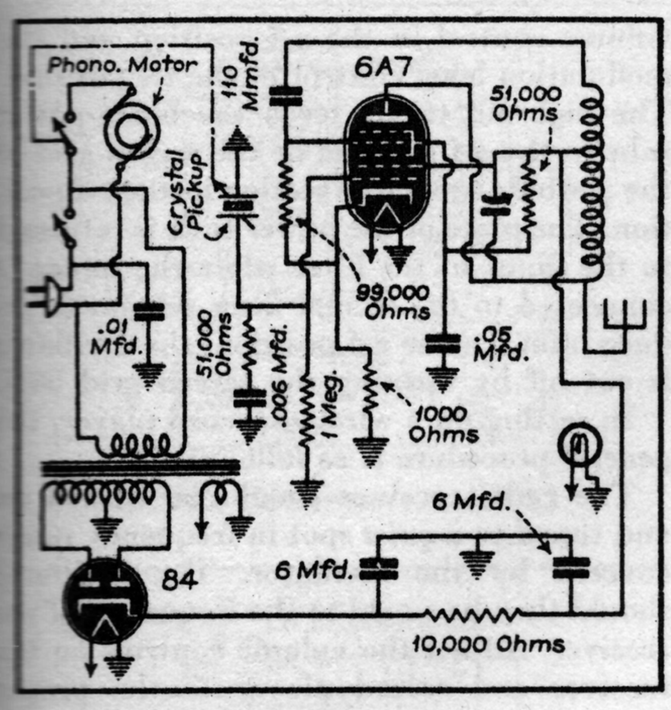

FIG. 36. PHILCO (RP1).

age from the supply line through a ballast resistor, it is tapped off the motor winding. In this connection, it is interesting to note that another unit employs a similar method for obtaining voltage for its pilot lamp (Fig. 35).

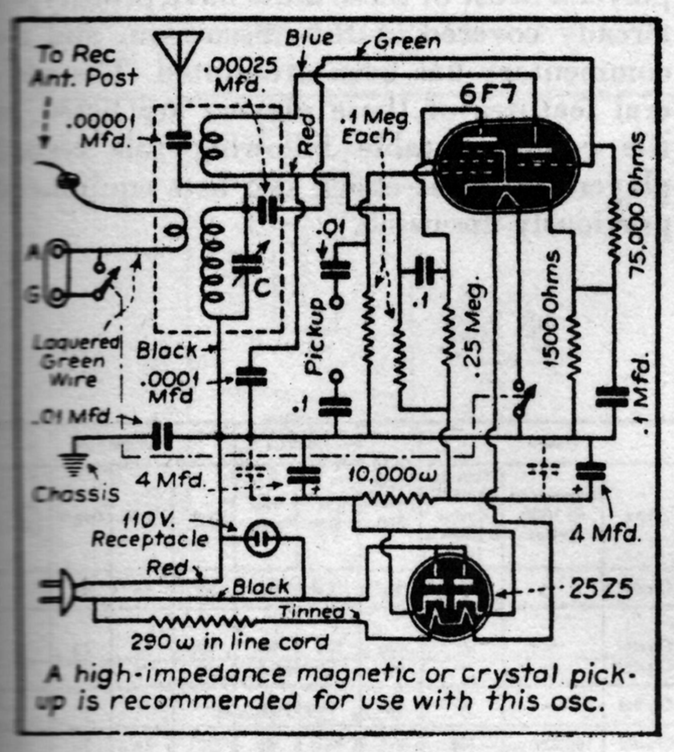

FIG. 37. MEISSNER.

In Fig. 36 is shown a unique method for automatically starting and stopping the turntable by means of the tone arm. When

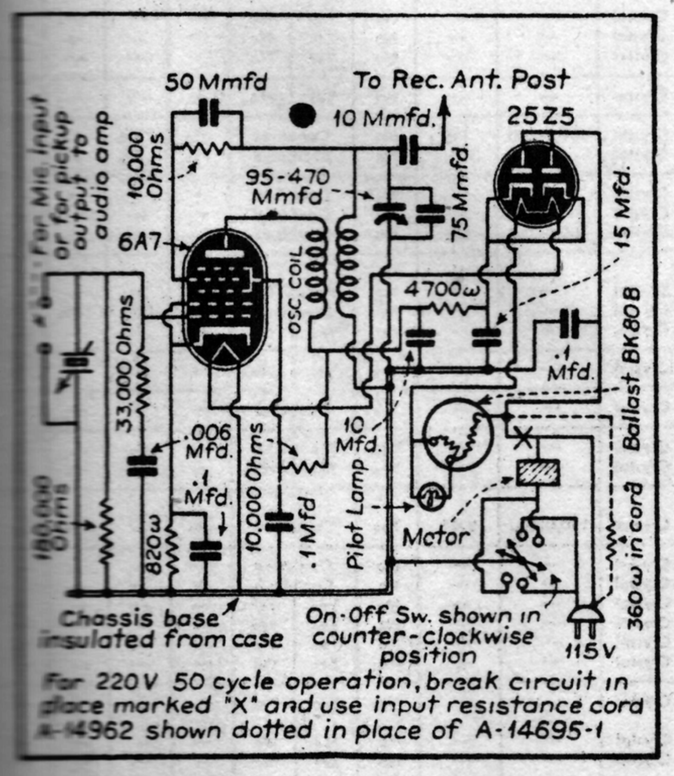

FIG. 38. SPARTON (219P, 219PD).

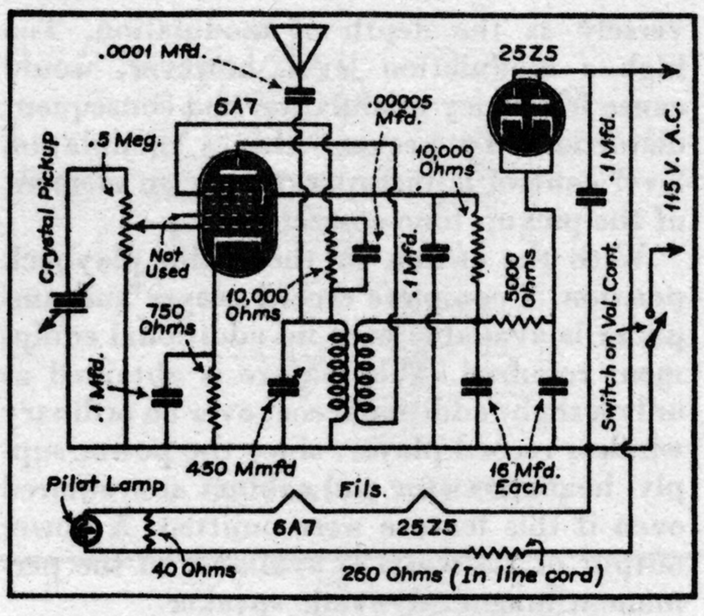

FIG. 39. SONORA.

the pickup is placed on the record, it automatically closes the motor switch and starts the turntable. Similarly, when the tone arm is removed from the record, the motor switch is automatically opened.

Also of interest is the phonograph oscillator shown in Fig. 37. This type of unit is designed for operation through a direct connection to the receiver antenna circuit and will not ordinarily supply sufficient radiated signal to provide satisfactory wireless operation, even if the coil shield is removed. There is no reason, however, why the same components and exactly the same circuit would not provide wireless operation if a simple addition were made.

A radiator connected to the oscillator coil (indicated as an antenna in the circuit of Fig. 37) will provide satisfactory results, especially if this radiator is included in the power line cord. Four to six feet of wire should provide ample radiation. Some difficulty may be experienced from broadcast interference with the signals from the record player. In general the wireless units use a radiation frequency which is more free from such interference.

Particular attention is called to the Dewald Model 411, the schematic of which is shown in Fig. 44.

It is a 2-tube wireless record player that permits the owner to play recordings through a remote radio receiver or directly through an a-f amplifier and a small speaker incorporated in the playback unit. The device employs two new multipurpose 0.3 amp

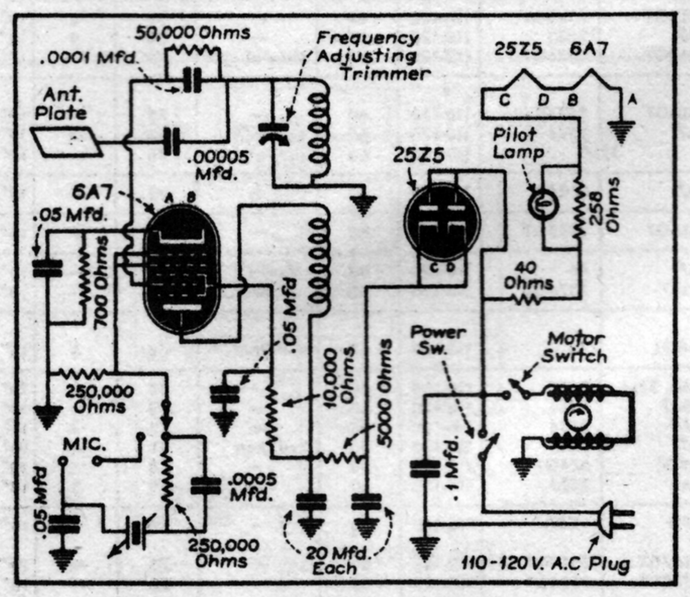

FIG. 40. ADMIRAL (AW11).

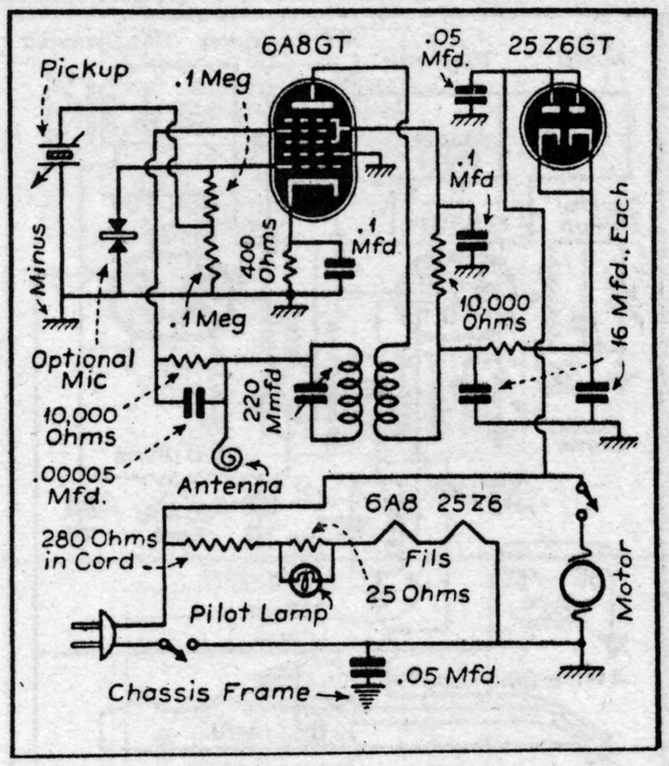

FIG. 41. ESPEY (922)

tubes, the 12B8GT r-f pentode-triode and the 32L7GT beam power amplifier-rectifier.

The high-mu triode section of the 12B8GT amplifier tube serves as an audio amplifier in both modes of operation. With the switch

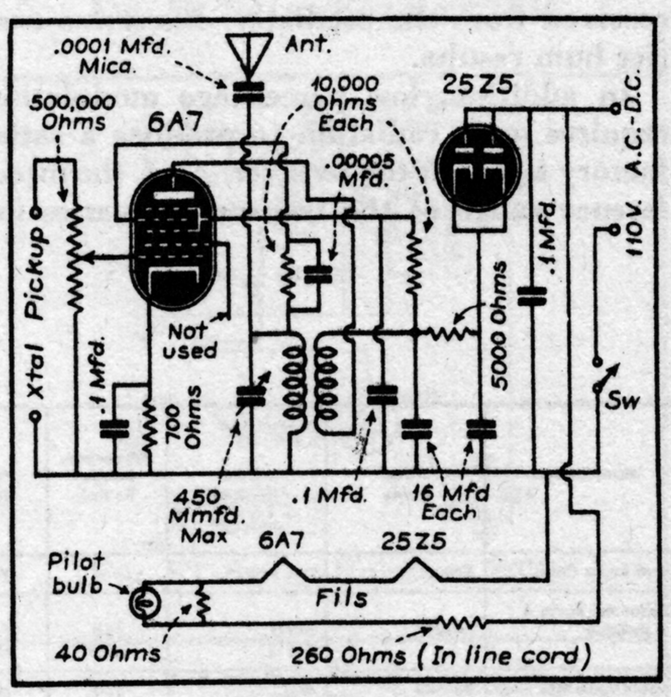

FIG. 42. KNIGHT.

in the r-f playback position, the a-f amplifier is necessary to provide a high percentage of modulation. In wireless playbacks where the pickup operates directly into the r-f oscillator the percentage of modulation is

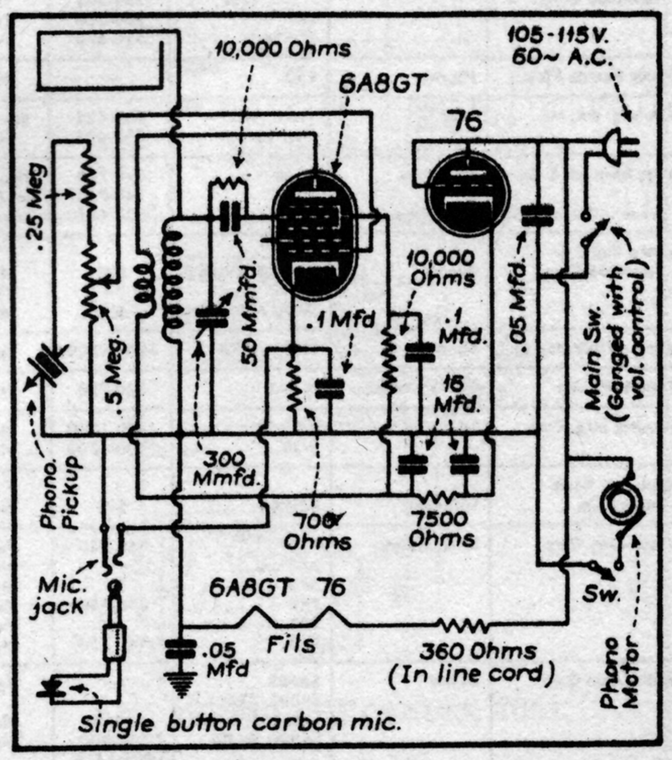

FIG. 43. LAFAYETTE.

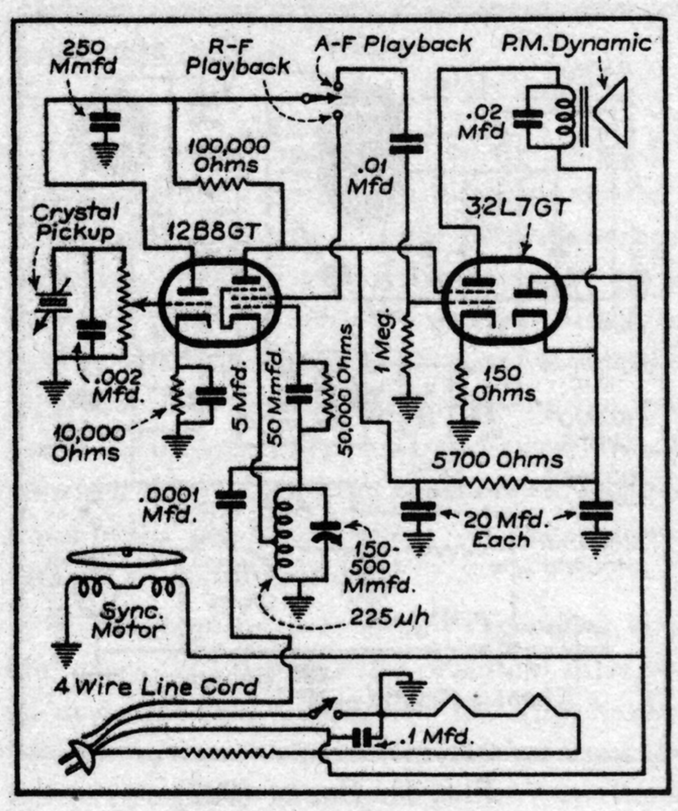

FIG. 44. DEWALD 411.

often too low. This makes it necessary for the listener to turn the receiver gain up higher in order to obtain normal room volume even though a strong carrier is being received from the oscillator. Excessive carrier hum results.

In addition, low percentage modulation requires more radiation to produce a satisfactory signal at the receiver. Also, the interference range of the transmitter varies inversely as the depth of modulation. Too high a modulation level, however, would cause frequency modulation and consequent distortion. To prevent this a modulation level control is incorporated as an element of the pickup tone corrector.

With the switch in the audio playback position, a complete record player and amplifier is available with no additional equipment required. This feature is obtained at only a slight additional cost over an ordinary wireless record player, since the power supply, heater resistor and cabinet are required even if this feature were omitted. A power output of 1.4 watts is available to the permanent magnet dynamic speaker.

Two controls are used, one for level with the on-off switch incorporated and the a-f, r-f switch. The carrier frequency is adjustable over a small range around 550 kc. The padder is accessible through a hole in the top of the panel.

A 4-wire line cord is used, 3 wires for the power and filament resistor and the fourth is the antenna. This arrangement with the antenna coupled to the hot end of the oscillator tank through a 0.0001 mfd condenser, allows satisfactory reception as a wireless unit up to about 40 feet. A 0.1 mfd by-pass condenser across the line keeps the r-f energy from the lighting circuit.

A crystal pickup is employed with a tone correcting load circuit. The resistor is the volume control in the a-f position and the modulation level control in the r-f position. The high-mu triode feeds the beam-power tube in the a-f position or the screen grid of the pentode oscillator section in the r-f position. The plate of the power tube is returned to the input of the filter while the screen is connected to the second filter section to reduce hum. In the a-f position, the oscillator is cut off by opening the screen grid lead.

In setting up a wireless record player, the general procedure is as follows:

The radio receiver should be turned on and tuned to a *quiet* spot in frequency range covered by the oscillator. The oscillator should then be tuned to the frequency of the receiver. Adjust the volume controls on the receiver and record player to the proper levels. In very noisy locations, it may be necessary to wrap several turns of the oscillator antenna around the antenna lead-in to the receiver. In receivers having push-button tuning, one of the buttons may be set up for the oscillator frequency.

Figures 45 through 73 show schematic diagrams of later types of wireless record players. Most of these units have prototypes already covered in this discussion, and no commentary has been attempted. The general features of these players are listed in the complete table following this record player text. The chart also lists equipment previously discussed.

Manufacturer	Trade Name	Model Number	Frequency Range (In Kc.)	Pilot Light	Tubes		Voltage	Cycles	Motor Type	Turntable			Pickup			Mike Connection	Controls		Dimensions			
					Osc.-Mod.	Rect.				Speed	Diameter (In Inches)	Record Size	Type	Impedance @ 1000 Cycles	Voltage @ 1000 Cycles & 250MΩ Load		On-Off	Volume	Hgt.	Wdth.	Depth	Wgt. (Lbs.)
Allied Radio Corp.	Knight	—	—	Yes	6A7	25Z5	110-120	60	—	78	—	10" or 12"	Crystal	—	—	No	Combined		—	—	—	—
Continental Radio & Television	Admiral	AW11	540	Yes	6A7	25Z5	110-120	60	—	78	—	10" or 12"	Crystal	—	—	Yes	Yes	No	6½	13	13	16
		CW13	1575	No	12A8GT	70L7GT	110-120	60	—	78	—	10" or 12"	Crystal	—	—	No	Combined		—	—	—	—
Dewald Radio Mfg. Corp.	Dewald	411	550	No	12B8GT	32L7GT	110-120	60	Self Start	78	—	10" or 12"	Crystal	—	—	Yes	Combined		—	—	—	—
Espey Mfg. Co., Inc.	Espey	922	1475-1750	No. 47	6A8GT	25Z6GT	110-120	60	Self Start	78	9	10" or 12"	Crystal	100,000Ω	1½	Yes	Yes	No	6	14	14	10
Galvin Mfg. Corp.	Motorola	11A	1200-1750	No	25A7G		110-120	60	—	78	9	10" or 12"	Magnetic	3,000 @ 400 Cy.	—	No	Yes	No	—	—	—	—
		21A	1300-1750	No	6K6GT	76	110-120	60	—	78	8	10" or 12"	Magnetic	—	—	No	Yes	No	—	—	—	—
		22A	1250-1750	No	6SK7GT	6J5GT	110-120	60	—	78	8	10" or 12"	Crystal	—	—	No	Yes	No	—	—	—	—
		23RC, 23RCW	1250-1750	No	6SK7GT	6J5GT	110-120	60	—	78	8	10" or 12"	Crystal	—	—	No	Yes	No	—	—	—	—
General Electric Co.	GE	GM11	1400-1600	No	12A7		110-120	60	Self Start	78	10	10" or 12"	Crystal	80,000Ω	1½	Yes	Combined		8	15⅛	13¼	10
		HM21	1100-1600	No	6A8G	84	110-120	60	Self Start	78	9	10" or 12"	Crystal	—	—	No	Yes	No	5	10¾	14⅜	9
		JM23	1100-1600	No	6A8G	84	110-120	60	Self Start	78	8	10" or 12"	Crystal	—	—	No	Yes	No	$6\frac{1}{16}$	14⅜	$11\frac{9}{16}$	—
Philco Radio & Television Corp.	Philco	RP1 (Codes 121, 122, 123)	530-580	Yes	6A7	84	110-120	60	—	78	—	10" or 12"	Crystal	—	—	No	Yes	No	—	—	—	—
		RP3	530-580	Yes	6A7	84	110-120	60	—	78	—	10" or 12"	Crystal	—	—	No	Yes	No	—	—	—	—
		41-RP6	530-570	Yes	6A7	84	110-120	60	—	78	—	10" or 12"	Crystal	—	—	No	Yes	No	—	—	—	—
Pilgrim Electric Corp.	Pilgrim	930	—	No	6A7	76	110-120	60	—	78	—	10" or 12"	Crystal	—	—	No	Yes	No	—	—	—	—
RCA Mfg. Co., Inc.	RCA	VA20, VA21	530-625	No. 47	6A7	25Z6G	110-120	60	Manual Start	78	7	10" or 12"	Crystal	100,000Ω	1½	No	Combined		3⅜	12½	8¼	7¼
		Osc. 22	530-625	No	6SA7	25Z6G	110-120	60	—	78	—	10" or 12"	Crystal	—	—	No	Combined		7½	4½	2½	—
Sears Roebuck & Co.	Silvertone	5848	540-700	No. 51	35L6GT	35Z6GT	110-120	60	—	78	8	10" or 12"	Crystal	—	—	No	Combined		—	—	—	—
		6226	540-750	No. T-46	6A7	25Z5	110-120	60	—	78	9	10" or 12"	Crystal	—	—	No	Combined		—	—	—	—
		6233	530-625	No. 44	12A8GT	35Z4GT	110-120	60	Manual Start	78	—	10" or 12"	Crystal	100,000Ω	1½	No	Combined		—	—	—	—
Sonora Radio & Television Corp.	Sonora	KVU-85, KVU-97	600	No	50L6GT	35Z5GT	110-120	60	—	78	—	10" or 12"	Crystal	—	—	No	Yes	No	—	—	—	—
		PBW	—	Yes	6A7	25Z5	110-120	60	Self Start	78	—	10" or 12"	Crystal	—	—	No	Combined		7¼	13⅛	10⅜	7¼
		W17, W19, W24	600	No	32L7		110-120	60	—	78	—	10" or 12"	Crystal	—	—	Yes	Yes	No	—	—	—	—
Sparks-Withington Co.	Sparton	219P, 219PD	1200-1700	Yes	6A7	25Z5	110-120	60	—	78	—	10" or 12"	Crystal	—	—	Yes	Yes	No	—	—	—	—
Stewart-Warner	Stewart-Warner	11-2A1	540-750	No	35L6GT	35Z5GT	110-120	60	—	78	9	10" or 12"	Crystal	—	—	Yes	Combined		—	—	—	—
Warwick Mfg. Corp.	Warwick	9-21	1500-1700	No	6A7	76	110-120	60	—	78	—	10" or 12"	Crystal	—	—	Yes	Yes	No	—	—	—	—
		9-23	1500-1700	No	12SA7	35Z4GT	110-120	60	—	78	—	10" or 12"	Crystal	—	—	Yes	Yes	No	—	—	—	—
Wholesale Radio Service Co.	Lafayette	K21965	540	No	6A8GT	76	110-120	60	Self Start	78	8	10" or 12"	Crystal	150,000Ω	3-4*	Yes	Combined		6½	13	10¾	13
Wilcox-Gay Corp.	Wilcox-Gay	A63	540-750	Yes	12A8, 35L6	25X6	110-120	60	—	78	9	10" or 12"	Crystal	—	—	No	Combined		—	—	—	—
		A65	—	No	12SA7	35Z4	110-120	60	—	78	8	10" or 12"	Crystal	—	—	No	Combined		—	—	—	—
		A95	—	No	12A8	35Z4	110-120	60	—	78	—	10" or 12"	Crystal	—	—	No	Yes	No	—	—	—	—
		8K2	540-750	Yes	6A7	25Z5	110-120	60	Self Start	78	—	10" or 12"	Crystal	—	—	No	Yes	No	—	—	—	—
		8P2	—	Yes	6A8GT	5Z4GT	110-120	60	—	78	—	10" or 12"	Crystal	—	—	No	Yes	No	—	—	—	—
		9A2	540-750	No	12A8	35Z4	110-120	60	—	78	8	10" or 12"	Crystal	—	—	No	Yes	No	—	—	—	—
Zenith Radio Corp.	Zenith	S6622	—	Yes	6L7G	6X5G	110-120	60	—	78	—	10" or 12"	Crystal	—	—	No	Yes	No	—	—	—	—
		S7000, S7001, S7002, S7003	1540	No	12SA7GT	35Z4GT	110-120	60	—	78	—	10" or 12"	Crystal	—	—	No	Yes	No	—	—	—	—
		S8500, S8501	540-900 900-1500	No	12SA7GT	35Z4GT	110-120	60	—	78	—	10" or 12"	Crystal	—	—	No	Yes	No	—	—	—	—

*Infinite Impedance Load

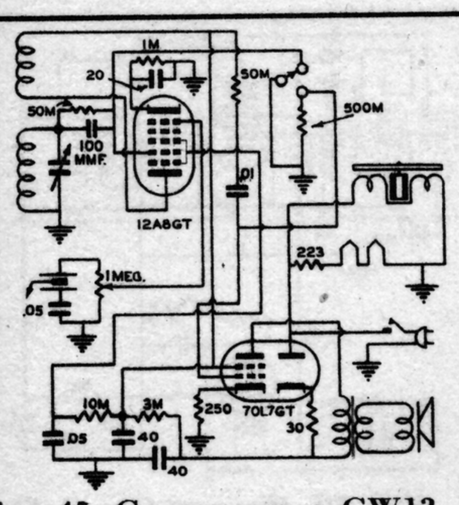

FIG. 45. CONTINENTAL CW13.

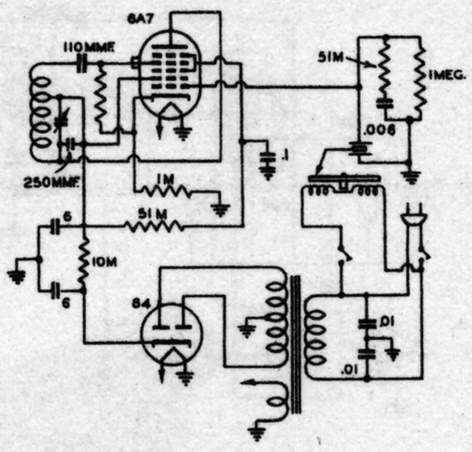

FIG. 50. PHILCO RP1 (122).

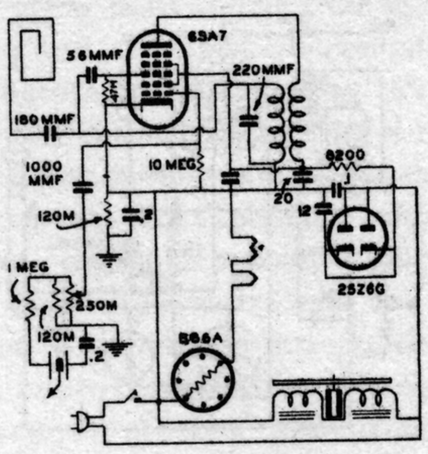

FIG. 55. RCA OSC. 22.

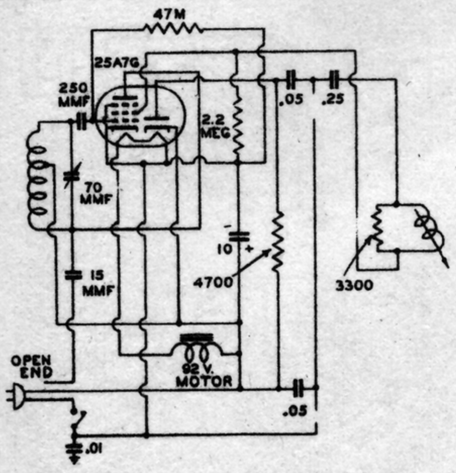

FIG. 46. GALVIN 11A.

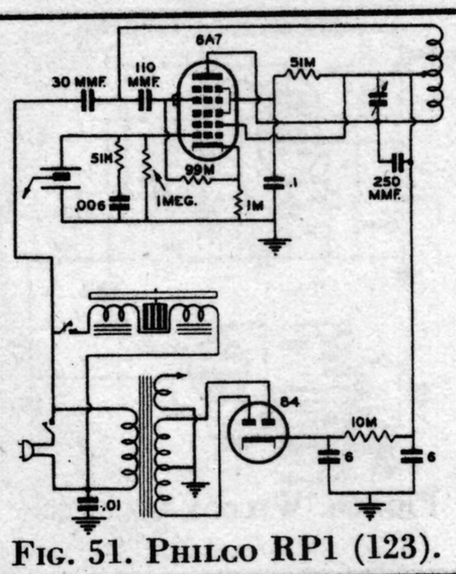

FIG. 51. PHILCO RP1 (123).

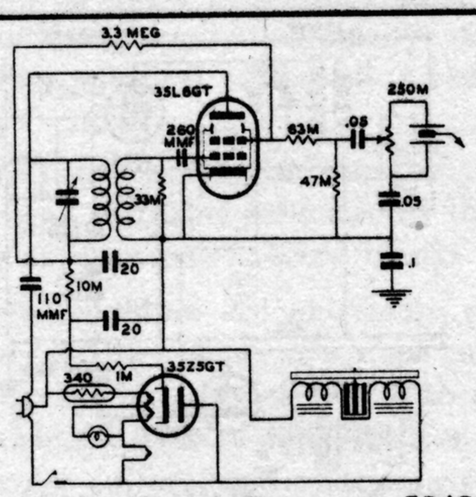

FIG. 56. SEARS-ROEBUCK 5848.

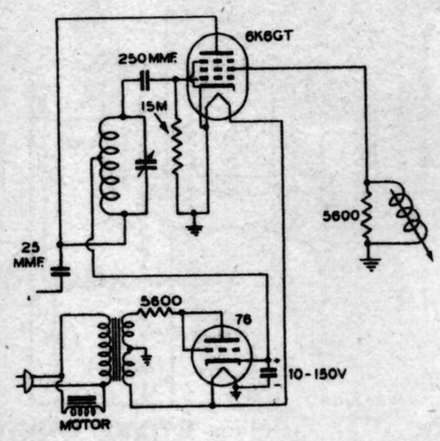

FIG. 47. GALVIN 21A.

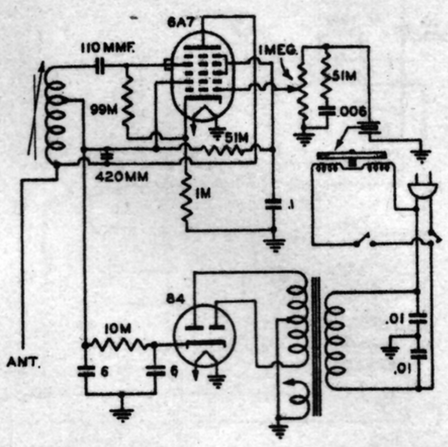

FIG. 52. PHILCO RP3.

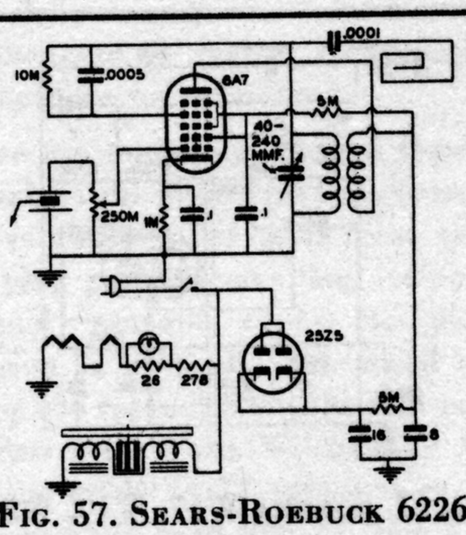

FIG. 57. SEARS-ROEBUCK 6226.

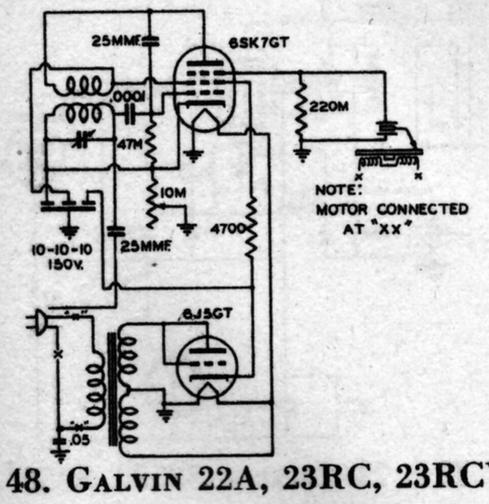

FIG. 48. GALVIN 22A, 23RC, 23RCW.

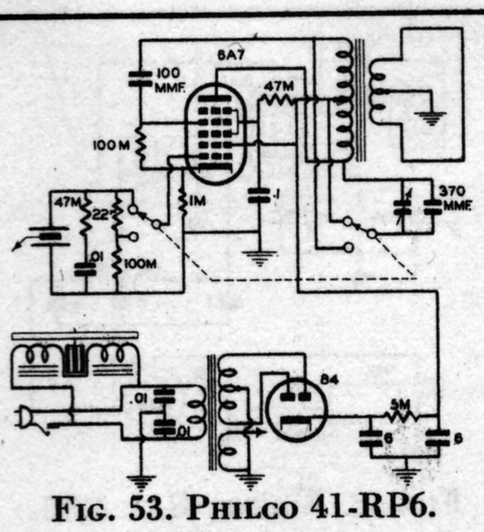

FIG. 53. PHILCO 41-RP6.

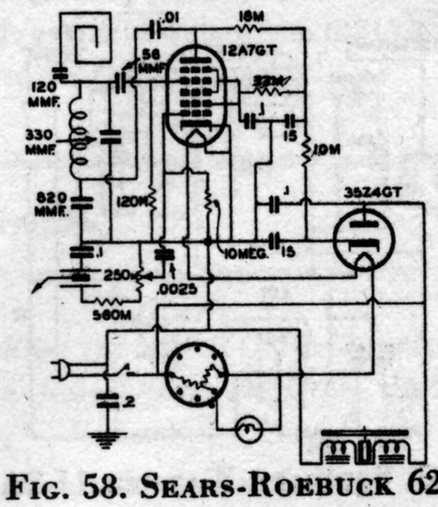

FIG. 58. SEARS-ROEBUCK 6233.

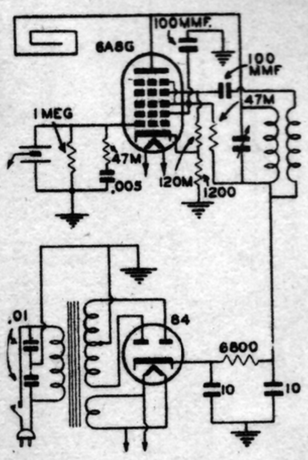

FIG. 49. G. E. HM21, JM23.

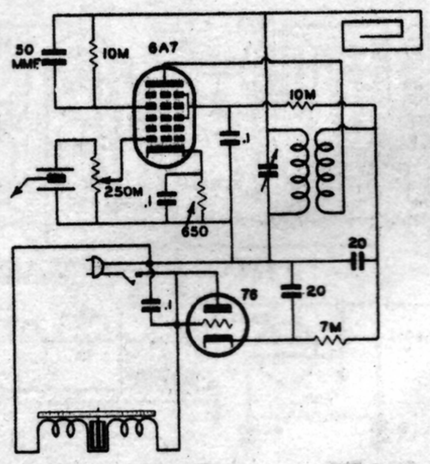

FIG. 54. PILGRIM 930.

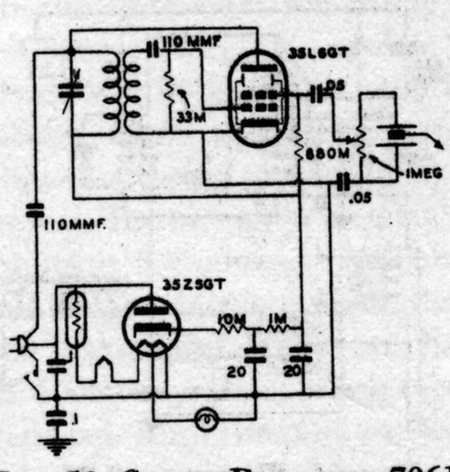

FIG. 59. SEARS-ROEBUCK 7061.

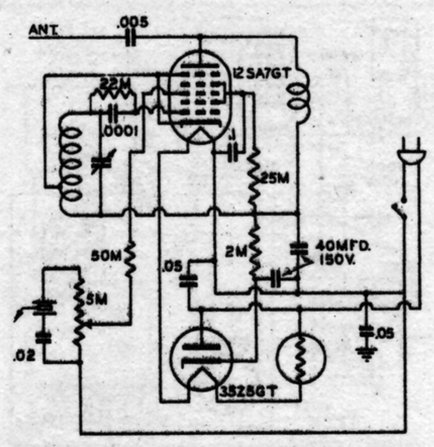

FIG. 60. SEARS-ROEBUCK 7063.

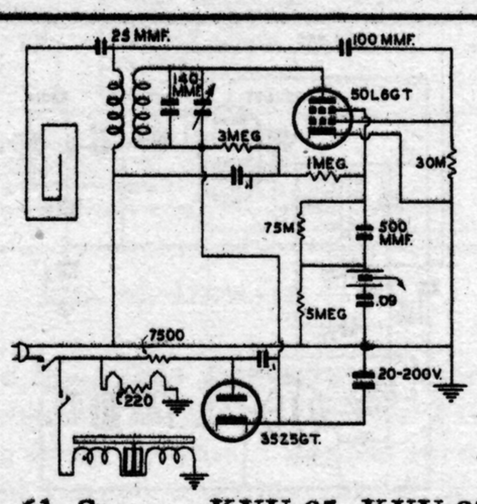

FIG. 61. SONORA KVU-85, KVU-97.

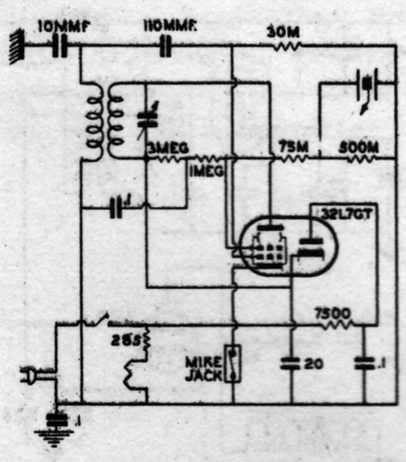

FIG. 62. SONORA W17, W19, W24.

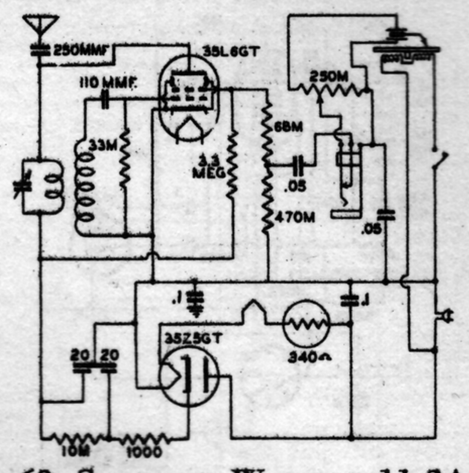

FIG. 63. STEWART-WARNER 11-2A1.

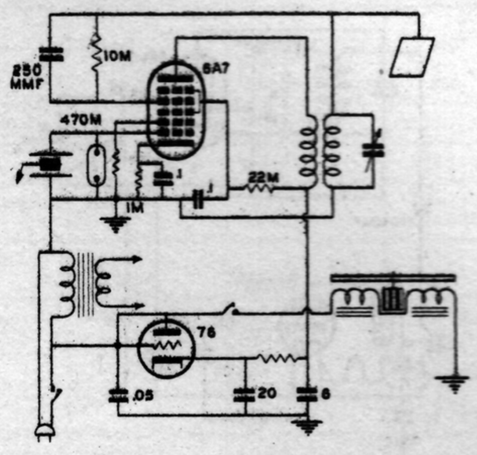

FIG. 64. WARWICK 9-21.

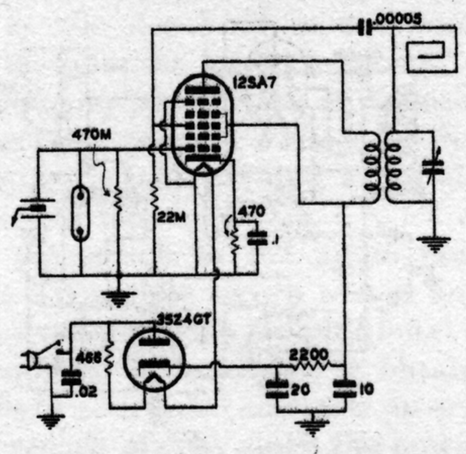

FIG. 65. WARWICK 9-23.

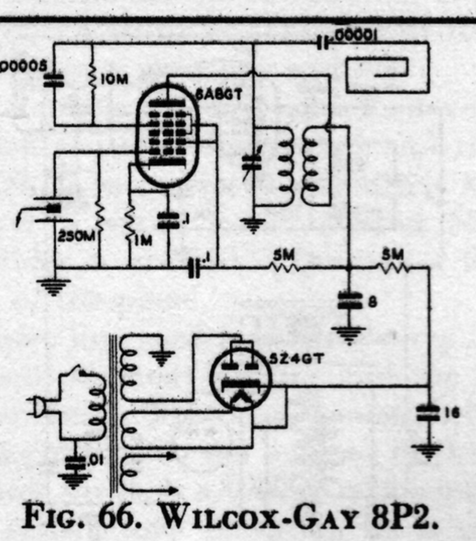

FIG. 66. WILCOX-GAY 8P2.

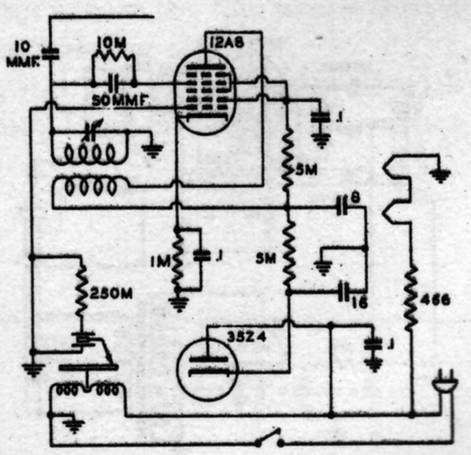

FIG. 67. WILCOX-GAY 9A2.

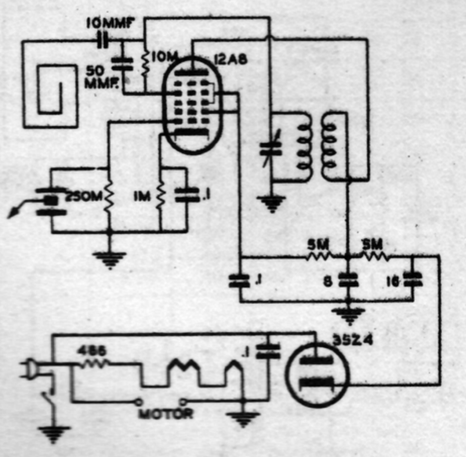

FIG. 68. WILCOX-GAY A-95.

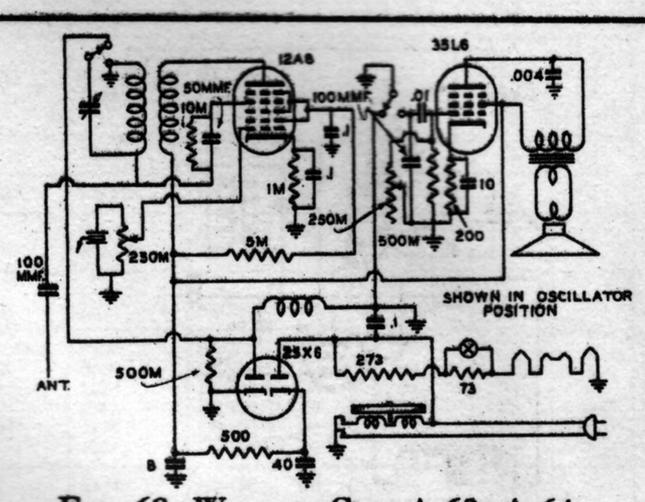

FIG. 69. WILCOX-GAY A-63, A-64.

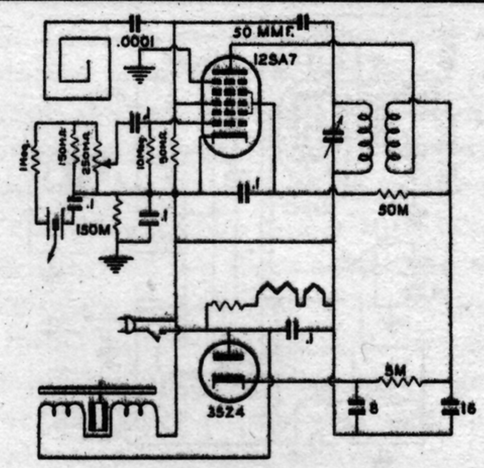

FIG. 70. WILCOX-GAY A-65.

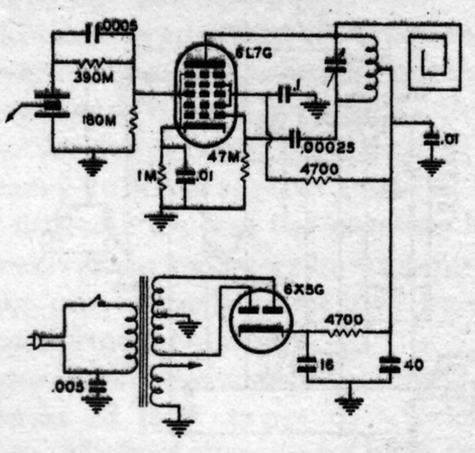

FIG. 71. ZENITH S6622.

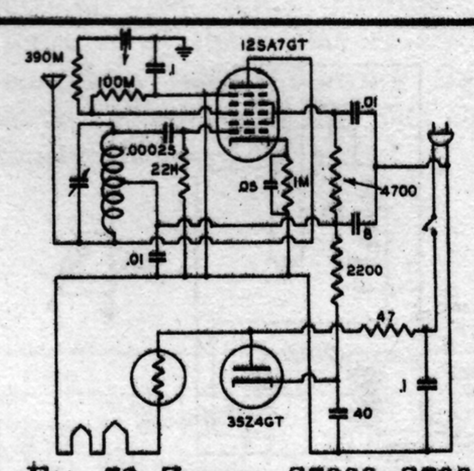

FIG. 72. ZENITH S7000, S7001, S7002, S7003.

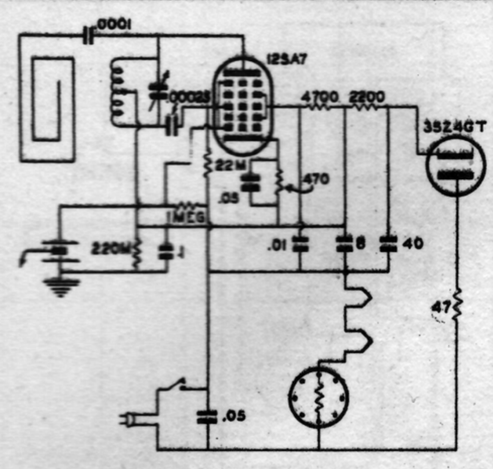

FIG. 73. ZENITH S8500, S8501.

Home Recorders

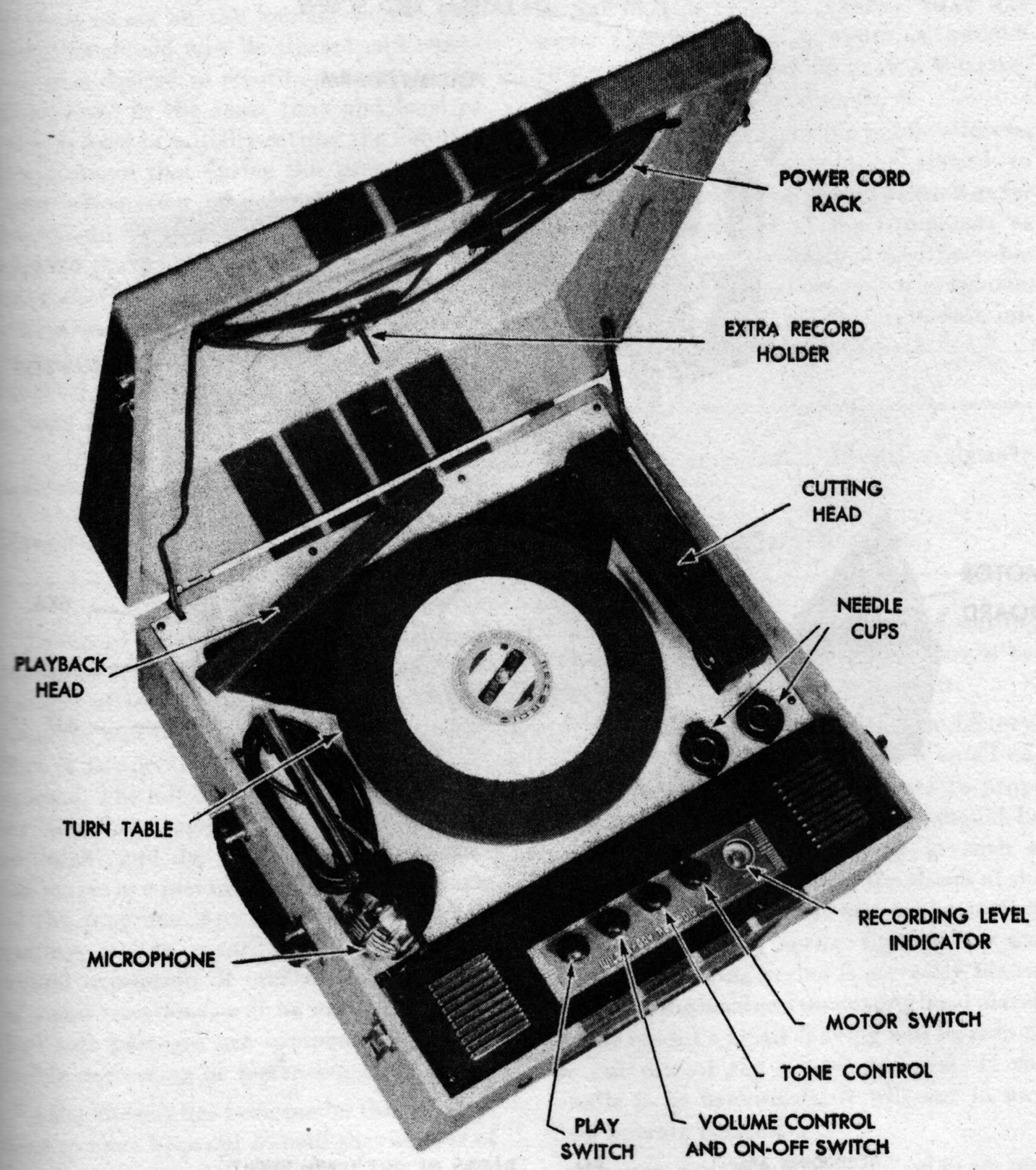

FIG. 74

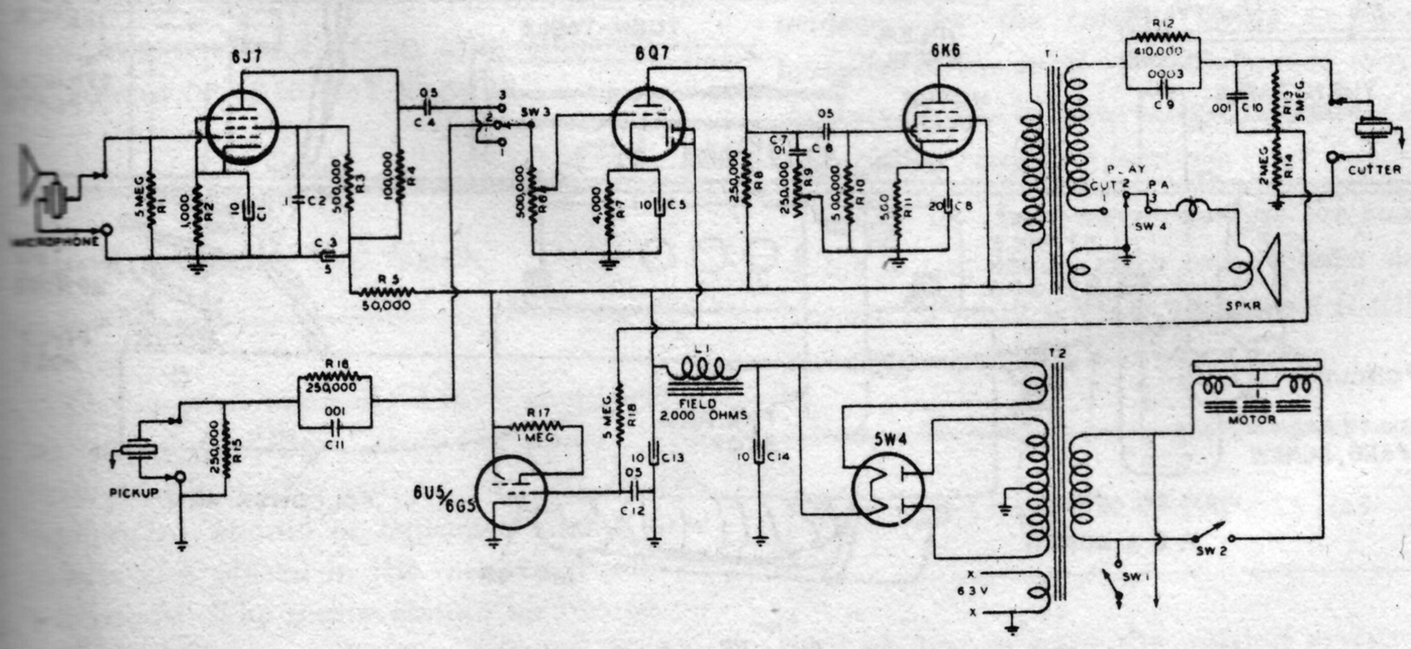

FIG. 75

It has often been noted that in the radio industry and its allied fields, certain features fail to become popular during the season of their introduction. Then, after a number of years of disuse, they are reintroduced with improvements and experience immediate acceptance. Home recording, a feature introduced about eight years ago, has been dormant until the recent introduction of low-priced, improved recording systems. A typical example of this type of unit is the Wilcox-Gay "Recordio."

This unit makes possible the recording of voice or music originating locally, as well as providing a means of recording radio programs.

The appeal of this, and similar types of equipment, is further enhanced by the availability of inexpensive record blanks.

These recorders are extremely popular, not only for their value as a home entertainment device, but also because of their possible uses in the fields of public address, education, voice culture, and personal correspondence.

The following discussion deals with the components of the system, its operation, and the procedure for servicing.

There are numerous general types available such as the phono-player, recorder, and P.A. system; another with these same features plus radio-receive and radio-record; completely portable types, etc. Since this discussion is primarily concerned with recording and reproduction the unit employed for illustration is the Wilcox-Gay Portable Recordio model A-72 pictured in Fig. 74 with schematic as in Fig. 75. The A-72 is of the portable type without radio-receive and record, and was one of the first popular price units to reach the market.

Controls

Viewing the top of the A72 Recordio there will be found four controls, designated as "Play," "Volume," "Tone," and "Motor."

The control labelled "Play" is a selector switch that in its extreme right hand position connects the equipment for public address, in which position anything spoken into the microphone will be heard to issue from the loud speaker in an amplified state—degree of amplification being controlled by the volume control. In the center or play position the equipment is connected for phonograph reproduction, in which condition the recordings that have been made can be played back, and also any phonograph record may be reproduced. Both the tone and amplitude of sound will be controlled by the tone and volume controls respectively. In its left hand position or when the yellow dot is opposite

"cut," the equipment is connected for recording, at which time by following the directions below, a recording may be made.

The control labelled "Volume," is for the purpose of controlling the volume of both recording and playing back records as well as when the unit is used for public address. During the first portion of its clockwise turn it operates the off-and-on switch connecting the power supply to the equipment. Through the remainder of its clockwise turn, the volume is increased.

The control labelled "Tone" is for properly controlling the fidelity or tone of the Recordio. Turned in a clockwise direction the bass notes are emphasized. Turned in a counter-clockwise direction the treble notes are emphasized. THIS CONTROL SHOULD ALWAYS BE IN THE LEFT HAND OR HIGH POSITION WHEN RECORDING. Failure to do this will result in a very poor recording.

The control labelled "Motor" is for starting and stopping the turntable. Turned to the right it connects the power supply and the table will rotate. Turned to the left the supply is disconnected and the table will stop.

Figure 76 shows the Recordio with the escutcheon removed and the motorboard raised to a vertical position. The components to be later referred to under care of the instrument are clearly identified in the illustration.

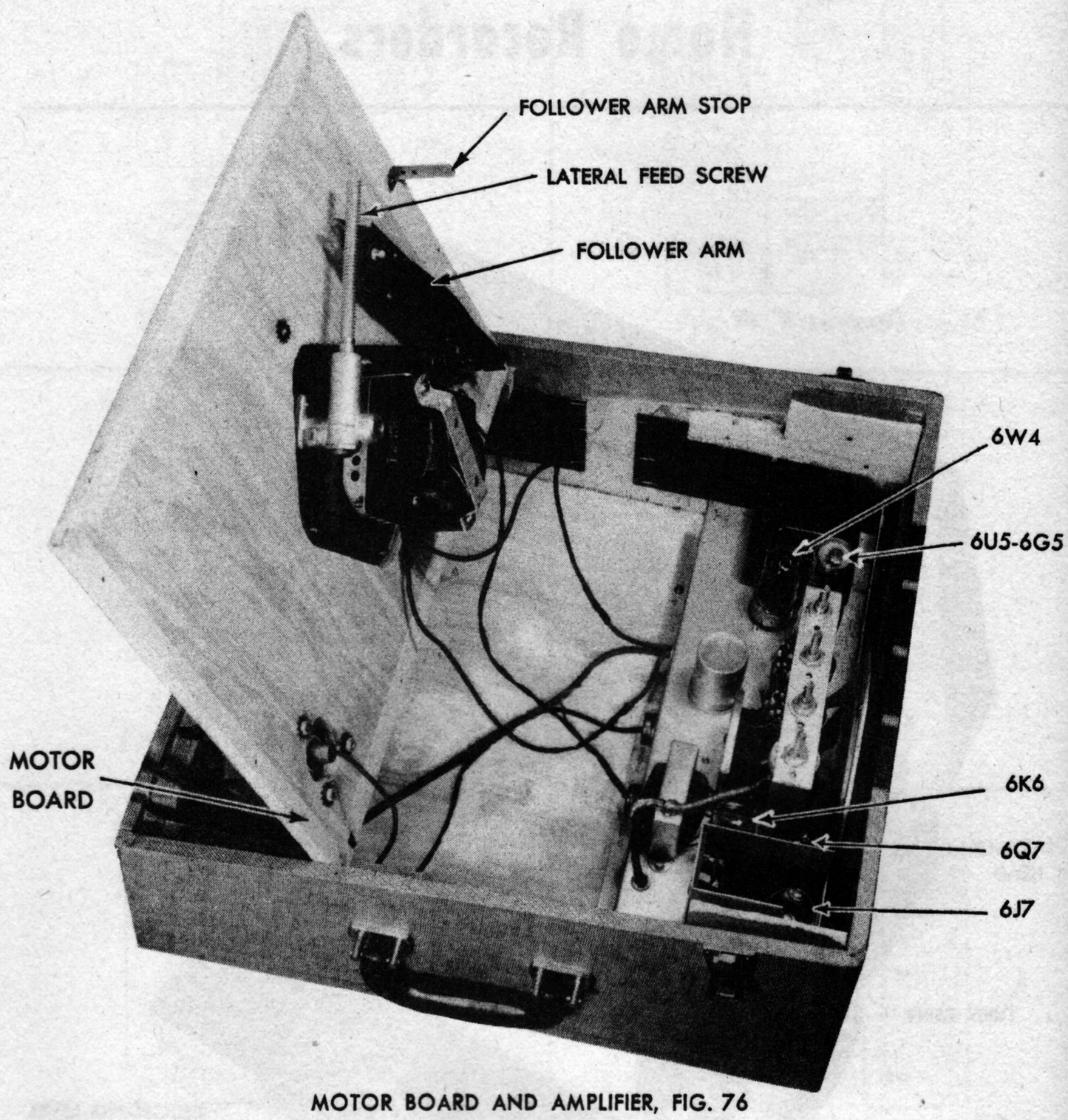

MOTOR BOARD AND AMPLIFIER, FIG. 76

Recording

To use this equipment as a recording mechanism, whereby radio programs and various other activities picked up on the microphone can be preserved on a record, first of all the "Play" control should be turned to "Cut" and a blank record should be placed on the turntable. A small pin is located near the center of the turntable. It will also be noticed that the record blank has three holes in the center. The record should be so placed on the table that the pin engages one of these holes. After this procedure, the cutting arm, which is the arm on the right of the equipment, should be raised up to an angle of approximately 45 degrees and the cutting head swung over so that the cutting stylus will come in contact with the near outside of the record blank when the arm is lowered.

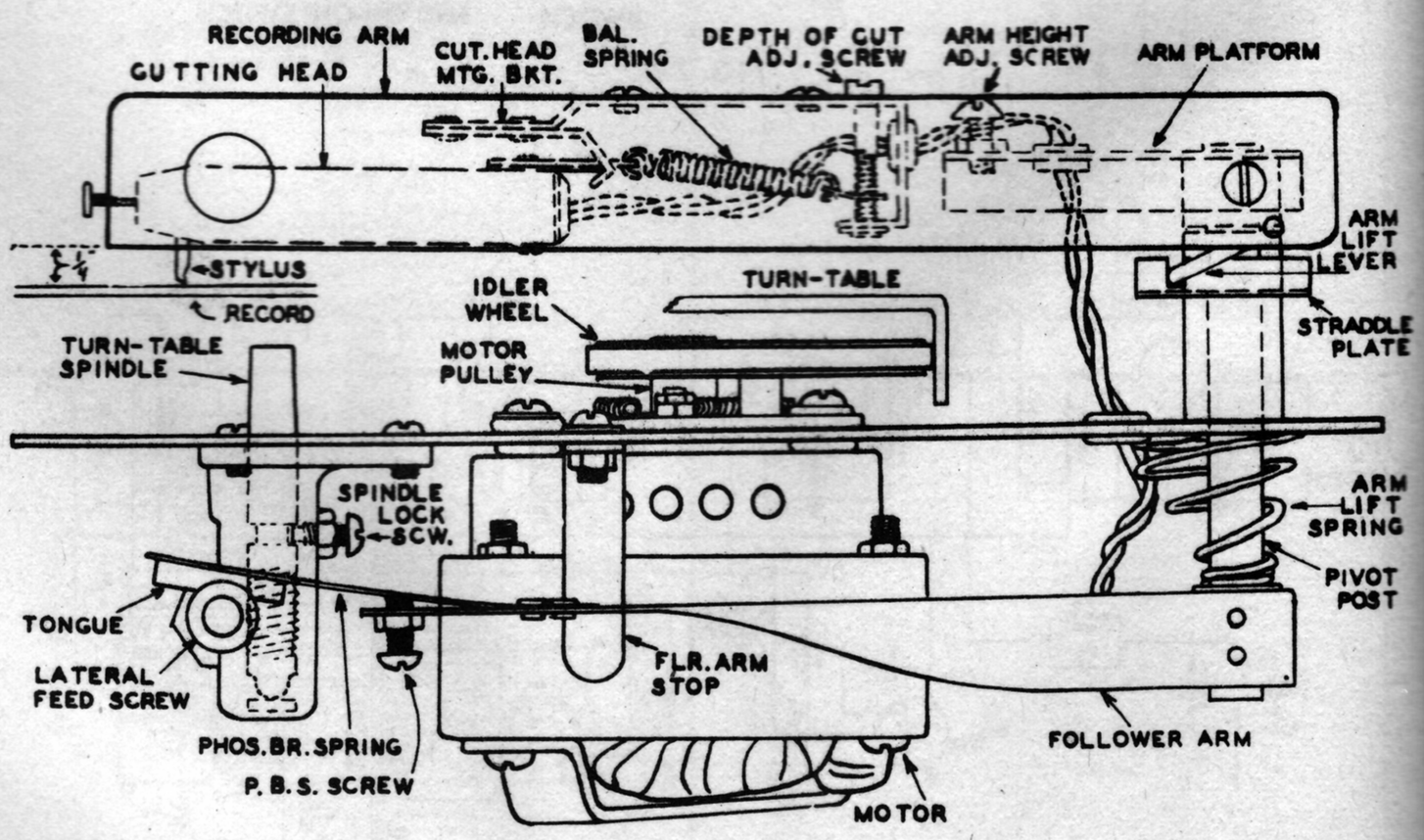

FIG. 77

Recording Microphone

To use this equipment for recording anything that is picked up by the microphone, the control labelled "PA," "Play," "Cut,"

mentioned above should be turned in its left hand direction so that the dot is opposite "Cut." If the microphone is going to be spoken into, a few words should be spoken into it while adjusting the volume. The magic eye should be watched, and the volume should be adjusted so that the magic eye just closes on the loudest words. The turntable should now be started and whatever it is desired to record spoken into the microphone in the same tone and level of voice as used in initially setting the volume. If it is found that during this process some slight adjustment of volume is necessary, this should be done, maintaining an adjustment so that the magic eye just closes. All other efforts, such as speeches, recording of orchestras, bands, etc., should be accomplished by first of all noting and adjusting the level and then turning on the motor and making the record cut.

Recording Radio

To record radio programs, the microphone should be set up directly in front of the loud speaker of the radio receiver supplying the program and the radio receiver adjusted so that it is operating at normally low room volume. The left hand control should be set on "Cut," the tone control should be turned to "high" and the volume adjusted so that the magic eye just closes on the louder parts of the program. Any slight adjustment of volume can be made, however, the individual expression of orchestras, as well as of vocal selections, will be impaired if loud and soft passages are compensated for by either decreasing or increasing the volume.

After the cut has been made, there will be seen to have been cut a small shaving out of the record material. This will pile in the center of the record. The machine is cutting correctly if, after having completely cut a 6½" record, the wadded up shaving has a total diameter of approximately ⅜ to ½ inch. THIS SHAVING IS NOT FLAMMABLE AND THEREFORE THERE IS NO FIRE HAZARD IN DISPOSING OF IT IN ANY MANNER.

Phonograph Play Back

The control marked "Play" should now be turned to "Play," and the phonograph arm, which is the arm at the left of the equipment, should be equipped with a new needle and placed in the outside groove of the record. The motor should be turned on and the volume and tone adjusted by the respective controls. After this procedure the previously recorded material will be repeated. When it is desired to play ordinary phonograph records on this equipment, all that is done is to position the switch to "Play" as above, place the record on the turntable, at which time the pin on the turntable will disappear and allow the record to lie flat on the table. A NEEDLE THAT HAS BEEN USED TO PLAY A REGULAR RECORD SHOULD NEVER BE USED TO PLAY A WILCOX-GAY RECORD. *Use a new needle.*

To use this equipment for public address, the selector switch should be turned to "PA." The microphone should be used as far to the side and rear of the equipment as possible to prevent acoustical feed back between the loud speaker and microphone. There are available 12½ foot extension microphone cords for this equipment.

Cutting Arm and Head Adjustments

Inserting Cutting Stylus

Do not use any other make of cutting stylus than Wilcox-Gay. This stylus is especially designed for this equipment.

When this equipment leaves the factory, the cutting stylus is packed in a small envelope to avoid its becoming lost. To properly install the cutting stylus, it should be pressed into the cutting arm in such a manner that the flat side on the shank of the cutting stylus is in front and is the surface that the retaining screw tightens up on. When the cutting stylus is correctly placed in the cutting head and the cutting head placed on the record a small shaving will be seen to be cut out of the record material. If the needle is in backwards, it will not in any case operate correctly.

Extreme care should be exercised to see that this cutting stylus is held in the cutting arm tightly. Owing to the fact that the cutting stylus is of very hard Norwegian razor steel and that the retaining screw is hardened also, there is a tendency for the cutting stylus to become loosened in the head. It is suggested that the retaining screw be given a little tightening turn each time a recording is made.

Under no circumstances allow the cutting stylus to rest on table top or any other metal because its point is razor sharp and it will be dulled if this precaution is not taken.

Effect of Dull Cutting Stylus

With proper care the cutting stylus will cut dozens of records satisfactorily before being dulled so that replacement is necessary.

Many times it may seem from casual observation that because an incorrect cut is being made, an adjustment is in order to bring about correct depth of cut. Actually the trouble may be due to the cutting stylus having become dulled, either accidentally or through natural wear.

It is well to FIRST TRY A NEW CUTTING STYLUS before making any adjustments, to preclude the necessity for a complete readjustment. Adjustments made with a dulled cutting stylus being used will have very little effect upon the depth of cut.

Depth of Cut

The depth of cut may be observed by holding the record in such a position that a light is reflected from the groove. If the depth of cut is correct, the grooves will appear to be about as wide as the spaces between them.

The correct depth of cut will produce a thread cut from the record surface that is firm, although neither coarse and stiff, nor light and "fluffy."

Provided a new cutting stylus, or one known to be in perfect condition, is being used, the correct depth of cut may be gauged by permitting the cuttings to remain upon the record until completed, then rolling the cuttings into a hard ball. The size of the ball thus obtained should be approximately ⅜ inch in diameter for the 6½ inch record.

The depth of cut is regulated by an adjustment of the flat head screw on the top of the recording arm, Figure 77.

Turning the screw to the right (clockwise) increases the depth of cut.

Turning the screw to the left (counterclockwise) decreases the depth of cut.

Important Notes

Leveling:

To derive the best operation from this equipment, it should be very nearly level in all directions. Because of the fact that many floors are not level, it is suggested that something round, like a round lead pencil, or a marble, be placed on the top of the equipment to test which way it is low. The top may be levelled by shimming the low side. Both the operation of cutting the records and reproducing them will be improved if this precaution is taken.

Groove Jumping with Offset Head:

Some phonograph instruments are equipped with an offset reproduction head.

By this is meant a head that is at an angle to the pickup arm. If it is desired to play records on this type of phonograph reproducing equipment, it is suggested that a minimum internal diameter of 3½ inches be used. Otherwise the needle may have a tendency to jump out of the record groove.

Groove Depth:

In some of the early Recordio models the adjusting screw was threaded throughout its full length, although only the lower portion of the screw over a span of approximately ⅜ inch contributes to the useful range of adjustment. If the adjusting screw is turned in a clockwise direction so as to raise the spring holding lug to the upper threaded portion of the screw, the adjustment will have passed through a "dead-center" position, which will cause a bobbing up-and-down movement of the cutting head.

If it is found that when using a new cutting stylus, the depth of cut is too shallow, and the adjusting screw has been turned to the full clockwise position in the later models, or to the upper limit of the useful range in the older models, this is an indication that the balance spring is too strong. Its tension may be decreased by spreading the coils of the spring with a pair of diagonal cutting pliers.

CAUTION: Care should be used in removing and replacing the cutting head, when occasion arises, so that the balance spring is not stretched to a length that will prevent its returning to normal length and tension.

When the cutting head is in proper adjustment and the recording arm is raised to a position approximately 25 to 30 degrees from the vertical plane, the cutting head should float freely in its mounting, with equal up and down movement. The balance spring holding lug should be in a position on the adjusting screw approximately ¼ inch from the shelf which holds the riveted end of the screw. (Fig. 77)

Observe that the leads connecting to the cutting head are shaped to form an "S," and that these wires are kept in the clear—not touching the balance spring. Also, the wire leads should not be permitted to droop (arm horizontal) so that they will rub on the turntable. Also observe that the holding tongues of the finger grips on the nose of the recording arm are bent back sufficiently so as not to interfere with free movement of the cutting head.

Height of Recording Arm Adjustment

The components of the recording arm assembly are positioned so that the cutting head is parallel, and the stylus is perpendicular to the record surface (Fig. 77), which condition obtains ONLY with the nose of the recording arm adjusted to the correct height of ¼ inch above the record surface.

An adjustable stop (arm height adjusting screw, Fig. 77) is mounted on the arm platform to provide a means for adjusting the height of the recording arm. With a blank record on the turntable and a WILCOX-GAY cutting stylus inserted in the cutting head, the arm height adjustment should be made so that the bottom of the recording arm is ¼ inch from the record surface as shown in Fig. 77.

The connecting wires from the cutting head should not be allowed to double up between the arm and arm platform, but should feed freely through the hole in the platform as the arm is lowered. Otherwise, the doubled up wires may prevent the arm from coming to rest on the head of the height adjusting screw.

There is little likelihood that the arm height adjusting screw will get out of adjustment due to the lock nut becoming loosened. However, there is the possibility that the recording arm may be roughly handled by the operator. If the arm were to be forced backwards after having been raised to its vertical position—or if, while being lowered to its horizontal position to the right of the turntable, the arm were dropped or forced downward, the plate on which all of the recording mechanism is mounted may be bent or sprung slightly. This would destroy the ¼ inch height adjustment, and readjustment of the arm height adjusting screw would be necessary to bring the nose of the recording arm to exactly ¼ inch above the record surface.

Also, the straddle plate (Fig. 77) may be bent down, which would effect the arm height adjustment. In this event, the straddle plate should be removed and straightened. This is most easily accomplished with the recording arm in the lowered position. Grasp the heel of the arm with the left hand and raise the arm horizontally, at the same time removing the arm lift lever from the slots in the straddle plate. The straddle plate may now be removed by sliding it towards the rear.

The importance of the arm height adjustment may be judged by a study of Fig. 77. Note that the balance spring serves to hold the knife-edge pivot of the cutting head mounting fully seated in the "V" shape trunnion bearing of the cutting head mounting bracket. Also, that the "pull" of the spring is slightly downward, as well as horizontal.

The initial tension and length of the balance spring must be such that when adjusted to the proper tension to produce the correct depth of cut, the spring holding lug will be positioned on the adjusting screw as shown, to create a slight downward "pull" on the cutting head mounting.

As the stylus end of the cutting head is raised and lowered slightly, when cutting records which are not perfectly flat, the cutting stylus varies from its perpendicular plane, and the angle of the cutting edges of the stylus also vary. This tends to produce a varying depth of cut which would place a varying load on the motor, resulting in a variation in the average pitch or tone of the recorded music or speech. This effect is commonly called "wow." However, the spring tension, and consequently the stylus pressure, also varies. This variation in stylus pressure opposes the effect of the varying stylus position, resulting in a substantially uniform depth of cut.

It can be seen that if the balance spring were adjusted to a horizontal position with respect to the plane of the cutting head—

(a) The downward "pull" of the spring would be lost, resulting in a pronounced variation in the depth of cut when cutting a record having a slightly warped surface.

(b) The cutting stylus would have a tendency to chatter or dig into the record, due to the "dead-center" position of the spring.

It can also be seen that if the arm were adjusted to an incorrect height above the record surface, the cutting stylus would not be perpendicular, and the tendency towards a greater variation in the depth of cut, which would be more pronounced, would not be fully compensated by the counteracting effect of the varying tension of the balance spring.

Record-Changer Service Data

Supplement No. 5 to the 3rd Edition Mallory Radio Service Encyclopedia, published in February of 1940, contained complete service material on Capehart, Farnsworth, Garrard, Magnavox, R C A, and Webster record changer equipment current at that time. It was the first step taken in the direction of supplying data on all types of changers for use by the radio servicemen in this somewhat puzzling, but rapidly expanding and lucrative phase of radio receiver maintenance.

The field has grown tremendously, with wider application of mechanisms then in use, and the introduction of new or improved changer systems. A really comprehensive treatment of service operations on all models now existent would entail a large volume on the subject of changer systems. We are happy to say that Mr. John F. Rider has certainly fulfilled this requirement with his excellent book "Automatic Record Changers and Recorders." For all those servicemen actively engaged or desirous of entering the record changer maintenance field Mr. Rider's book is a "must."

The response to publication of the changer section of Supplement No. 5 was so enthusiastic, and the number of requests for reprints so large that we are including this material in this Technical Manual. Many of the types are basic, so that the service material can be used for later models. However, on mechanisms not covered, we respectfully refer you to Mr. Rider's book just mentioned.

Capehart — Model 16-E De Luxe Record Changer

1. To Locate and Adjust the Record Tray. (6687) (Fig. 83). In assembling the record changer, the first tooth of the driver quadrant (3551) (Fig. 82) should mesh with the second tooth of the driven quadrant of the tray as shown.

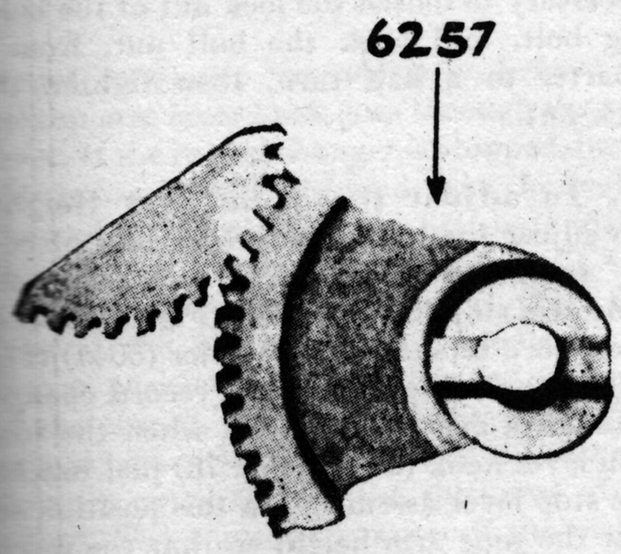

With the two gears properly meshed, loosen the Allen set screws which hold pins No. 34133, Fig. 78, in place. This will allow you to move the record tray sidewise, adjust tray sidewise until the turntable spindle is exactly in the center of the 10″ record level of the record tray. (The 10″ record level is that part of the tray where the felts No. 4913 are indicated in Fig. 83.)

With the control lever in the "one side" position, run the record changer through its cycle until the large hole in the main cam is exactly half way past the upper edge of the record tray cam follower, as shown at No. 82, Fig. 1. At this position, the points of the ten-inch felts (4913) (Fig. 83) should be level with the top of the turntable felt. If this tray is too low or too high, it may be adjusted to the proper level by loosening the eccentric screw (3237) (Fig. 78) No. 4 and turning this screw until the proper level is obtained. Be sure to tighten the lock nut after adjustment.

If the tray is too high, at this position, the ten-inch records will not be centered over the turntable spindle. If the record tray is too low, the ten-inch records will slide out over the ten-inch tray shoulder and not properly center.

2. The Adjustments of the Record Magazine. Before attempting to adjust the magazine, be sure that the center of the magazine pivot pins (34132) (Fig. 78) is $8\frac{3}{8}$″ above the base plate. This height is very important and we recommend checking the height of the right hand pin, when looking at the magazine, before any adjustments are made.

The record magazine is positioned by moving it sideways on its bearing or pivot pins. The two set screws underneath the pivot pins lock the magazine in position. Loosen these set screws, then see that the left hand side of the record reverse assembly fork (part of 6228, Fig. 83) is between $\frac{1}{32}$″ and $\frac{1}{16}$″ inside the left hand side of the Reverse crank, when looking at the magazine. That is, the left hand edge of the record reverse fork is about $\frac{1}{32}$″ or $\frac{1}{16}$″ to the right of the left hand edge of the crank. After moving the magazine, lightly set up the set screws. Then with the selector arm in the "Repeat" position swing the record reverse arm around in front of the magazine, to see whether the record guide strikes either of the record support pins (34138) (Fig. 83). If the guide strikes either of the support pins it will be necessary to bend the pin away from the guide so they can not strike. If it is necessary to bend either pin, set the control lever in the "Repeat" position, then raise the record tray by hand, with a 10″ record on it, observing the way the record strikes the support pins, the record should hit both pins about $\frac{1}{16}$″ from the end of the pin; if it does not it will again be necessary to adjust the pin until the record hits both pins an equal distance from the ends. If it is necessary to bend the pins, check the clearance between the record guide arms and the pins and between the arm carrying the record guide and the right hand pin. Also if the magazine has been shifted it is necessary to see that the two points, which extend downward from the magazine, have ample clearance in the channels, in the record tray, which are provided for their passage. If there is possibility of the points striking it probably means the magazine has been shifted too much.

If the magazine has been adjusted, it is also necessary to see that the record separator hook (6226) (Fig. 78) does not bind in the slot in the end of the record separator arm (6445) (Fig. 83). If it does the section covering these parts gives the adjustment.

3. Magazine Stop Screw. The magazine stop screw No. 2, Fig. 82, should be adjusted so that the crank pin (part of 6230, Fig. 78) is approximately $\frac{1}{16}$″ from the edge of the record reverse arm fork (part of 6228, Fig. 83) which is furthest from the magazine, when the record reverse guide is in front of the magazine, that is, in the reversing position.

4. Magazine Link Adjusting Screws (No. 2) (Fig. 78). The record magazine should always come back snugly against the magazine stop screw, No. 2, Fig. 82. If it does not, it is necessary to loosen the two set screws (No. 2, Fig. 78) to a sliding tension and run the record changer through a cycle of change. When the magazine has reached the horizontal position, as shown in Fig. 78, press down on the lower end of the magazine; this will lengthen the link assembly. Then when the magazine returns to its normal position, the magazine link will adjust itself so that the magazine is snugly against the stop screw. Then tighten the magazine link screws.

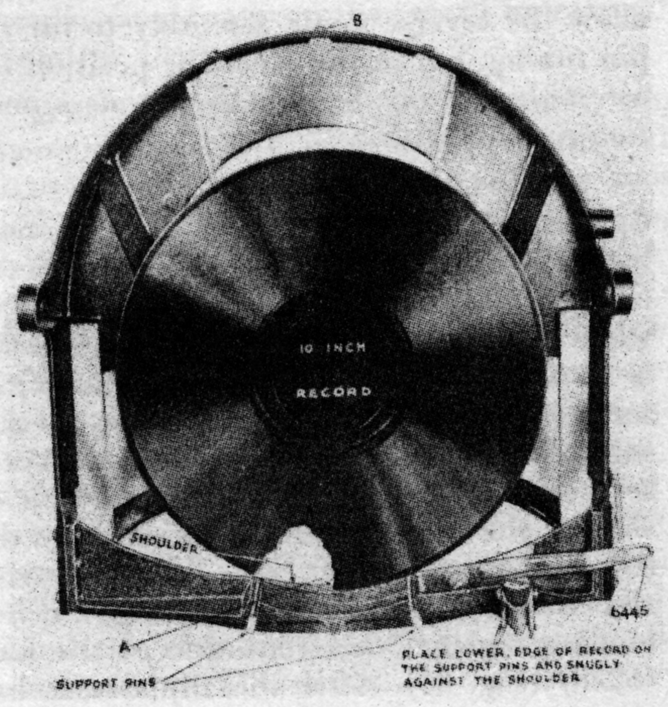

Fig. 78

2722 Switch AC Line
3059 Escutcheon Plate Off-On
3237 Shoulder Screw—Record Tray Slide
3982 Spring—Separator
4018 Main Shaft Bushing
4020 Record Magazine Bushing
4719 Magazine Link Upper
4720 Magazine Link Lower
4925 Record Tray Shield Felt—Outer
5044 Stop Lever Roller Tubing
5658 Pickup Arm Lever Hook
5765 Pickup Cover
6178 Chassis Plug
6226 Separator Hook and Arm Assembly
6228 Record Reverse Arm and Fork Assembly
6230 Reverse Pinion and Crank Assembly
6693 Record Bumper Guide and Felt Assembly
34132 Pin—Magazine Pivot
34133 Pin—Record Tray Pivot
34147 Pin—Record Tray Slide
43159 ¼"—28 Hex. Cap Nut
43160 Lock Nut for Pivot Screw
64197 Pickup Arm Stop Lever Assembly (Specify color).
66254 Steering Arm Assembly.
6—32x⅝" Pickup Stop Lever Screw

NOTE: In ordering any part that is painted, please specify color wanted.

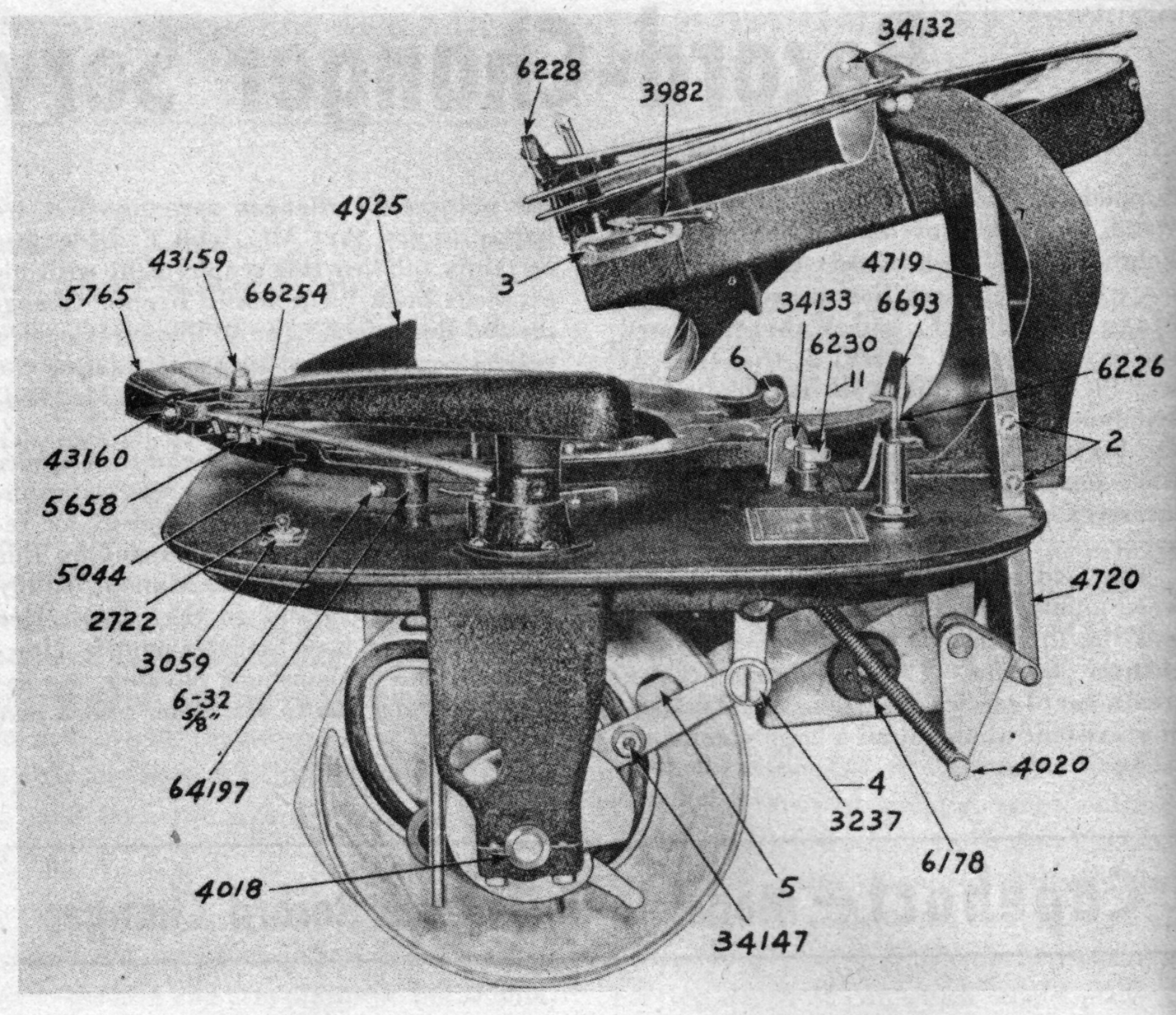

5. Record Reverse Guide (6444) (Fig. 83). With a 12" record in the magazine the record reverse guide assembly (6444) (Fig. 83) should be parallel with the record when in the reversing position, in front of the magazine.

If the record reversing assembly is parallel with a 12" record as above, it should come around and lay against the reverse guide pin tubing (34134) (Fig. 83), if the eccentric cam (3825) (Fig. 85) is properly adjusted. This cam can be adjusted, by loosening the screw through the cam and turning it so that the record reversing assembly returns to the reverse guide pin tubing. Care should be taken when making this adjustment so that the crank pin (part of 6230, Fig. 78) does not hold the reverse guide away from the pin tubing. This cam should be turned so that the reverse guide assembly just touches the pin tubing; if the cam is turned too far it will allow the reverse guide assembly to hit the pin tubing, but in the reversing position the assembly will not be able to assume a position parallel with a 12" record.

6. Reverse Assembly Link Rod. Loosen lock nut No. 9, Fig. 80, while the record changer is in the reversing position, that is, when the reversing assembly (6444) (Fig. 83) is in front of the magazine. Remove the screw (3241) (Fig. 85) holding the reverse segment link (34141) (Fig. 85) to the reverse segment (3550) (Fig. 85) and lengthen or shorten the link, by the link thread until the reversing crank (6230) (Fig. 78) stands with the crank pin just barely touching, but not binding, against the front side of the fork (6228) (Fig. 83). After the adjustment has been made, lock the link in place with the lock nut No. 9, Fig. 80.

7. Record Separator Adjustment. The separator stop No. 3, Fig. 78, should be adjusted so that a small 10" record will positively clear the knife portion of the separator lever as shown in the following illustration. A standard to use is to make certain that there is approximately $\frac{1}{32}$" clearance between the edge of the small record and the point of the separator lever, as shown at "A" in illustration below. However, it may be necessary to vary one way or the other from this measurement, depending on whether or not the slotted end of the record separator lever goes over the hook (6226) (Fig. 78) without binding.

8. Record Separator Hook Adjustment. After adjusting the record separator it will be necessary to check the record separator hook (6226) (Fig. 78) to see that it enters the slot in the record separator without binding. This hook is threaded and by loosening the locknut the hook can be turned in either direction, to raise or lower it. After the correct adjustment is obtained, tighten the locknut.

It should never be necessary to change these adjustments on record changers unless they have been tampered with by an inexperienced person.

9. Separator Hook and Arm (6226) (Fig. 89). Be sure set screw No. 10 in Fig. 85 is screwed all the way in.

10. Record Magazine Bushing (4020) (Fig. 78). If a ringing noise is heard while the instrument is changing records, i.e., such a noise that might be made by a spring, it will be found that the Durex bushing (4020) (Fig. 78) is too tight, in which case it will be necessary to loosen the lock nut of the holding bolt, and back the bolt out, from a quarter to a half turn, then tighten the lock nut.

11. To adjust the Tone Arm Height. To adjust the tone arm height, first place a 12" record on the turntable and adjust the tone arm stop lever (64197) (Fig. 78) so that the record hits the rubber roller (5044) (Fig. 78) in the center. Start the record changer through a cycle and stop it when the tone arm lever hook (5658) (Fig. 78) just touches the stop lever assembly. In this position adjust the tone arm height so that the top of the stop lever is the same height as the center of the hook. This adjustment is made by loosening the two Allen set screws at the rear of the tone arm. These Allen set screws are accessible by raising the tone arm by hand. After making the height adjustment it is necessary to make certain that there is a clearance of approximately ⅝" between the pickup head and the record tray. This distance may be checked between the bottom of the record tray and the bottom of the pickup when the record tray is approximately parallel with the pickup.

12. To adjust the Pickup Elevation. When the tone arm swings in towards the record, the pickup arm lever hook (5658) (Fig. 78) comes to rest against the pickup arm stop lever (64197) (Fig. 78) and when the tone arm lowers the pickup toward the

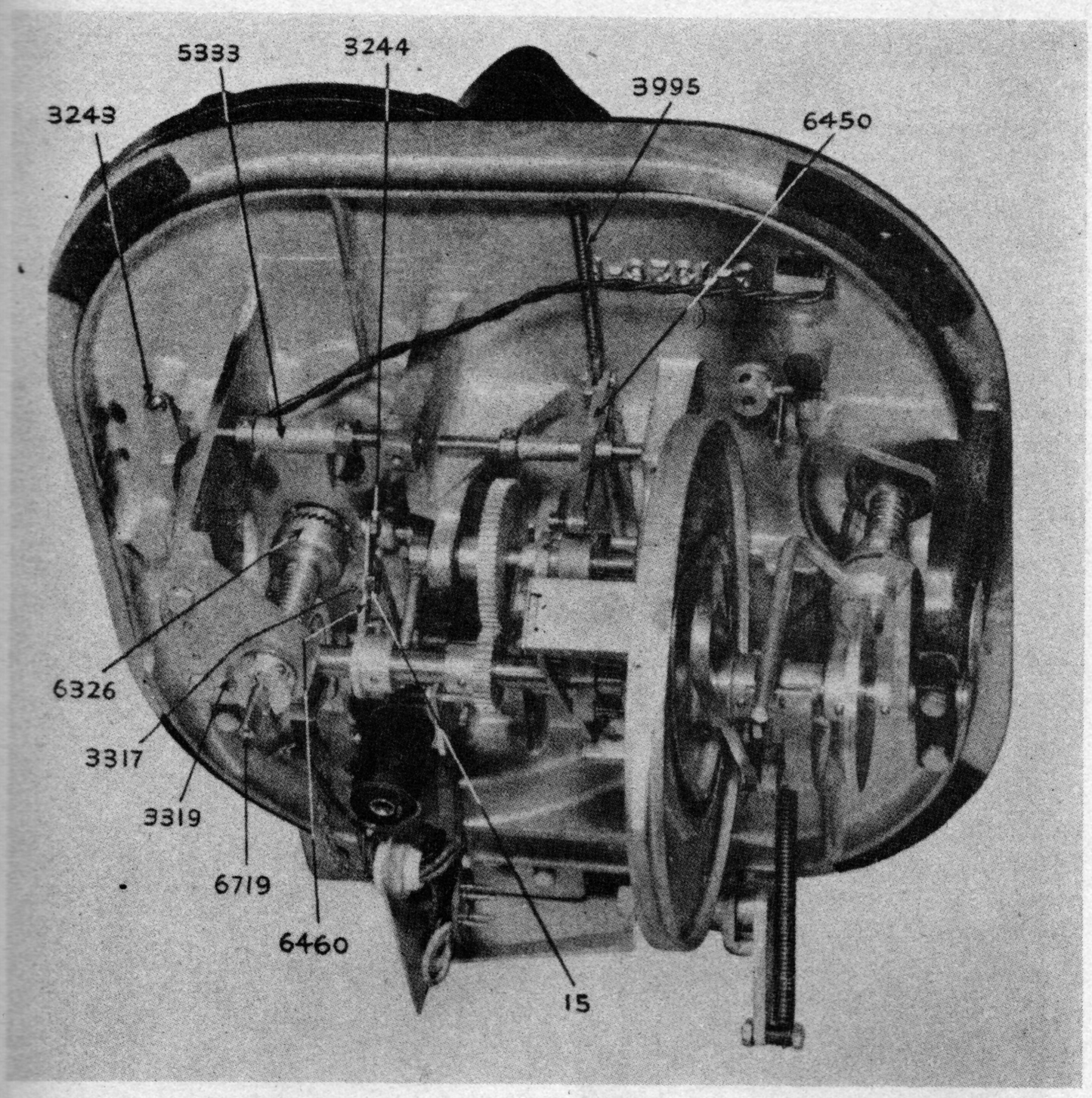

Fig. 79

3243 Shoulder Screw—Repeat Lever
3244 Shoulder Screw Clutch Throwout Lever
3317 Screw—Clutch Throwout Cam
3319 Screw—Turntable Shaft Collar
3995 Spring—Reverse Arm
5333 Main Clutch Fork Lever
6326 Worm and Bushing Assembly
6450 Reverse Cam Arm and Roller Assembly
6460 Clutch Throwout Lever and Spring Assembly
6719 Turntable Drive Shaft Assembly

record it pauses momentarily before the pickup arm lever hook goes through the stop lever. If the record changer is stopped during this pause, it will be found that the ball in the end of the pickup arm lift shaft (6457) (Fig. 86) is at the point marked "L" in Fig. 86 on the lift cam (6449) (Fig. 86). Now if the pickup, with a needle in the proper position, is moved beyond the edge of the record, the point of the needle will extend below the top surface of the record a distance equal to half the thickness of the record. The correct elevation of the pickup is made by the screw in the underside of the tone arm fork against which the pickup cover rests. Loosen the locknut, adjust the screw to bring the needle to the position mentioned above, then lock the locknut.

13. Pickup Feed in Adjustment. The collar of the pickup arm swing lever and collar assembly (6232) (Fig. 86) should ride on the leather facing of the friction cam (6691) (Fig. 87) until the pickup arm lever hook (5658) (Fig. 78) has engaged the stop lever (64197) (Fig. 84). Then a slight amount of friction should be maintained after the ball at the end of the pickup lift arm (6457) (Fig. 86) has engaged with the lift cam (6449) (Fig. 86). This friction should be maintained until the needle has touched the record, otherwise the pickup arm may move away from the stop lever and the needle miss the record. If the friction be maintained too long the needle may be forced beyond the first playing groove. To adjust this, the pin locking the friction cam to the main cam shaft should be driven out and the Allen set screw loosened to a sliding tension. The cam is rotated forward, in the direction of rotation of the main cam shaft, to maintain the friction a longer time and backward to maintain it for a shorter time.

14. To Adjust the Pickup. After removing the pickup cover, it should be noted whether the stylus (5610) (Fig. 87) is centrally located in respect to the pole pieces (569) (Fig. 87). To center the stylus loosen the locknuts (99-11-1) (Fig. 87), then loosen the two headless set screws (99-28-3) (Fig. 87). These set screws hold the spool assembly (6711) (Fig. 87). The spool assembly should be shifted until the stylus is centralized with the pole pieces, then tighten the set screws carefully, so as not to crack the spool, then tighten the lock nuts.

If for any reason it is necessary to shift the pole pieces, which are held to the back by two screws, the two set screws holding the spool should be loosened before attempting to move the pole pieces. If any adjustment of pole pieces is made, carefully check the centering of the stylus before replacing the cover by means of its three screws.

15. To Adjust the Stop Lever Hook (5658) (Fig. 78). Always adjust the tone arm position on a 12″ record before adjusting for a 10″ record. Adjust the tone arm stop lever hook (5658) (Fig. 78) by moving it in or out. This hook is locked in place by a set screw in the stud whose nut is shown in Fig. 78 as No. 43159. This set screw is at the bottom of this stud. Adjust the hook so that it will pass through the notch in the pickup arm lever (64197) (Fig. 78) without binding against the top or bottom of the notch, when in the playing position. With a 12″ record on the turntable, the rubber roller (5044) (Fig. 78) against the edge of the record and the stop lever hook (5658) against the blade of the stop lever (64197) the needle should stop on the record exactly $\frac{3}{32}$″ from the edge of the record.

With the record changer in exactly the same position as described above, and with a 10″ record on the turntable and the hook (5658) (Fig. 78) against the blade, the stop lever should allow the needle to stop on the record $\frac{3}{32}$″ from the edge of the 10″ record. A 6-32 screw shown in Fig. 78 is provided for making this adjustment, simply by screwing it in or out. A check should be made for clearance between the roller and the tray, this roller should never bind on the record tray. This can be taken care of by slightly bending the tone arm stop lever (64197) (Fig. 78) up or down. If it is necessary to bend the stop lever it will be necessary to readjust for 12″ records.

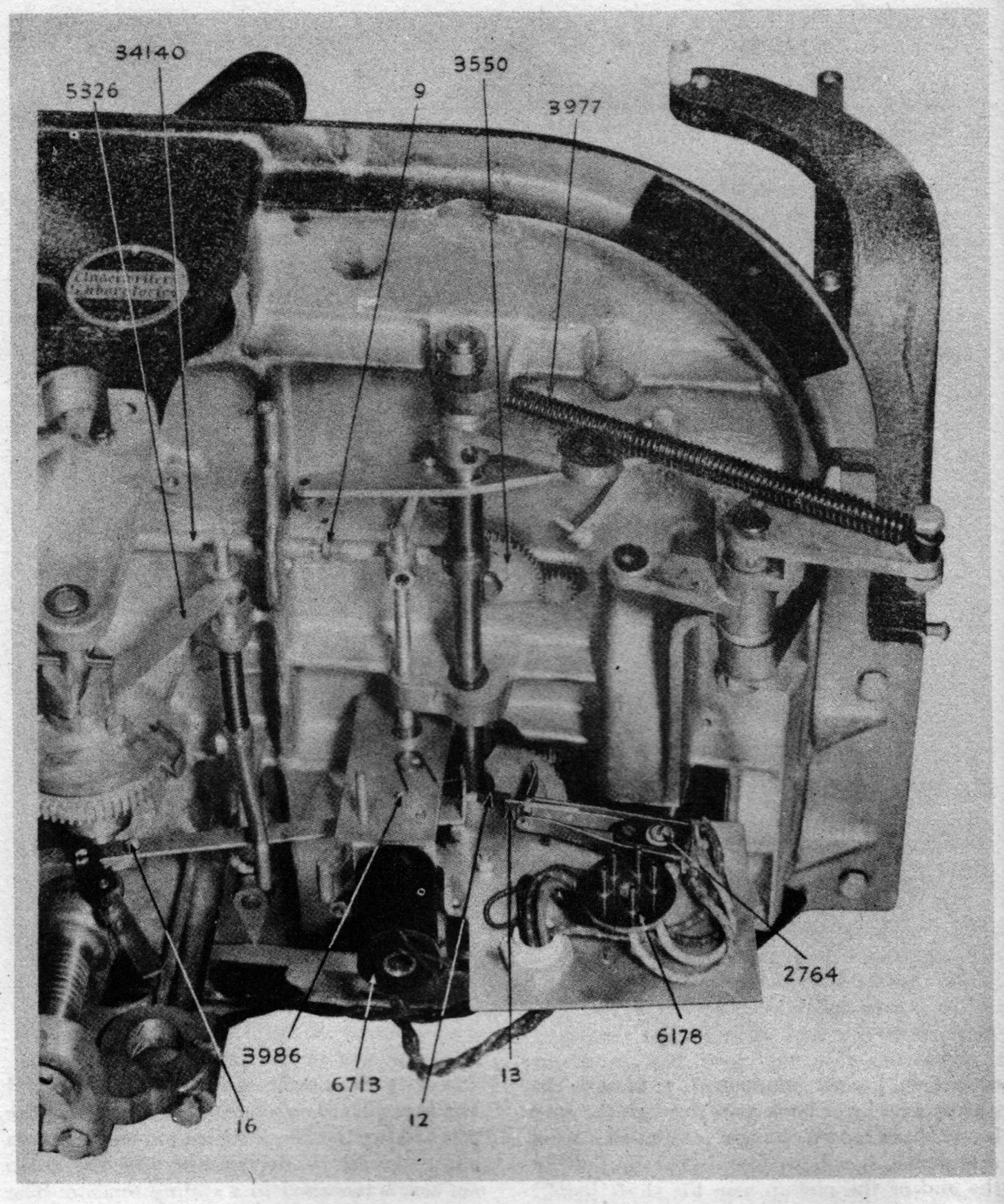

Fig. 80

2764 Switch Assembly—Solenoid and Motor
3550 Record Reverse Pinion Segment
3977 Spring—Magazine Slide Arm
3986 Spring—Solenoid Lever Torsion
5326 Record Reverse Cam Shaft Lever
6178 Chassis Plug 5 Prong
6713 Solenoid Assembly
34140 Pin—Long, Reverse Segment

16. To Adjust the Clutch Throwout Lever and Cam. The clutch throwout lever cam is shown at 15 in Fig. 79 and is adjusted by loosening the shoulder screw (3317) (Fig. 79) to a sliding tension after the record changer has been stopped in the playing position. The clutch throwout lever cam should just clear the point of the turntable throwout cam (6448) (Fig. 87) with the clutch disengaged. Unless clearance between the turntable throwout cam and the clutch lever throwout cam is maintained the record changer will jam. If too much clearance is allowed the turntable throwout cam will not disengage the clutch and the record changer will continue to change records without playing them.

17. To Adjust Solenoid Wedge Spring. This phosphor bronze spring is located on one of the three spacers used to mount the solenoid plate bracket to the solenoid bracket. It is used to prevent clutch chatter or bounce when the clutch engages. The only adjustment is to bend the spring to a snug fit with a long screw driver so as to increase or decrease its pressure on the solenoid to clutch lever (6455) (Fig. 88).

18. To Adjust the Reverse Cam Shift Lever (5326) (Fig. 82). This lever is moved by the record control shaft (3724) (Fig. 89) and is held in position by an Allen set screw. It should be positioned on its shaft so that the record reverse cam (6325) (Fig. 81) is firmly engaged with its pin (34144) (Fig. 85) in the "Both Sides" position. In the "One Side" and "Repeat" positions it should have good clearance with the pin. If any adjustment of this lever is made be sure to check the setting of the Reverse Cam Arm and Roller Assembly (6450) (Fig. 85) as instructed in Section 7 of the instructions on replacing a reverse cam.

19. To Adjust the Record Repeat Lock Lever (5334) (Fig. 89). The purpose of this lever is to prevent accidental shifting of the Selector Arm while the instrument is not in the playing position. In the "Repeat" position this lever is on the side of the Solenoid to Clutch Lever (6455) (Fig. 88) away from the main cam. In the "One Side" and "Both Sides" positions it is on the main cam side of the solenoid to clutch lever. With the tone arm in the playing position (Main Clutch Disengaged) this lock lever should clear the solenoid to clutch lever by approximately $\frac{3}{16}''$ when moved under it.

20. To Adjust the Reverse Cam Lock Lever (5339) (Fig. 89). This lever should be on the main cam side of the solenoid to clutch lever when in the "Both Sides" position. And on the opposite side when in the "One Side" and "Repeat" positions. With the main clutch disengaged the lock lever should clear the solenoid to clutch lever by approximately $\frac{1}{16}''$ when moving under it.

21. To Adjust Reverse Cam Arm and Roller Assembly (6450) (Fig. 81). See Section 7 under Instructions for Replacing a Reverse Cam.

22. To Adjust Record Repeat Throwout Lever (4663) (Fig. 89). No adjustment of this part is necessary.

23. To Adjust Record Repeat Clutch Lever (5332) (Fig. 89). The adjustment of

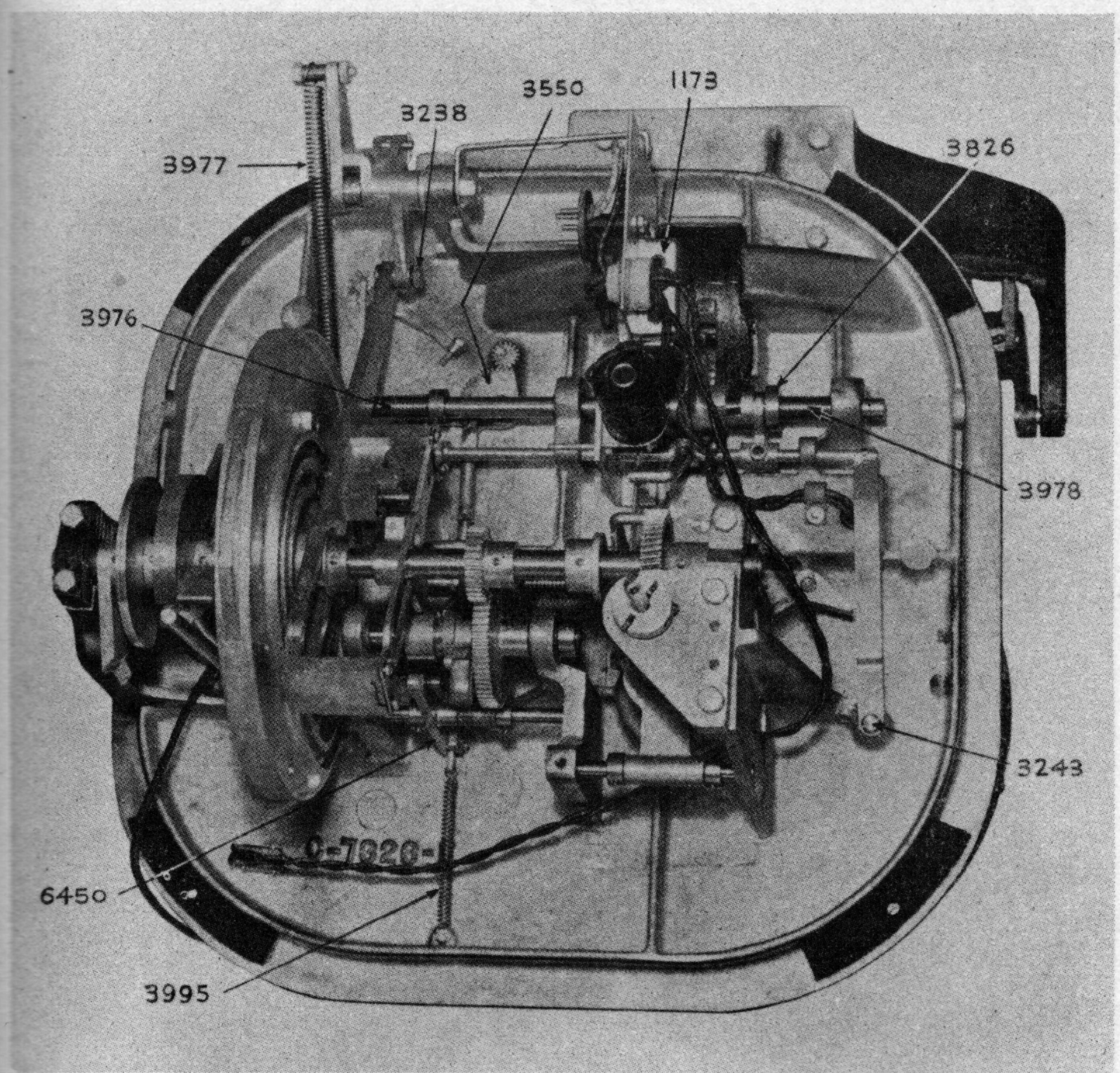

Fig. 81

1173 Condenser—0.1 Mfd. 400-Volt (in can)
3238 Shoulder Screw—Magazine Slide Arm
3243 Shoulder Screw—Repeat Lever
3550 Record Reverse Pinion Segment
3826 Record Repeat Sliding Clutch Cam
3976 Spring—Record Separator Hook Lever
3977 Spring—Magazine Slide Arm
3978 Spring—Record Repeat Clutch
3995 Spring—Reverse Arm
6450 Reverse Cam Arm and Roller Assembly

this lever is made by loosening the Allen set screw to a sliding tension then moving the part along the shaft. The sliding clutch should engage in the "One Side" and "Both Sides" positions, but should be disengaged in the "Repeat" position. The fork of this lever should not bind the sliding clutch in either the "Repeat" or "Both Sides" position.

24. Lateral Location of the Main Cam Shaft. Both end bearings of the main cam shaft are movable, and are used to locate the cam shaft in its proper lateral position, as well as adjust the amount of end play. The main cam shaft is located laterally so that the ball in the end of the tone arm lift rod (6457) (Fig. 86) travels in the exact center of the tone arm lift cam (6449) (Fig. 86). As shown at H in Fig. 86.

25. To Adjust the Stop Trip Switch (2792) (Fig. 84). This switch is accessible by removing the turntable, which will expose the switch cover. To remove the switch cover it is necessary to remove the trip arm, which goes through the switch cover and the two flat head screws which hold the cover in place. The clearance between the contact points on the fixed and movable arms of the switch should be $\frac{1}{32}''$. After replacing the trip arm (6510) (Fig. 84) in the switch, after the switch cover has been removed, set the turntable on the spindle, push stop trip arm (4533) (Fig. 84) slowly about $\frac{1}{4}''$ toward the magazine and then turn the turntable through one complete revolution. This will insure the fibre cam, on the turntable, resetting the trip switch, the clearance between the trip arm and the movable arm of the switch should be $\frac{1}{32}''$. The distance between the trip arm and the switch trip guard finger should also be $\frac{1}{32}''$.

To adjust the clearance between the trip arm hook (6510) (Fig. 84) and the movable switch arm, loosen the screw in the bakelite switch base, at the end nearest the tone arm. Move the switch until $\frac{1}{32}''$ clearance is secured between the trip arm hook and the movable arm of the switch, then tighten the screw holding the switch. In making this adjustment be sure that the stationary arm of the switch is not bent when tightening this screw.

On some models a headless set screw, near the end of the coil spring, is used to lock the switch in position; loosen this screw, adjust the switch, then tighten the set screw.

26. To Adjust the Solenoid Motor Switch (2764) (Fig. 80). After the switch cover has been removed the switch is exposed. The upper switch points should make good electrical contact, while the main clutch is disengaged, in this position the clearance between the bottom points should be approximately $\frac{3}{32}''$. While the clutch moves from the disengaged to the engaged position the upper switch points should remain closed until the lower set of points are closed. When the clutch is fully engaged the lower points should make good contact and the clearance between the upper points should be approximately $\frac{3}{32}''$.

To adjust the switch loosen the screw through the bakelite switch base at the rear of the switch assembly. After the position is found where proper clearance is secured, with the clutch engaged and disengaged, the switch should be locked in position with the screw.

In some machines a headless set screw is used to lock the switch in position. This screw is near the point of the tapered bakelite insulating block. Loosen this screw and adjust switch to get proper clearance then lock the switch in position by the set screw.

The two upper contacts are in series with the auto trip switch and the two lower contacts are shunted across the motor switch. When the clutch is engaged the auto trip switch is out of circuit and the motor switch is shunted by the lower contacts thus insuring the completion of the change cycle even though the instrument is switched to radio or turned off.

27. To Adjust the Friction Joint of Automatic Trip Switch. The amount of friction necessary in the friction joint between the auto stop trip lever—long (6510) (Fig. 84) and the auto stop trip lever—short (4533) (Fig. 84) should be just sufficient to close the automatic stop trip switch (2792) (Fig. 84). The friction is regulated by adjusting the screw which tightens the flat

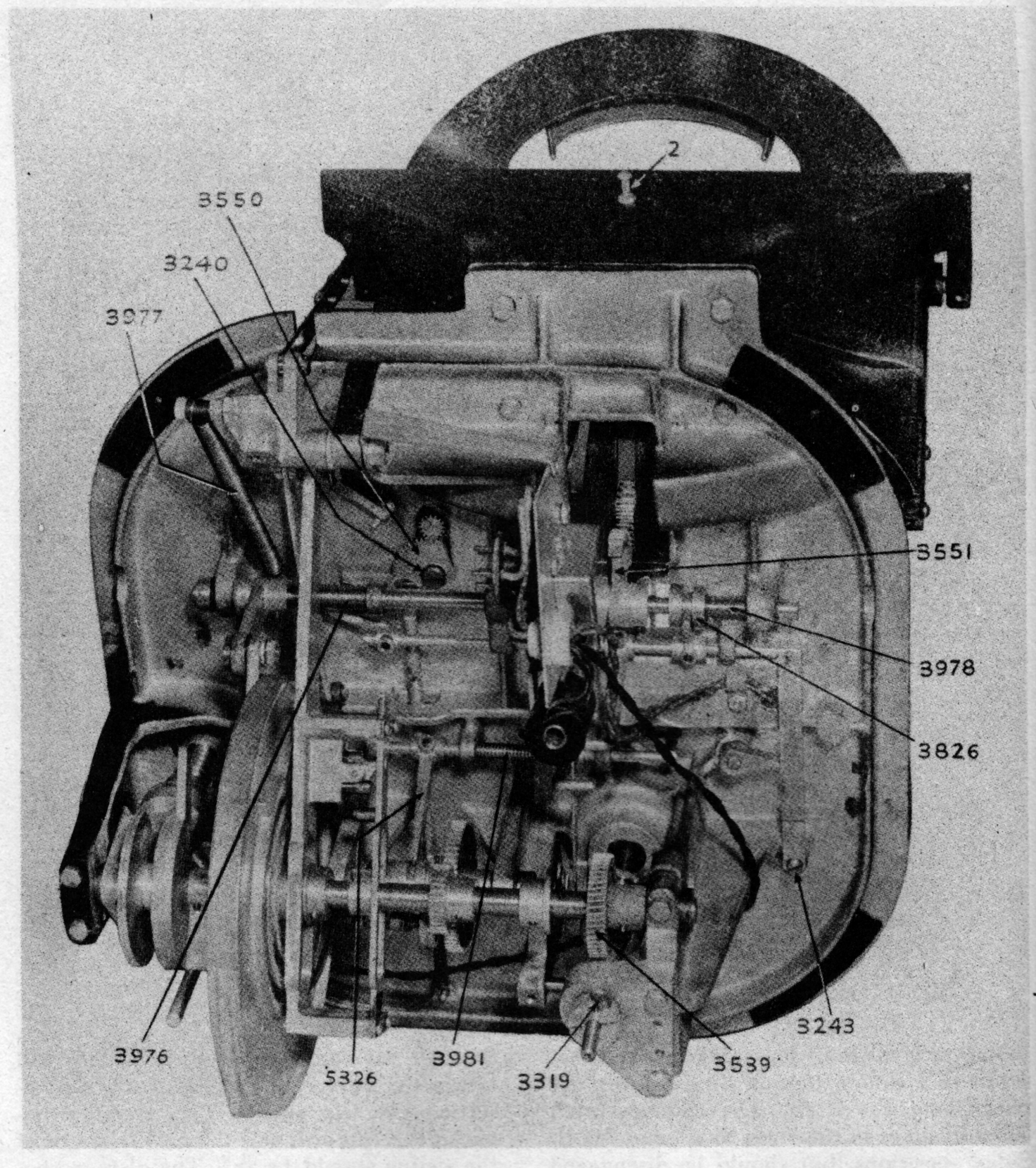

Fig. 82

3240 Shoulder Screw—Reverse Segment
3243 Shoulder Screw—Repeat Lever
3319 Screw—Turntable Shaft Collar
3539 Worm Gear—Main Drive
3550 Record Reverse Pinion Segment
3551 Record Tray Gear—Driver
3826 Record Repeat Sliding Clutch Cam
3976 Spring—Record Separator Hook Lever
3977 Spring—Magazine Slide Arm
3978 Spring—Record Repeat Clutch
3981 Spring—Record Reverse Cam Control
5326 Record Reverse Cam Shift Lever

spring (3998) (Fig. 84). If the tension is too great the instrument may trip before finishing a record, if not enough tension is had the instrument will not change records when the needle hits the automatic change groove.

28. Record Size Limit. The 16-E Series record changer will play any 10″ or 12″ record of standard size. The minimum size for 12″ records is 11⅞″. The minimum size for 10″ records is 9$\frac{27}{32}$″. Records smaller than these limits are very apt to miss centering over the turntable spindle and in most cases are broken.

These record changers will automatically trip on any record having an automatic stop change groove, either spiral or oscillating, where the blank space in the center of the record is not more than 6½″ in diameter.

29. Records. Always inspect the records to see that no rough edges are present. Occasionally you will find a record which has a rough outside edge. This rough edge will greatly interfere with the satisfactory performance of the record changer. A small piece of No. 00 sandpaper will assist you greatly in removing this rough edge.

30. To Adjust the Vertical Bumper Guide (6693) (Fig. 83). This guide is located back of the magazine cross bar (6685) (Fig. 83). After the records are separated from the magazine they are guided in dropping off the separator so they hit the center of the record bumpers (5081) (Fig. 83). This vertical bumper guide also guides the records when the elevating hook, on the rear of the record tray lifts the record. The vertical bumper should be set back just far enough to allow a 12″ record to drop onto the record bumpers freely. The lower part of the vertical bumper, which extends into the record well, should extend toward the center of the well rubber bumpers far enough to make sure that the upper edges of the records fall behind the points of the upper record support (5517) (Fig. 83). This adjustment is not critical. In most cases it will be found that the upper end of the vertical bumper will just clear the elevating hook on the rear of the tray. In cases where it is found that 10″ records are chipping about the edges, due to bounding against the points of the upper record support (5517) (Fig. 83) it will be necessary to bend the vertical bumper (6693) (Fig. 83) back at the top to a point where it just barely clears the elevating hook at the rear of the tray. It should never be bent back far enough to raise the front of the tray.

31. Clutch Clearance. The clearance between the driven (6326) (Fig. 87) and driving (3630) (Fig. 87) members of the clutch should be approximately .020″ (twenty thousandths), and is adjusted by loosening screw No. 16 (Fig. 80) to a sliding tension and adjusting the clutch fork (5333) (Fig. 79) and the solenoid to clutch lever and pin assembly until the proper clearance is obtained. After adjustment is made lock the screw No. 16 (Fig. 80).

32. Motor Connections (21131). The 21131 motor is a synchronous motor and will run equally well in either direction, when properly connected. For this reason, all motors shipped from the factory are equipped with a terminal strip and cable. However, if it should ever be necessary to disconnect the leads from the terminal strip the leads should be replaced in the following order: With the cable extending to the right of the terminal strip and the mounting lugs pointing downward, and the soldering lugs towards you, the leads go on from left to right in the following order—small black, black with yellow tracer, blue and large

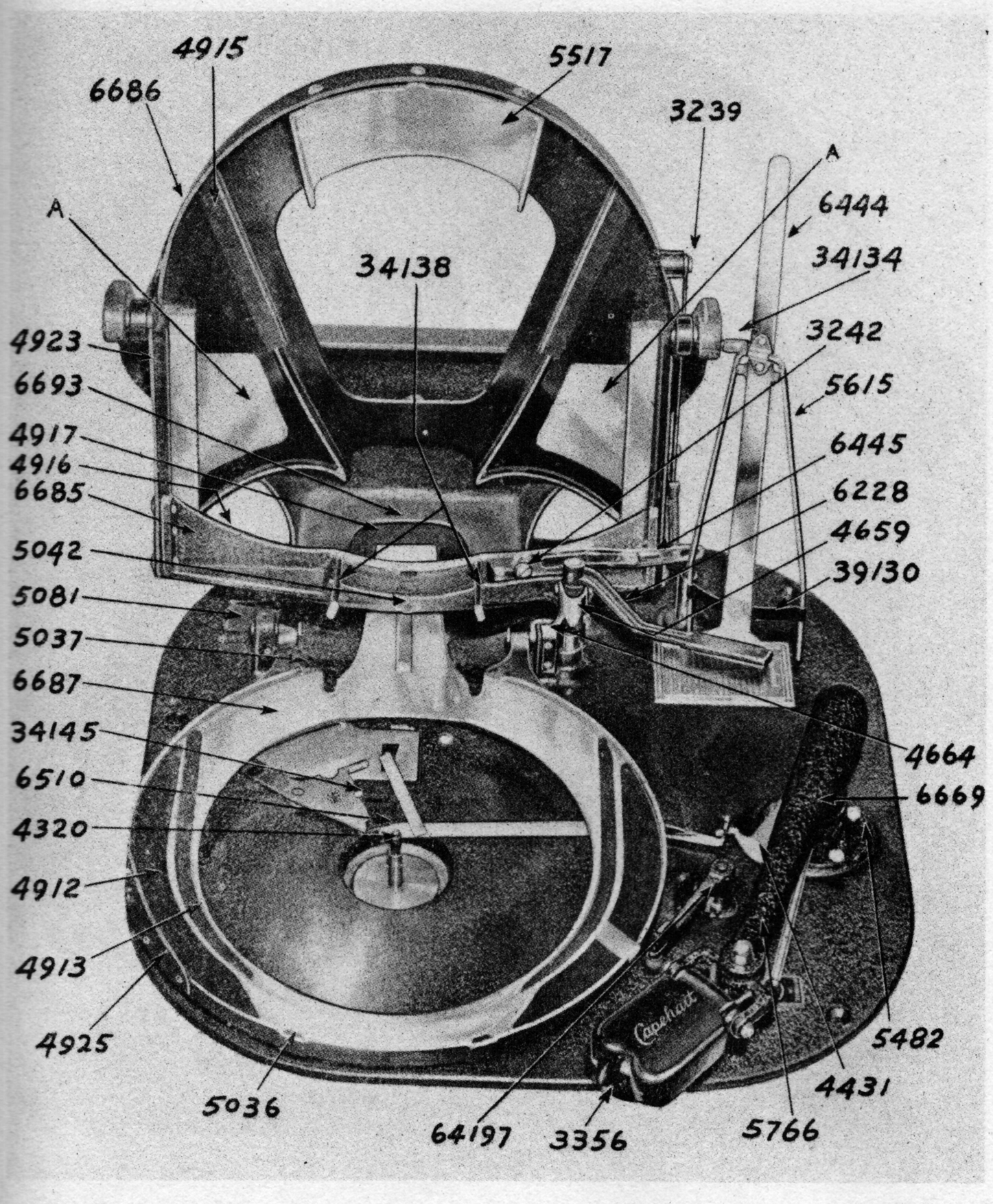

Fig. 83

3239 Shoulder-Screw-Magazine Link
3242 Shoulder Screw—Separator
3356 Pickup Needle Screw (Magnetic)
4320 Turntable Drive Shaft Cap
4431 Automatic Stop Trip Quadrant Bracket
4659 Record Reversing Arm Lock
4664 Record Reverse Arm Lock Stop
4912 Record Tray Felt—Large
4913 Record Tray Felt—Small
4915 Record Magazine Felt
4916 Lower Record Support Felt
4917 Record Bumper Guide Felt
4923 Magazine Side Felt
4925 Record Way Shield Felt Outer
5036 Record Tray Bumper—Front
5037 Record Tray Bumper—Rear
5042 Reverse Arm Bumper
5081 Record Bumper
5482 Pickup Arm Base
5517 Record Support—Upper
5615 Record Reverse Guide
5766 Pickup Arm
6228 Record Reverse Arm and Fork Assembly (Specify color)
6444 Record Reverse Guide Assembly
6445 Record Separator and Hub Assembly
6510 Automatic Stop Trip Lever Assembly
6669 Pickup Arm Assembly complete
6685 Lower Record Support Assembly
6686 Record Magazine Assembly
6687 Record Tray Assembly
6693 Record Bumper Guide and Felt Assem.
34134 Pin—Reverse Guide Stop
34138 Pin—Record Support
34145 Pin—Record Control Rod
39130 Record Reverse Guide Spring
64197 Pickup Arm Stop Lever Assembly (Specify color)

black. In that order they are ground, one side of 110-volt line, one side of the condenser, and the remaining 110-volt and condenser leads. The motor terminal strip should be mounted to the cabinet terminal strip so that the cable extends to the right, with the soldering lugs towards you.

33. Oiling Instructions. Due to its careful design and precise workmanship, the Capehart 16-E record changer requires a minimum of oiling.

About once each year a light coat of vaseline or petroleum jelly should be applied to all moving surfaces which were coated with graphite at the factory.

A very light coat of vaseline should be applied to the surfaces of the magazine, indicated at "A" in Fig. 83. It is best to apply this coating every six months. The vaseline should be applied with, and removed by, the fingers, on the magazine faces. DO NOT USE EXCESSIVE AMOUNTS OF LUBRICANT ANYWHERE ON THE RECORD CHANGER.

A good grade of machine oil, not too light, should be used on the sliding clutches, reverse cam shaft and all eccentric and shoulder screws.

NEVER OIL THE "DUREX" BUSHINGS, AS THIS WILL CAUSE THEM TO DISINTEGRATE.

Once each year the motor oil cups should be oiled with a good grade of motor oil. At the same time the gear box should be inspected, and the grease replaced if it has become hard. A good mixture to use here is 75% vaseline and 25% SAE 40 motor oil.

34. Instructions for Replacing the Record Reverse Cam and its Adjustments.

1. Set record changer in the playing position. Carefully mark the drive gear (3516) (Fig. 87) on the main shaft and the driven gear shown as part of 6623, Fig. 87, by prick punch marks or scriber, so that the same teeth can be engaged after reassembly, thus insuring proper timing.

2. Remove the two bolts, one (3238) (Fig. 81) securing the magazine slide and roller assembly to the magazine slide arm lever, and one (3237) (Fig. 78) securing the record slide arm and stud assembly to the record tray drive crank.

3. Looking in from the rear of the instrument, remove the Durex bushing from the end of the main cam shaft, nearest the motor drive shaft. This is accomplished by loosening the bolt to the right of the main shaft. Care should be taken when replacing this bushing so as not to tighten the bolt enough to crush the bushing; a snug fit only is required.

4. Remove lower half of bearing and Durex bushing from the other end of the main cam shaft and work the cam shaft out of the record changer. The same precaution against crushing this bushing should be taken with this one as with the one in the preceding section.

5. Remove taper pin from gear and loosen set screw in the collar, both shown as 6233 in Fig. 85, of the reverse cam shaft assembly, as well as the pin (34144) (Fig. 87) over which the reverse cam forks, when in the

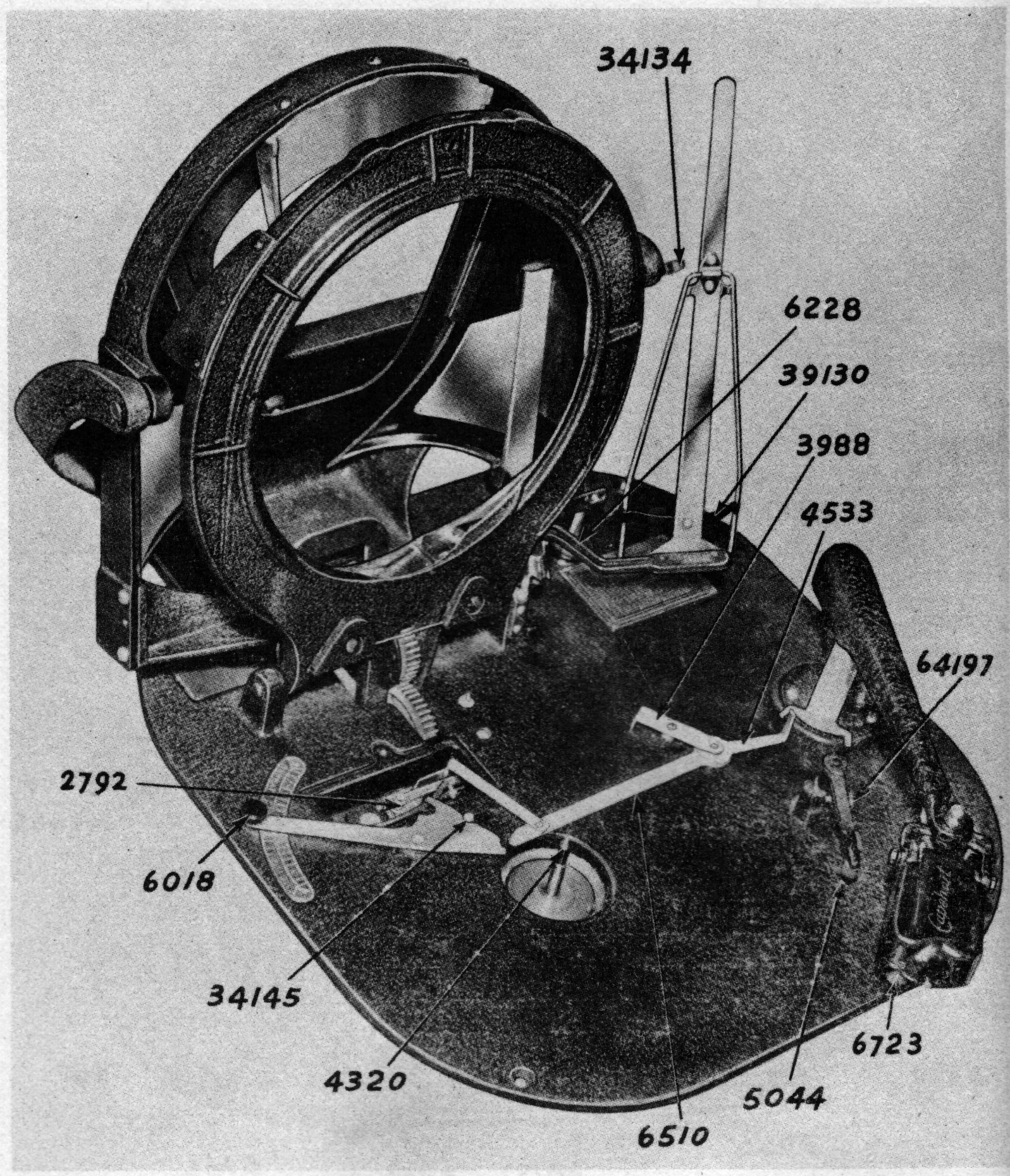

Fig. 84

2792 Record Trip Switch Assembly—complete
3988 Spring—Automatic Trip Lever Pin
4320 Turntable Drive Shaft Cap
4533 Automatic Stop Trip Lever—Short
5044 Stop Lever Roller Tubing
6018 Selector Knob
6228 Record Reverse Arm and Fork Assembly (Specify color)
6510 Automatic Stop Trip Lever Assembly
6723 Pickup Brush Assembly
34134 Pin—Reverse Guide Stop
34145 Pin—Record Control Rod
39130 Record Reverse Guide Spring
64197 Pickup Arm Stop Lever Assembly (Specify color)

reversing position. After removing the collar and sliding the gear to one side, file all burrs from the edges of the holes in the reverse cam shaft. Slide the shaft through its Durex bushing toward the rear of the instrument far enough to allow the removal and replacement of the reverse cam (6325) (Fig. 87).

6. Reassemble the reverse cam shaft assembly, making certain that the taper pin holes in the shaft and gear are correctly aligned to permit the taper pins being properly inserted. The set screw in the collar at the end of the shaft should be properly tightened.

7. Remove the reverse cam arm and roller assembly (6450) (Fig. 79) and make sure that the roller pin and arm are not bent, if either of these items are found bent we suggest that you replace the reverse arm and roller assembly.

8. In reassembling the reverse cam arm and roller assembly (6450) (Fig. 79) in its proper position for alignment with the reverse cam, be sure the roller is about $\frac{1}{32}''$ inside the ridge on the reverse cam, when the cam is in the reversing position.

9. Remove the taper pin from the gear (3516) (Fig. 87) on the main shaft, which drives the gear on the reverse cam shaft assembly (6233) (Fig. 87) and remount the main shaft to the record changer chassis, pushing the above gear, from which the pin was removed, to one side so that it will not mesh with its driven gear.

10. Locate the main shaft so that the lower end of the pickup arm left shaft travels in the center of the pickup arm lift cam, as shown at "H" in Fig. 86. With the main shaft in this position, adjust the main shaft Durex bushings so that there is no end play in the main cam shaft assembly.

11. Rotate the main cam shaft to the playing position so that the pickup arm is lowered over the turntable.

12. Set the reverse cam in its lowest position, with the control lever in the "Both Sides" position, so that the fork of the reverse cam is meshed with the driving pin.

13. Mesh the reverse cam assembly driver gear (3516) (Fig. 87) with the reverse cam assembly driven gear so that the identifying punch marks correspond to the original position. The taper pin for the driver gear should be inserted next. If the assembly has been properly made there should be approximately $\frac{1}{32}''$ clearance between the roller or the reverse cam arm and the reverse cam. See "A," Fig. 86.

14. Throw the control lever to the "One Side" position and rotate the reverse cam with the fingers until it is in the reversing position. Again throw the control lever to the "Both Sides" position. Now there should be approximately $\frac{1}{32}''$ clearance between the reverse cam and the roller. See "B," Fig. 86. If the clearance is not approximately $\frac{1}{32}''$ for both positions of the reverse cam it indicates either the gears are not properly meshed or the reverse segment link rod may be bent. A careful check of the latter while the main shaft is out will save time and trouble later.

35. Instructions for Removing the 16-E Record Changer. There is a great possibility, when removing the chassis from the cabinet, to mar or scratch the cabinet. If you will place a piece of cardboard around the record changer it will eliminate, to a great extent, the possibility of marring the finish.

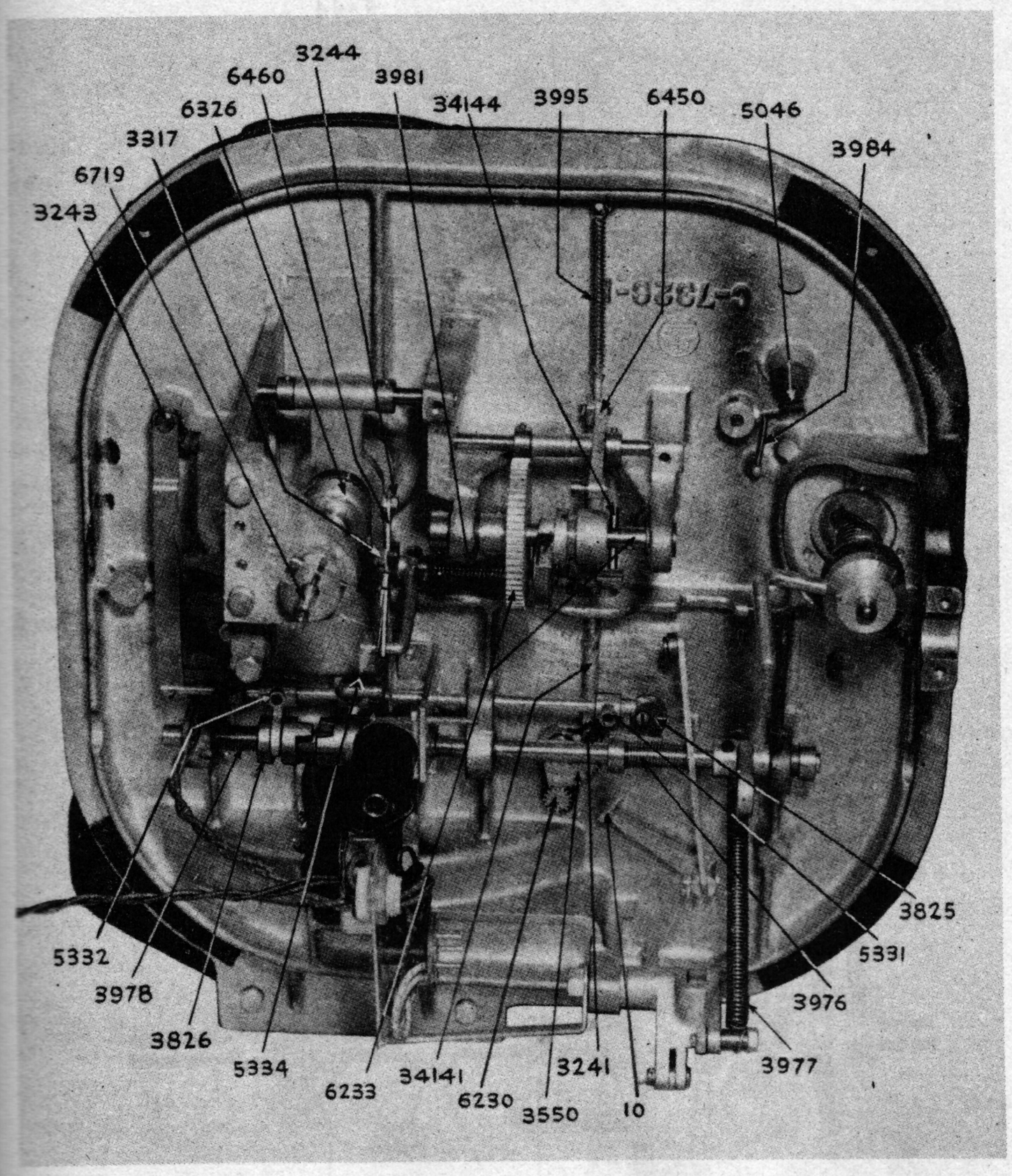

Fig. 85

3241 Shoulder Screw—Reverse Segment Link
3243 Shoulder Screw—Repeat Lever
3244 Shoulder Screw—Clutch Throwout Lever
3317 Screw—Clutch Throwout Cam
3550 Record Reverse Pinion Segment
3825 Reverse Segment Stop Cam
3826 Record Repeat Sliding Clutch Cam
3976 Spring—Record Separator Hook Lever
3977 Spring—Magazine Slide Arm
3978 Spring—Record Repeat Clutch
3981 Spring—Record Reverse Cam Control
3984 Spring—Tone Arm Lever
3995 Spring—Reverse Arm
5046 Stop Lever Collar Pin Tubing
5331 Record Repeat Throwout Hook Lever
5332 Record Repeat Clutch Fork Lever
5334 Record Repeat Lock Lever
6230 Reverse Pinion and Crank Assembly
6233 Record Reverse Cam Shaft Assembly
6326 Worm and Bushing Assembly
6450 Reverse Cam Arm and Roller Assembly
6460 Clutch Throwout Lever and Spring Assembly
6719 Turntable Drive Shaft Assembly
34141 Pin—Short—Reverse Segment
34144 Pin—Reverse Cam Shaft

A rubber auto mat, with a hole for the record changer, the same size as the one in the cabinet, makes an excellent pad. This pad can be split and is easily put in position and removed.

Remove the backs from the record changer, radio and amplifier compartments.

Remove the screws from the partition between the radio and record changer compartments, so it can be moved back out of the way.

Remove the wood screw, under the turntable, also the three bolts which hold the record changer down.

Remove the two wood screws that mount the play control.

Remove the female chassis plug, from the male chassis plug (6178) (Fig. 78), the pickup lead, which runs from the radio chassis to the terminal block, then dismount the terminal block by removing the wood screw in its center, the straps holding the shielded lead, which runs from the shorting switch, and the 110-volt leads to the Play Control.

Release the play control cable and cable housing from the bracket on the record changer chassis, by loosening the two set screws. Care should be taken to prevent breaking the control cable when removing it. The end which has been kinked by the set screw should be straightened before attempting to reinstall it.

Loosen the two Allen set screws in the flexible coupling and allow it to slide down the motor shaft, so as to clear the record changer shaft.

Move the play control as far into the radio compartment as possible.

Remove the screw marked "B" in the illustration on page 109. This is the middle one of the screws holding the upper record support.

Remove the magazine link shoulder screw (3239) (Fig. 83). This will allow the magazine to be swung out of the way. As soon as the record reverse arm and fork assembly have cleared the reverse crank and pin (6230) (Fig. 78) it should be swung over the magazine and locked with the record reverse arm lock (4659) (Fig. 83), to keep it out of the way.

Lift the record changer up, until the tone arm just touches the top of the cabinet, carry it forward through the doors, tilting it to keep the main cam clear of the shelf.

All parts of the cabinet liable to damage should be protected by soft cloths while removing or installing the record changer.

It is not necessary that the above operations be carried out in the above sequence.

36. Alignment of True-Tangent Pickup. When adjusting the TRUE-TANGENT pickup the pickup head and tone arm should form a straight line, when the needle is exactly one and one-half inches from the point of the turntable drive shaft cap (4320) (Fig. 83). To adjust the pickup angle, loosen the nut at the rear of the steering arm assembly (66254) (Fig. 78), turn the steering arm either right or left until the correct position for the pickup is found, then set the locknut up tight. Then see that there still is 5/8" clearance between the pickup and the record tray per Section 11.

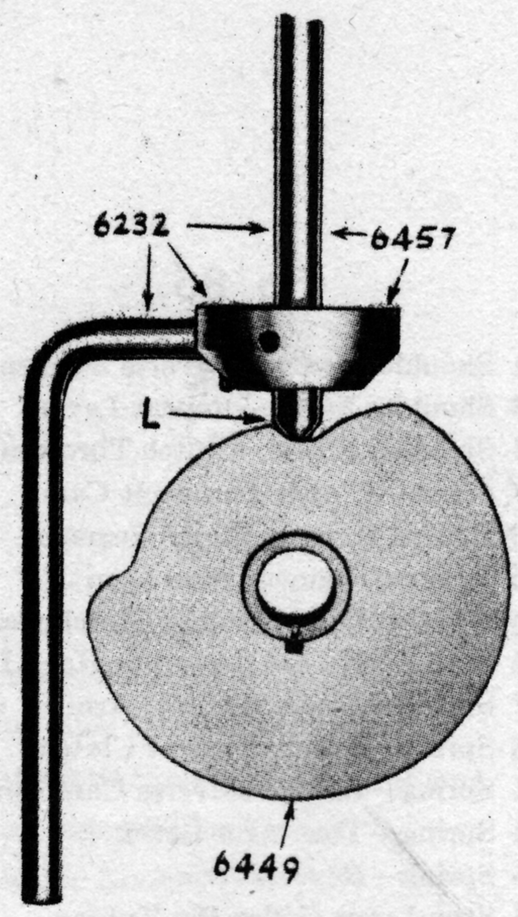

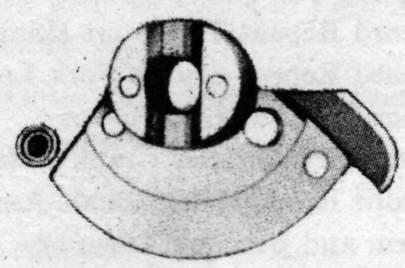

A

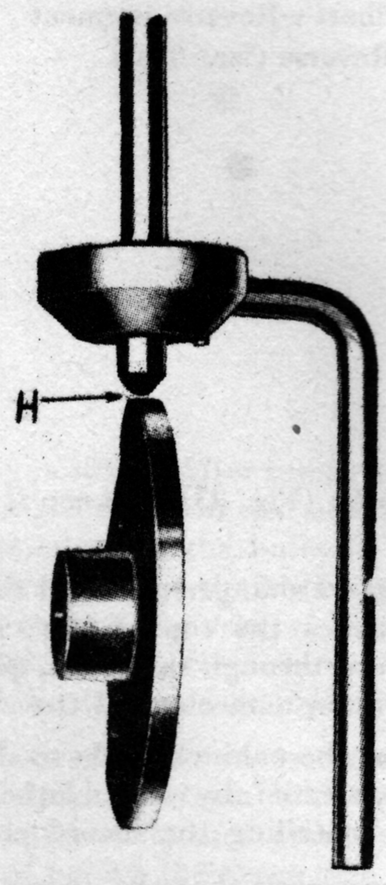

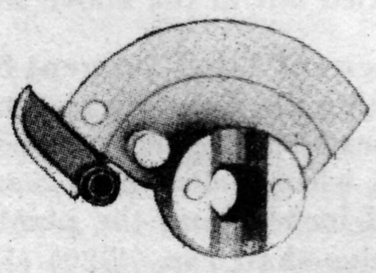

B

Fig. 86

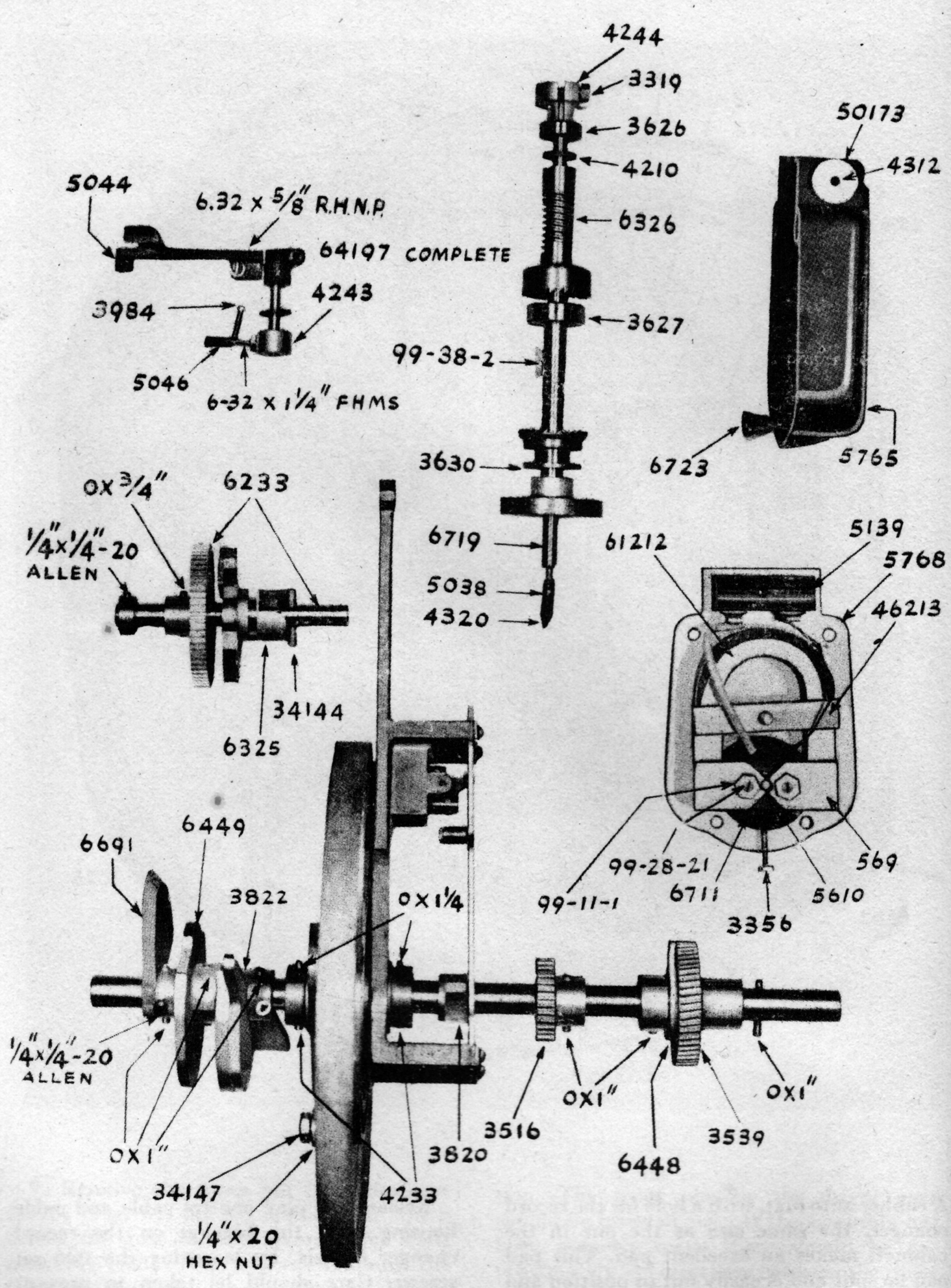

Fig. 87

6232 Pickup Swing Lever and Collar Assembly
6325 Reverse Cam
6449 Pickup Arm Lift Cam
6457 Pickup Arm Lift Shaft

3319 Screw—Turntable Shaft Collar
3356 Pickup Needle Screw
3516 Gear—Reverse Cam Shaft Driver
3539 Worm Gear
3626 Ball Bearing
3627 Ball Bearing
3630 Turntable Shaft Clutch
3820 Magazine Slide Arm Cam
3822 Pickup Arm Swing Cam
3984 Spring—Tone Arm Stop Lever
4210 Thrust Washer—Worm Shaft
4233 Main Cam Collar
4243 Pickup Arm Stop Lever Collar
4244 Turntable Shaft Collar
4312 Pivot Bushing
4320 Turntable Driveshaft Cap
46213 Magnet Holder
5038 Turntable Driveshaft Cap Tubing
5044 Stop Lever Roller Tubing
5046 Stop Lever Collar Pin Tubing
50173 Tone Arm Insulating Bushing
5139 Terminal Block
569 Pole Piece
5610 Stylus
5765 Pickup Cover
5768 Pickup Back
61212 Pickup Magnet
6233 Record Reverse Cam Shaft Assembly
6325 Record Reverse Cam and Pin
6326 Worm and Bushing Assembly
6448 Turntable Throwout Cam and Hub Assembly
6449 Pickup Lift Cam and Hub Assembly
64197 Pickup Arm Stop Lever Assembly
6691 Pickup Arm Friction Cam Assembly
6711 Spool Assembly
6719 Turntable Shaft Assembly
6723 Brush Assembly
34144 Pin—Reverse Cam Shaft
34147 Pin—Record Tray Slide
99-11- 1 6-32 Hex. Nut
99-18-21 6-32x 3/8" RHMS
99-28- 3 6-32x 1/4" Headless Set Screw
99-28-21 6-32x 1/8" Headless Set Screw
99-38- 2 No. 2 Woodruff Key

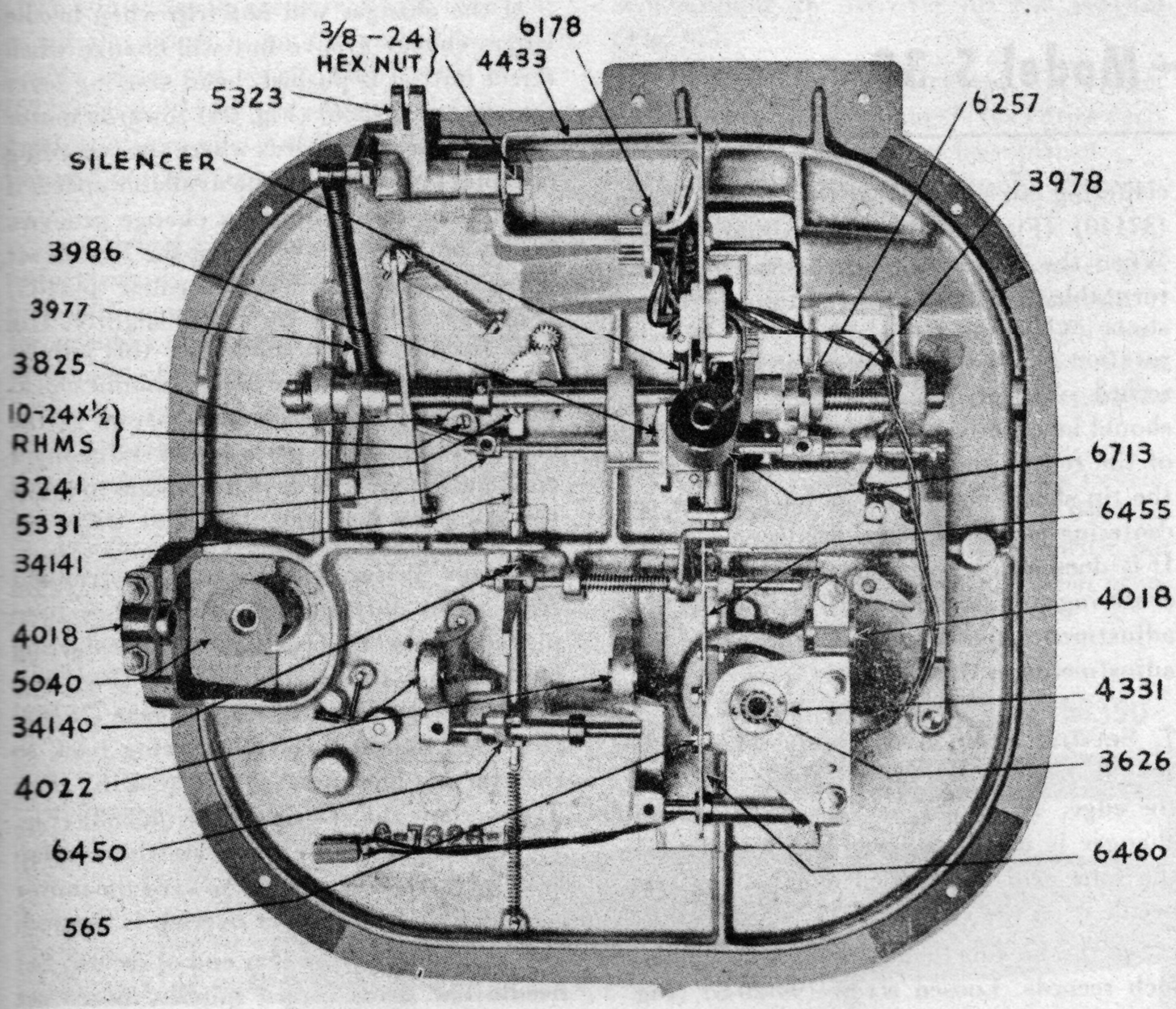

Fig. 88

565 Clutch Throwout Cam
3241 Reverse Segment Link Shoulder Screw
3626 Ball Bearing
3825 Reverse Segment Stop Cam
3977 Magazine Slide Arm Spring
3978 Record Repeat Clutch Spring
3986 Solenoid Lever Torsion Spring
4018 Main Shaft Bushing
4022 Record Tray Shaft Bushing
4331 Bearing Retainer Plug
4433 Solenoid Plate Bracket
5040 Pickup Arm Brake Facing
5323 Magazine Slide Arm Lever
5331 Record Repeat Throwout Hook Lever
6178 Chassis Plug
6257 Record Tray Gear and Sliding Cam Assembly
6450 Reverse Cam Arm and Roller Assembly
6455 Solenoid to Clutch Lever and Pin Assembly
6460 Clutch Throwout Lever and Spring Assembly
6713 Solenoid Assembly
34140 Reverse Segment Pin, Long
34141 Reverse Segment Pin, Short

Fig. 89

2722 AC Line Toggle Switch
3240 Reverse Segment Shoulder Screw
3243 Repeat Lever Shoulder Screw
3550 Record Reverse Pinion Segment
3724 Record Control Shaft
3977 Magazine Slide Arm Spring
3981 Record Reverse Cam Control Spring
3983 Separator Hook Spring
3984 Tone Arm Stop Lever Spring
3995 Reverse Arm Spring
4020 Record Magazine Bushing
4238 $\frac{7}{16}$" Collar
4239 $\frac{5}{16}$" Collar
4243 Pickup Arm Stop Lever Collar
4663 Record Repeat Throwout Lever
5046 Stop Lever Collar Pin Tubing
5326 Record Reverse Cam Shaft Lever
5332 Record Repeat Clutch Fork Lever
5333 Main Clutch Fork Lever
5334 Record Repeat Lock Lever
5339 Reverse Cam Lock Lever
6221 Record Tray Drive Shaft Assembly
6223 Record Reverse Arm Shaft Assembly
6224 Solenoid Lever Shaft Assembly
6226 Separator Hook and Arm Assembly
6230 Reverse Pinion and Crank Assembly
6231 Record Control Lever and Stud Assembly
6451 Separator Hook Lever and Roller Assembly
50117 Main Frame Pad
00x5/8 Taper Pin
0x3/4 Taper Pin

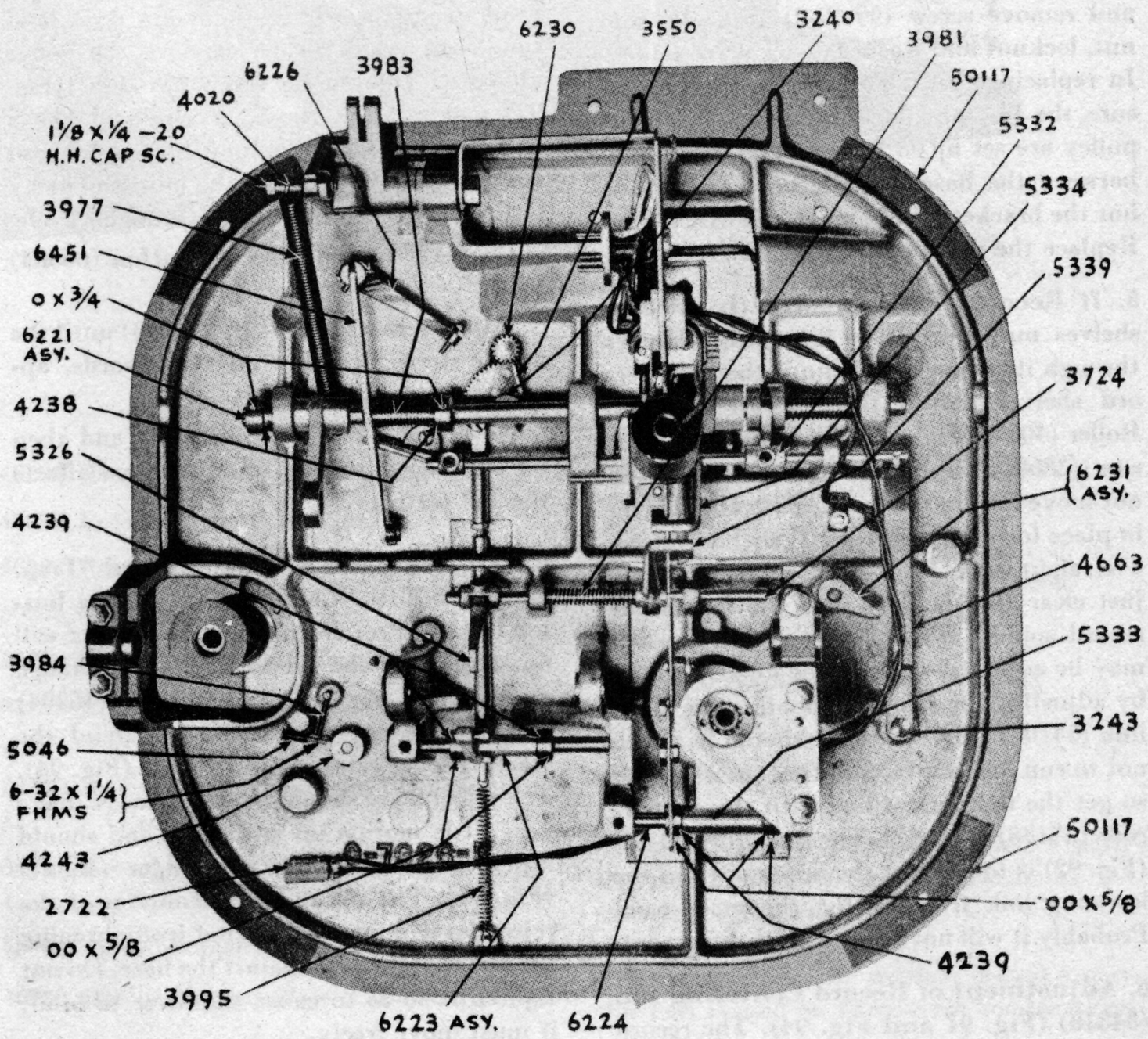

Farnsworth—Model S 30

SERVICE

1. To Remove the Turntable (5779) (Fig. 90). The turntable unscrews from the record spindle (37140) (Fig. 90) by turning the turntable counter-clockwise. If the main cam (3869) (Fig. 93) turns backwards, damage to the starting lever release assembly spring may result. Hold the main cam while unscrewing the turntable.

2. To Adjust Drive Pulley (3672) (Fig. 91). In case "wows" are heard in the reproduction, additional tension should be placed on the turntable drive bracket spring by turning the spring clip, which is held by one of the motor mounting screws (99-19-19) (Fig. 91) so as to increase the tension on the spring. On earlier models, it may be necessary to bend the hairpin spring.

3. To Replace Drive Pulley (3672) (Fig. 91). Remove the hairpin cotter key (99-34-12) (Fig. 91) and the drive disk thrust washer (50209) (Fig. 91). This permits the removal of the turntable drive pulley. In replacing this pulley, the long shoulder goes toward the base plate.

4. To Replace Turntable Drive Bracket and Stud Assembly (64216) (Fig. 91). Remove turntable drive pulley (see 92) and remove screw (99-19-2) (Fig. 91) and nut, locknut and washer under drive pulley. In replacing this part (64216) (Fig. 91) be sure the nut and locknut under the drive pulley are set up so there is very little play between the base and the bracket (64216) but the bracket should move sidewise freely. Replace the drive pulley (See 92).

5. If Records Feed Incorrectly. Record shelves may be out of line. Run changer through its change cycle until the back record shelves are in their lowest position. Roller (4057) (Fig. 93) is on point C of main cam (3869) (Fig. 93). The front shelves do not move during the cycle. With the shelves in place for a 12″ record, 10″ shelves raised, a straight edge from shelf to shelf should just clear the shoulder near the top of the record spindle (37140) (Fig. 91). The shelf may be adjusted while in the lower position by adjusting the four nuts holding the lower link (54107) (Fig. 92). Care should be taken not to run one nut farther than another and so get the link out of line with the support rods (37138) (Fig. 92). The screw (99-20-45) (Fig. 92) is to prevent the upper nuts on the lowering link from hitting the main cam. Probably it will not require any adjustment.

6. Adjustment of Record Centering Pin (34310) (Fig. 91 and Fig. 94). The record centering pin should clear the record spindle (37140) (Fig. 94) by approximately $\frac{1}{32}$″. When the record spindle is rotated by the turntable, it will be seen the tip describes a circle. When the tip is at that point in its rotation where it is nearest the back of the record changer, the rear face of the tip should be exactly 1/64″ ahead of the rear face of the record centering pin. When rotated, the tip should leave and go back under the centering pin in the same relative positions. If it does not, it is necessary to spring the centering pin sidewise until it does. If this adjustment is made, check the other two adjustments in this section.

7. Setting Tone Arm Drop. The needle should drop on the record about 1/8″ from the edge. To adjust, make sure the record changer is in the playing position, that is the tone arm has moved over so that the needle is on the record.

Set the button (66364) (Fig. 91) for ten-inch records. Loosen screw (99-20-5) (Fig. 92) in the tone arm crank (54108) (Fig. 92).

Place needle on record 1/8″ from edge. Press tone arm return lever (64212) (Fig. 93) firmly against the main cam, holding tone arm crank against side of square hole away from record, at the same time hold tone arm crank firmly against the collar above it. Tighten set screw (99-20-5) (Fig. 92) making sure the tone arm still has a little up and down motion of the lift rod (43182) (Fig. 92). Check the adjustment by letting the record changer go through a cycle.

Load 12″ records and set button (66364) for 12″.

Adjust screw (99-18-19) (Fig. 93) until the needle drops properly on 12″ records, approximately 1/8″ from edge.

Never set for 12″ records first and then for 10″ records as the 10″ adjustment affects the 12″ setting.

8. Adjustment of the Record Trip. Changer Will Not Trip. If the reject button has no effect and the record changer will not trip when the needle enters the change grooves, see that the reject lever (46304) (Fig. 93) is not caught on or behind the starting lever release trip (64215) (Fig. 94). The reject lever should be free to move, have very little motion up and down and should hit the center of the trip finger (46287) (Fig. 93). The up and down motion of the reject lever may be corrected by tightening the nut that holds it against the base. Do not tighten it so as to cause the lever to bind; it must move freely.

If the changer will not trip when needle enters change groove but will change when reject button is pushed, bend starting lever trip spring (39226) (Fig. 94) towards motor spindle gear. On records where the recording occupies only 1/3 to 1/2 the available space, if instrument fails to trip in change grooves, it may be necessary to loosen the Bristol set screw in the trip friction collar (43185) (Fig. 92) and move the collar slightly. Use 6-32 Bristol wrench (6075) for this adjustment. Turn the collar a small amount clockwise, when viewed from the bottom of the changer. Check the operation of the changer on standard records as it is possible to move the collar too far.

Changer Trips Too Soon. If instrument trips when only half the record has been played, check the position of the starting lever release trip spring (39226) (Fig. 94). The dog, on the motor spindle gear (35102) (Fig. 94) should throw the spring back so the starting lever release trip (64215) (Fig. 94) overlaps the starting lever (46288) (Fig. 94) approximately $\frac{1}{16}$″. In case the overlap is less, bend spring slightly toward the motor spindle gear until proper overlap is secured.

If instrument trips near end of record: Set needle 1 3/4″ from record spindle, loosen set screw in collar, pin and set screw assembly (66355) (Fig. 92), turn collar slightly counter-clockwise (viewed from bottom of changer). This will decrease the tension on the friction trip lever spring (39228) (Fig. 92); tighten set screw and check tripping action on records again.

Adjustment of Trip Finger (42687) (Fig. 93). The trip finger must not rub on the base plate when tone arm is raised. It may be bent slightly to clear base plate if necessary.

The trip finger must move freely. If it moves stiffly or binds, tone arm cam (66366) (Fig. 93) may be dropped slightly.

The trip finger stop (46293) (Fig. 93) should be set exactly 2 1/2″ from outside of base plate.

9. Adjustment of Tone Arm Height. With a 10″ record on the turntable, a standard needle in pickup and 10″ records in the magazine, there should be approximately 1/4″ clearance between the top of the pickup and the bottom of the bottom record in the magazine during the change cycle. This clearance is adjusted by the screw (99-26-15) (Fig. 93).

Still with a 10″ record on the turntable, pickup in playing position, lift pickup off record so that both brush and needle clear record. The point of the needle should drop three-fourths of the thickness of the record below the top surface of the record. This height is adjusted by bending the tone arm support (64219) (Fig. 91).

To adjust needle pressure: Move tone arm so all the brush is on the record but the needle clears the edge. Adjust the brush (6725) (Fig. 91) by the screw in the pickup head so the needle is halfway between the top and bottom faces of the record.

Care should be taken to see that there is some slack in the pickup lead between the pickup arm and base. If the lead is too tight, the needle will skip over the record instead of stopping in the first groove.

10. To Remove Tone Arm. Loosen tone arm crank screw (99-20-5) (Fig. 93); loosen set screw in collar, pin and set screw assembly (66355) (Fig. 92); loosen screw holding cord clamp at rear of tone arm; lift tone arm straight up Recover lift rod (43182) (Fig. 92).

11. Replacement of Crystal Cartridge. On Farnsworth S30 changer, the entire cartridge, cord and plug must be replaced.

On Capehart Panamuse, only the cartridge need be replaced.

12. Removal of Main Cam. Remove turntable according to directions in Section 1. Remove nut (99-14-5) (Fig. 91) which holds main cam spindle. Pull record shelves down and main cam will slip out. Reassemble in the reverse order.

13. If Gears Jam, and changer won't cycle, see that starting lever (46288) (Fig. 94) is so positioned that when it engages with pin (34309) (Fig. 94) the first teeth mesh properly. It may be necessary to bend the lever to secure proper mesh.

14. A Squeak during the change cycle is usually caused by a lack of oil on roller (4058) (Fig. 93). A drop of oil placed on it will usually cure it.

Any rumble occurring during the change cycle between the motor spindle gear and the main cam gear, can be minimized by loosening the three screws (99-19-17) (Fig. 91) and properly positioning the motor spindle. Retighten the screws.

GARRARD . . . . See Magnavox Models RC5, RC8, RC10, RC11, RC50, and RC51

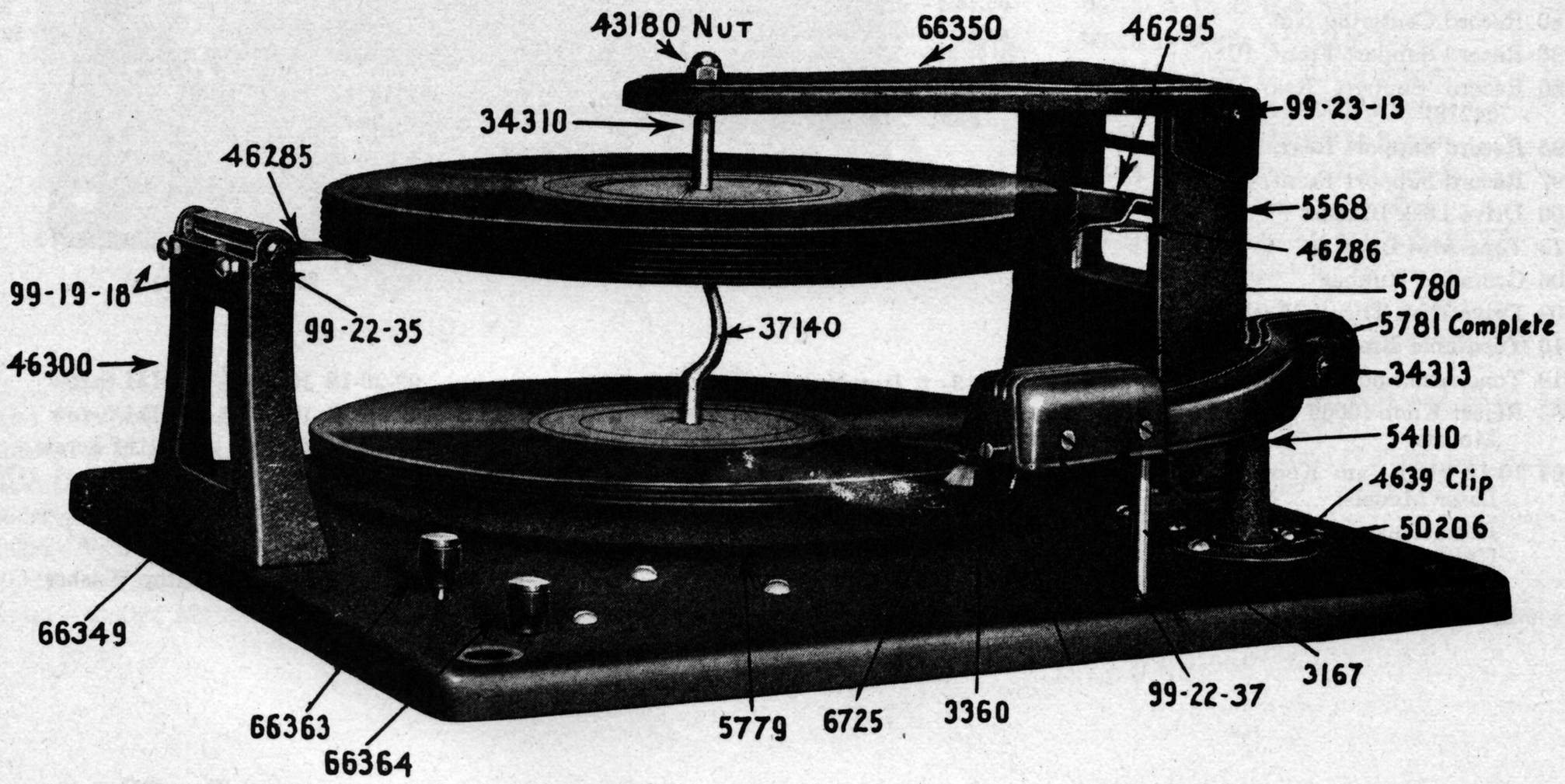

Fig. 90

3167 Tone Arm Support

3360 Needle Screw

4639 Wire Clip

5568 Record Support and Lowering Bracket Assembly

5779 Turntable

5780 Tone Arm

5781 Tone Arm, Complete

6725 Brush

34310 Record Centering Pin

34313 Tone Arm Hinge Pin

37140 Motor Spindle (Part of 6287)

43180 Record Centering Pin Nut

46285 Record Support, 10″ Front

46286 Record Support, 12″ Rear

46295 Record Support, 10″ Rear

46300 Record Support Bracket, Front

50206 Grommet, Rubber

54110 Tone Arm Support Housing

66349 Record Support Bracket Assembly, Front

66350 Record Support Plate and Pin Assembly (Farnsworth)

66391 Record Support Plate and Pin Assembly (Capehart)

46284 Record Support Plate (Farnsworth)

46330 Record Support Plate (Capehart)

66363 Reject Knob (Late Production: 6069)

66364 10 or 12 Stop Cam Knob (Late Production: 6069)

Decalcomanias: 50226 and 50227 used on late production with Knob No. 6069.

99-19-18 8-32x 5/16″ RHM Screw

99-22-35 6-32x 1/4″ Bind. HM Screw

99-22-37 4-36x 1/8″ Bind. HM Screw

99-23-13 8-32x 3/8″ Hinge Pin Screw

Where (Capehart) appears behind a part, this part is used on Capehart Panamuse Instruments exclusively.

Where (Farnsworth) appears behind a part this part is used on Farnsworth combinations exclusively.

Fig. 91

2328 Crystal Pickup Only (Capehart)
715–1 Crystal Pickup, Lead and Plug Assem. (Farnsworth) AK-59 Only
716–1 Crystal Pickup, Lead and Plug Assem. (Farnsworth—76, 95, and 96)
3671 Motor Drive Pulley
3672 Turntable Drive Pulley
6725 Brush
34310 Record Centering Pin
34315 Record Support Hinge Pin
37140 Motor Spindle (Part of 6287)
39225 Idler Spring (Changed to 39245 on Later Models)
39235 Spring—Pickup Wire Clip, Long
39237 Spring—Pickup Wire Clip, Short
43180 Record Centering Nut
46285 Record Support Front, 10″
46286 Record Support Rear, 12″ (Part of 64213)
46295 Record Support Rear, 10″
46297 Record Support Front, 12″
46306 Drive Disk Bracket
50173 Tone Arm Bushing
50206 Grommet Rubber
50209 Drive Disk Thrust Washer
64216 Turntable Bracket and Stud Assembly
64219 Tone Arm and Bracket Assembly
66363 Reject Knob (6069 Used on Later Models)
66364 10-12 Stop Cam Knob (6069 Used on Later Models)
Decalcomanias Nos. 50226 and 50227 Used on Later Models With Knob No. 6069.

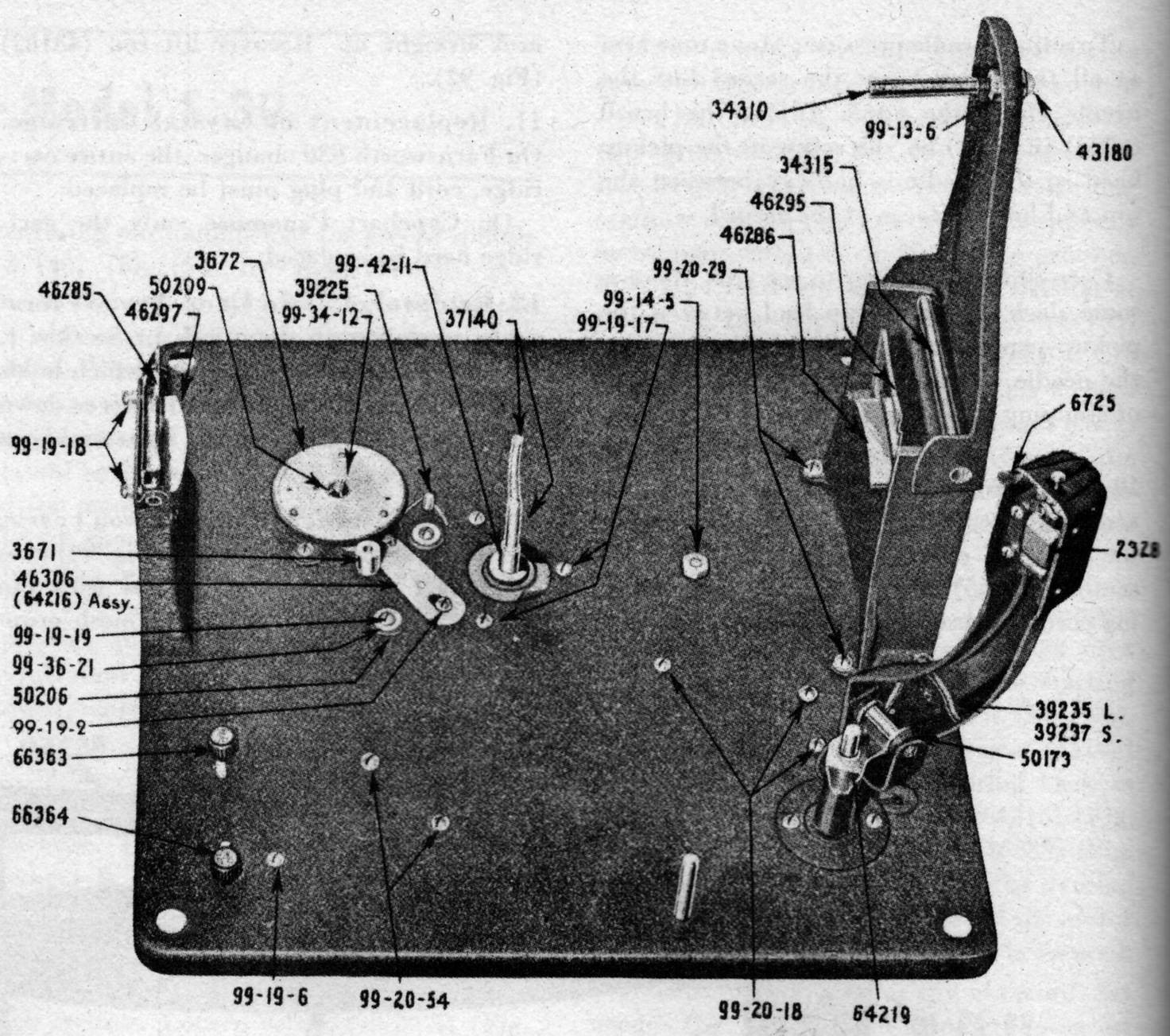

99-13- 6 Hex Nut.
99-14- 5 ¼x28 Hex Nut
99-19- 2 8-32x¼″ RHM Screw
99-19- 6 8-32x½″ RHM Screw
99-19-17 8-32x$\frac{5}{16}$″ RHM Screw
99-19-18 8-32x$\frac{5}{16}$″ RHM Screw
99-19-19 8-32x$\frac{7}{16}$″ RHM Screw
99-20-18 10-32x¼″ RHM Screw
99-20-29 10-32x$\frac{5}{16}$″ RHM Screw
99-20-54 10-32x1½″ RHM Screw
99-34-11 Hairpin Cotter Key
99-34-12 Hairpin Cotter Key
99-36-21 Washer
99-42-11 Turntable Stop Washer

Fig. 92

37138 Record Support Rod (Part of 64213)
39224 Spring—Record Lowering
39227 Spring—Trip Friction, Flat
39228 Spring—Trip Friction, Coiled
43182 Tone Arm Lift Rod
43185 Trip Friction Collar, Upper
45165 Friction Trip Lever
46288 Main Gear Starting Lever
46292 Tone Arm Lift Bracket
47124 Base Plate
50203 Trip Friction Drive-Cork
54107 Record Lowering Link (Part of 63119)
54108 Tone Arm Crank
64215 Start Lever Release Trip and Hub Assembly
66355 Collar, Pin and Set Screw Assembly, Lower
99-14- 3 ¼x28 Hex Nut
99-20- 5 10-24x½″ RHM Screw
99-20-45 10-24x2″ RHM Screw
99-42- 5 Washer

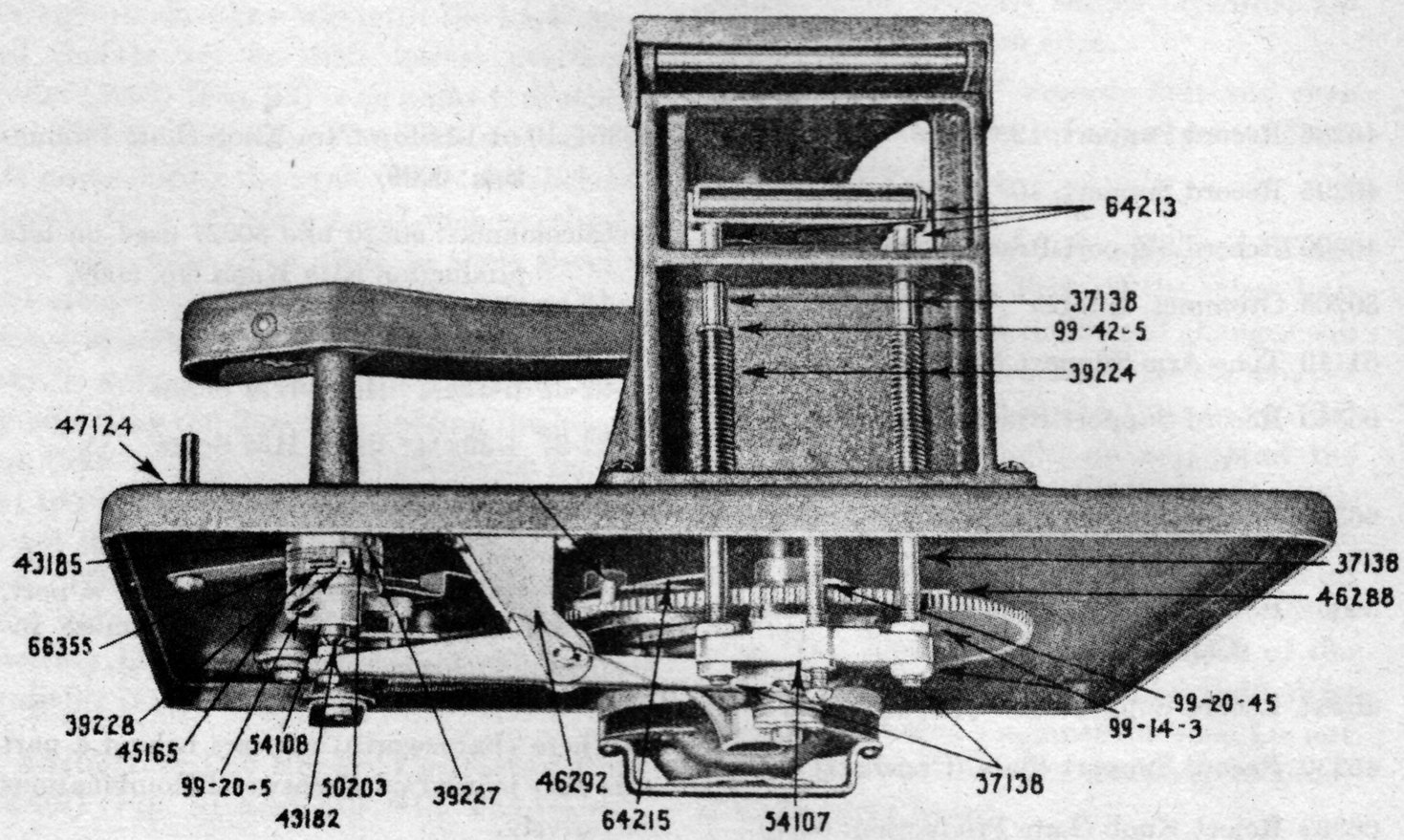

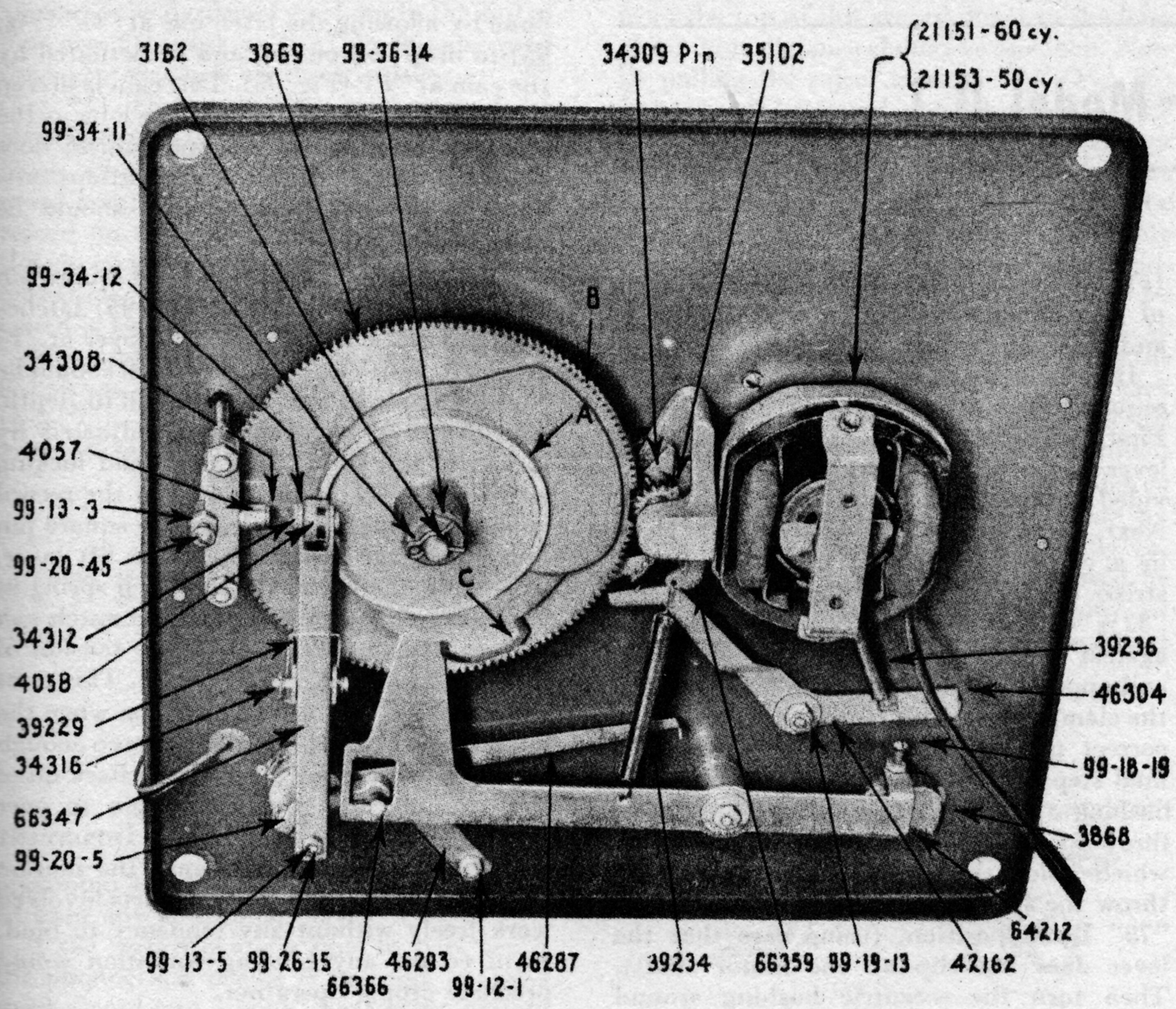

Fig. 93

3162 Main Cam Stud
3868 Tone Arm 10-12 Stop Cam
3869 Main Cam
4057 Roller—Record Lowering (Part of 63119)
4058 Roller—Tone Arm Lift
21151 Motor—60 Cy., AC
21153 Motor—50 Cy., AC
34308 Pin—Record Lowering (Part of 63119)
34309 Pin—Motor Spindle Gear
34312 Pin—Tone Arm Lift Lever
35102 Motor Spindle Gear (Part of 6287)
39229 Spring—Tone Arm Lift Lever
39234 Spring—Tone Arm Return Lever
39236 Spring—Reject Lever
42162 Shoulder Spacer
46287 Trip Finger
46293 Trip Finger Stop
46304 Reject Lever
64212 Tone Arm Return Lever and Hub Assembly
66347 Tone Arm Lift Lever Assembly
66366 Tone Arm Crank and Clamp Assemby
66359 Spindle Gear and Bracket Assembly.
99-12- 1 8-32 Hex Nut
99-13- 3 10-24 Hex Nut
99-13- 5 10-32 Hex Nut
99-18-19 6-32x $\frac{1}{16}$" RHM Screw
99-19-13 8-32x ¾" RHM Screw
99-20- 5 10-24x ½" RHM Screw
99-20-45 10-24x2" RHM Screw
99-26-15 10-32x ½" RHM Screw
99-34-11 Hair Pin Cotter Key
99-34-12 Washer—¾" ODx$\frac{1}{16}$x$\frac{17}{64}$ TH
99-36-14 Washer—⅞" ODx⅜x$\frac{1}{16}$
7344–1 Gauge for Adjusting S-30
63119 Record Lowering Link Assembly, Complete
64213 12" Record Support and Shaft Assembly, Complete
34311 Shelf Pin 10"-12" Front and Rear Record Support Assembly
66351 Friction Trip Assembly, Complete
4949 Felt Washer for Motor Spindle
54109 Spindle Support Bracket
6287 Motor Spindle and Gear Assembly

Fig. 94

3869 Main Cam
6287 Spindle and Gear Assembly
34309 Main Cam Starting Pin
34310 Record Centering Pin
35102 Motor Spindle Gear
37140 Motor Spindle
39226 Starting Lever Release Spring
46288 Starting Lever
64215 Starting Lever Release Trip and Hub Assembly
66359 Spindle Gear and Bracket Assembly

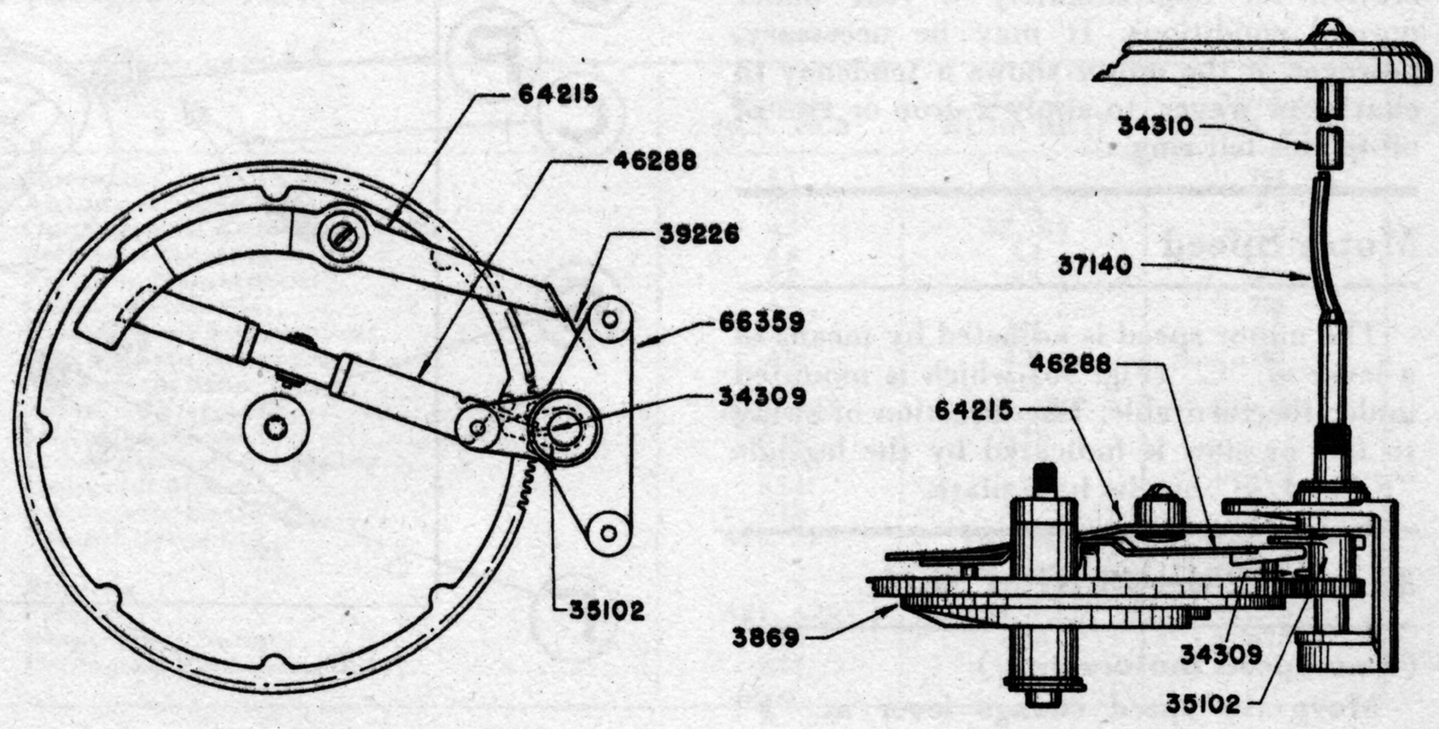

Magnavox—Model G 1

SERVICE

Operating Instructions

This record changer plays seven 12″ or eight 10″ records automatically. The last record remains on the turntable and repeats as long as the record changer is in operation.

Records may be repeated as often as desired by raising the record removing arm at "A" (Fig. 95) to the upright position.

To reject a record and play the next record below it, pull the latch lever at "L" (Fig. 95) forward.

To adjust the record moving arm to handle 10″ records set the record removing arm change lever at "D" (Fig. 95) opposite the number 10 stamped on the base plate. For 12″ records set the lever opposite the number 12.

To adjust the pickup to play 10″ records, push the pickup stop at "K" (Fig. 95) back. (Away from the pickup needle.) For 12″ records pull the stop forward (toward the needle) as far as it will go.

Some units are equipped with two speed motors, and others with 78 rpm motors. When the two speed motor is used change from one speed to the other by simply moving lever at "F" (Fig. 95) to position desired.

To start motor, throw switch (supplied on same models) at "N" (Fig. 95) on the "on" position.

Motor Lubrication

The motor installed in the record changer is governor controlled, with all gearing enclosed, and leaves the factory lubricated for proper operation. For maximum satisfaction, lubricate the motor at regular intervals with SAE No. 10 oil. Do not use any other grade of oil.

The governor disc engages with a ring of hard felt. This felt is impregnated with a lubricating solution sufficient for proper operation for approximately a year under normal conditions. It may be necessary, however, if the motor shows a tendency to chatter or waver, to apply a drop or two of oil to this felt ring.

Motor Speed

The motor speed is adjusted by means of a lever at "C" (Fig. 95) which is mounted under the turntable. The direction of swing to fast or slow is indicated by the legends "F" and "S" on the base plate.

33 1/3 RPM—78 RPM Shift

(Two-speed motors only)

Move the speed change lever at "F" (Fig. 95) as far as it will go in the direction of swing indicated by the legends "33⅓" and "78" on the base plate.

If adjustment of the speed change lever is required for any reason, proceed as follows: First loosen the screw which clamps the lever to the motor shaft. This shaft is provided with a screw-driver slot in the end. Next, using a screw driver, turn this shaft in a clockwise direction until you feel it strike the stop. The motor is now in the "33⅓" Rpm. position. Now set the lever against the lug provided in the base plate and opposite the legend "33⅓" and tighten the clamp screw. This places the lever in the correct position on the motor shaft. The final step is the adjustment of the eccentric bushing at "G" (Fig. 95) which limits the throw of the lever. First loosen the screw which holds the eccentric bushing. Next, throw the speed change lever to its farthest "78" Rpm. position, (using care that the lever does not slip on the motor shaft). Then turn the eccentric bushing around until it touches the side of the lever, and tighten it in place with the screw provided.

Trip Mechanism

The trip mechanism is the trigger that sets the record changer in motion. This is done by allowing the latch bar at "O" (Fig. 95) to drop in front of, and be actuated by the cam at "P" (Fig. 95). This cam is driven by the motor and is in motion as long as the motor is running. If this mechanism does not operate smoothly, the precautions outlined in succeeding paragraphs should be observed.

First of all, make sure that the square pin in the latch lever at "U" (Fig. 95) latches properly in the notch in the lift lever at "I" (Fig. 95). When latched, the notch should be engaged approximately one-half of its depth. The depth of engagement is adjusted by means of the eccentric washer and locking screw at "J" (Fig. 95). Now run the record changer through its cycle. If the square pin fails to engage the notch in the lift lever, first check the tension of the latch spring at "H" (Fig. 95) to insure that the notch can engage the pin. Next check the tension of the reset spring at "E" (Fig. 95). This reset spring should not be under tension when the latch bar is latched but should have enough tension when the latch bar drops back off of the cam to cause the square pin to over travel the notch in the lift lever. IMPORTANT—Before attempting to change the tension of any spring, be sure that the parts involved work freely without any tendency to bind, as of course any binding condition would preclude proper operation.

The record changer is adjusted at the factory to trip on a spiral trip groove record when the phonograph needle is 1¾″ from the edge of the hole in the center of the record.

When eccentric or oscillating trip groove records are used, tripping is effected by

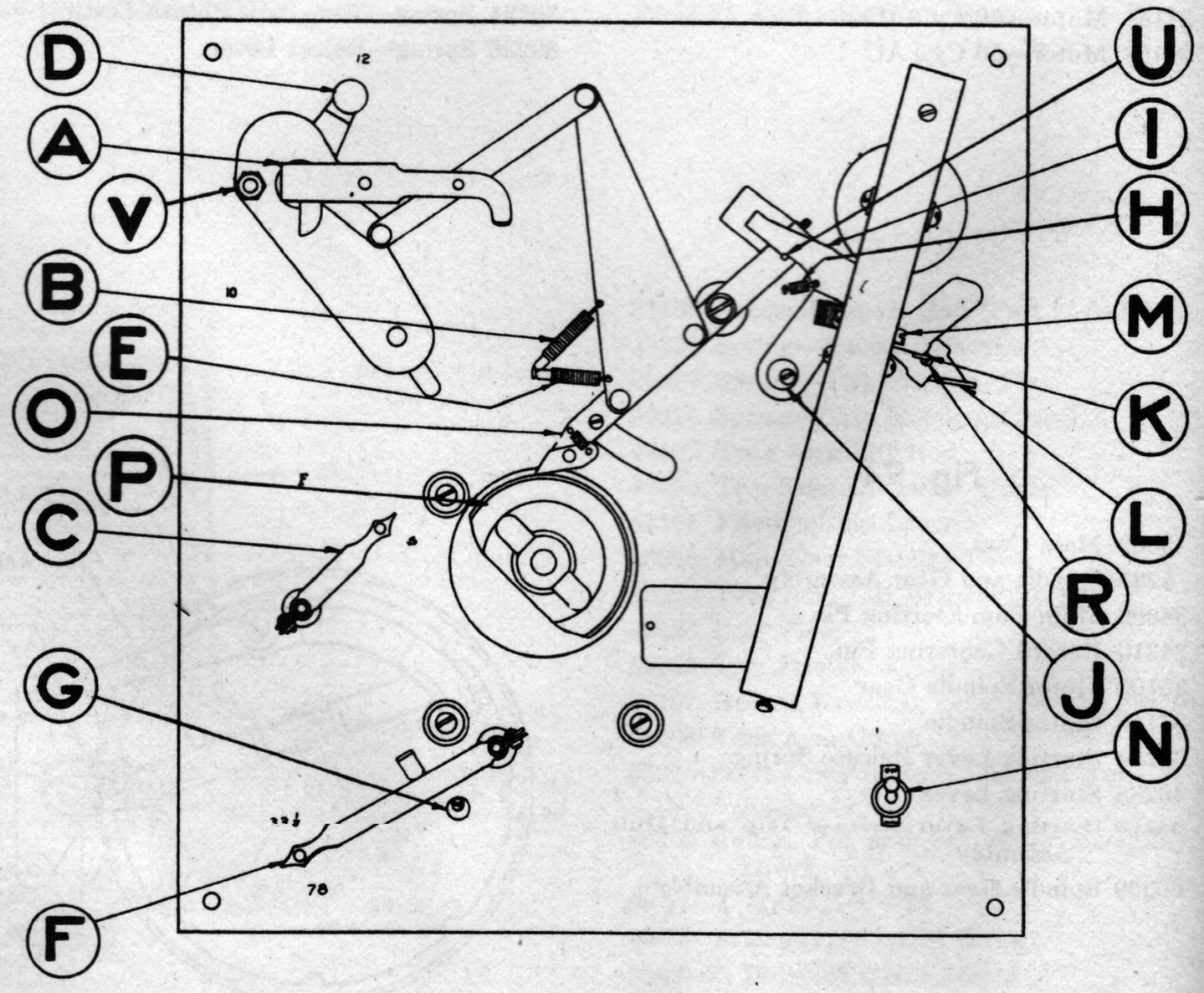

FIG. 95

means of the hardened steel pin in the end of tone arm lift crank at "S" (Fig. 96) engaging the serrated block on the trip lever at "T" (Fig. 96). There must be a minimum of $\frac{1}{32}''$ play between the end of the pin and the block, when, with a short needle, ($\frac{5}{8}''$ minimum length) the pickup is resting on one record on the turntable. If the pressure of the pin on the block is not sufficient to insure operation, then check the pressure spring which is located up under the pickup.

The oval head pivot screw at "R" (Fig. 95) serves as a pivot for the lift lever at "I" (Fig. 95). This screw should allow the lift lever to be raised by the latch bar to its

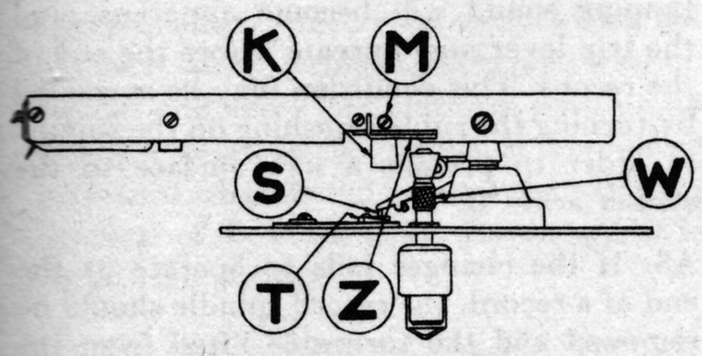

Fig. 96

maximum height without binding but also without any additional play.

If the record changer fails to trip, see if the phonograph needle is jumping out of a worn record trip groove. Next make certain that all parts of the mechanism work freely and smoothly. If it is found that the latch bar at "O" (Fig. 95) is not dropping in far enough to engage the cam at "P" (Fig. 95), then check the tension of the trip spring at "B" (Fig. 95).

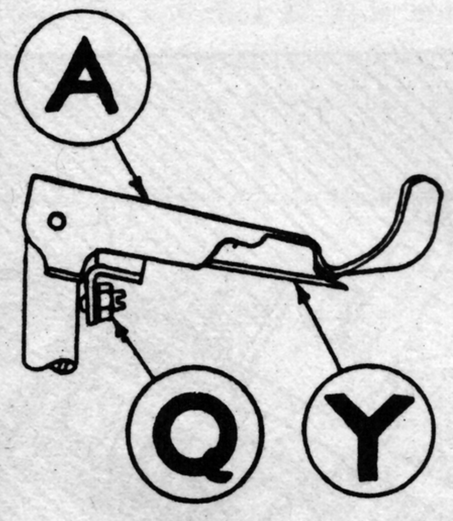

Fig. 97

Record Removing Mechanism

The record changer is adjusted so that it will always leave one record on the turntable. This is done to prevent the phonograph needle from damaging the covering on the turntable.

In case the record removing mechanism fails to operate smoothly, proceed as follows: First make certain that all parts work freely with no binding in pivots or bearings, and that the record removing arm assembly rests on the stop screw at "Q" (Fig. 97). Next stop the motor in such a position that the latch bar at "O" (Fig. 95) can swing by and clear the cam at "P" (Fig. 95). Place just one record on the turntable and measure from the top of this record down to the base plate. This distance should be one inch. Now by pulling the reject lever at "L" (Fig. 95) first, it will be found possible to swing the record removing finger at "Y" (Fig. 97) over to where it just touches the edge of the record. If the adjustment is correct, the record removing finger should just barely rise over the edge of the first record. If adjustment is required it can be made by means of the stop screw at "Q" (Fig. 97). In the event the record removing arm raises the record from the turntable and drops it back in place without removing it, check the lift adjustment at "V" (Fig. 95). This adjustment consists of an eccentric stud which is provided with a locknut, and is made by loosening the locknut and turning the eccentric stud. The lift adjustment should be set so that the hole in the center of the record just clears turntable spindle when the record changer is in operation.

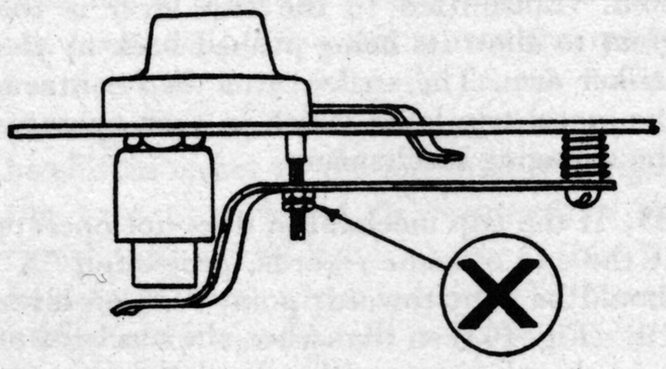

Fig. 98

Pickup Lowering Mechanism

The pickup lowering mechanism has two functions. First, it lowers the phonograph needle gently to the surface of the record. Second, it feeds the needle toward the center of the record so that it will enter the playing groove.

If the pickup descends too fast or too slow, adjust the speed of descent by turning the knurled thumb nut on the dashpot sleeve at "W" (Fig. 96).

The unit is adjusted at the factory so that the needle will be set down approximately $\frac{3}{32}''$ in from the edge of the record. An adjusting screw is provided on the side of the pickup at "M" (Fig. 96). If the needle is being lowered onto the playing surface of the record, and the adjusting screw at "M" (Fig. 96) fails to correct the condition proceed as follows: First stop the record changer, with the pickup in the maximum raised position and check the clearance between the underside of the pickup shelf at "Z" (Fig. 96) and the tip of the dashpot. This clearance should be very small as otherwise the pickup will tend to bounce as it is lowered. There must be sufficient clearance however to prevent the pickup shelf from rubbing on the tip of the dashpot, or the pickup will not swing out far enough to allow the adjustable stop at "K" (Fig. 96) to come to rest against the dashpot. Check this clearance in both 10″ and 12″ record positions. If adjustment is required, the height of the dashpot may be regulated by loosening the nuts on the bottom of the lift lever stud at "X" (Fig. 98) and changing their position on the stud. To raise the dashpot turn the nuts clockwise, to lower the dashpot turn the nuts counterclockwise. Be sure to lock the nuts tightly together after the adjustment is made.

Models RC5, RC8, RC10, RC11, RC50, RC51, (Garrard)

Similarity of service and illustrative material for these models has made it possible to combine certain portions of the text for more rapid reference. A table has been prepared to indicate the correct portion of the text for each model.

If, for instance, it is desired to study the service methods for adjusting speed on the model RC8, simply look under "Speed Adjustment"—follow this column until it intersects the column headed RC5, RC8 and the reference is found to be paragraphs A10, and A11.

	Models RC5, RC8	Models RC10, RC11	Models RC50, RC51
Operating Instructions	A1	A1	B1
Automatic Trip	A2	A2	A2
Operation of Automatic Trip	A3	A3, B3	A3, C3
Striker Adjustment	A4	A4	A4
Friction Adjustment	A5	A5	A5
Oversize Records	A6	.....	B6
Pickup Arm Adjustment	A7	B7	A7
Pickup Arm Adjustment	A8	C8	B8
Automatic Stop	A9	B9	A9
Speed Adjustment	A10, A11	A10, B11	A10, B11
Irregular Speed	A12	A12	.....
Lubrication of AC Motor	A13	A13	A13
Universal Motor	A14	A14	A14
Automatic Switch	A15	.....	C3
Record Dropping	A16, A19	B16, A19	A16, A17, A18, A19
Binding	.....	.....	A20
Pickup	A21, A22	A21, C22	A21, B22
Removing Changer	A23	C23	B23
Replacing Tone Arm Base	A24	.....	.....

A1. This record changer plays eight 12″ records or eight 10″ records (not intermixed) automatically, and the changer stops operating after the playing of the last record. A record may be rejected before playing the entire selection by turning the right-hand knob on the motorboard to the REJECT position.

To operate the changer, first turn the left-hand knob on the motorboard so that the indicator is pointing to the 10″ or the 12″ designation, depending on the size of the records to be played. With the record spindle in position—angling section toward the record platform—place from one to eight records of either the 10″ or 12″ type on the record spindle. Rotate the right-hand knob on the motorboard to the START position, placing the changer in operation.

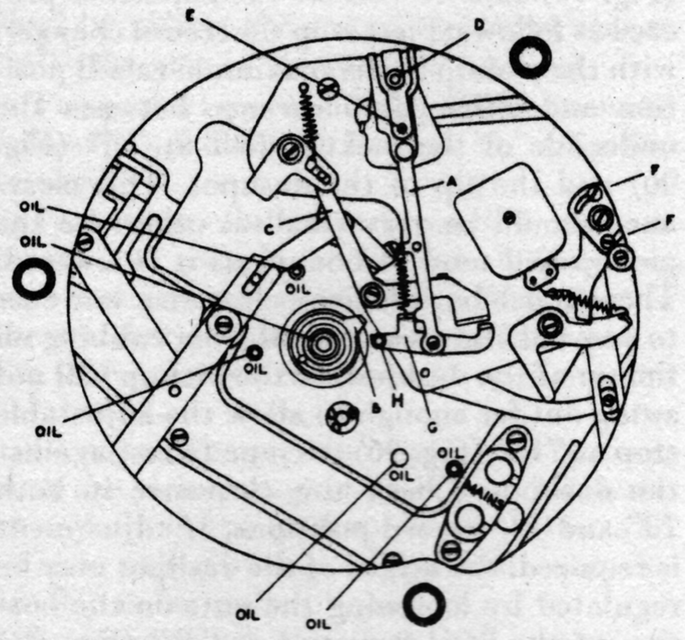

FIG. 99

B1. Models RC-50 and RC-51 play eight 10″ and 12″ records, intermixed in any order, automatically, and the changer stops operating after the playing of the last record. A record may be rejected before playing the entire selection by turning the motorboard knob to the REJECT position.

To operate the changer, raise the forked arm and place any number of records—not exceeding eight—on the record spindle and lower the forked arm until it rests on the top record. Turn the pickup head one-half turn in a counter-clockwise direction and insert a phonograph needle, returning the pickup to its normal position. The needle should be inserted only when the arm is located on the rest, as movement of the arm when it is in any other position may affect the mechanism.

Turn the motorboard knob to the START position, setting the changer in operation. Be sure to hold the knob in this position until the motor has started and becomes engaged with the changer mechanism. Should the changer be stopped for any reason during the record changing, it may be necessary to give it help in restarting by turning the turntable by hand, due to the excessive load imposed on the motor when it is stopped in such a position. If it is desired to stop the motor at any time, it may be done by rotating the motorboard knob to the STOP position.

A2. The automatic trip plays an important part in the operation of the record changer, and upon the certainty of the automatic trip coming into action depends the whole operation of the record changer. The automatic trip mechanism will operate on all makes of records having a "run-off" groove, either eccentric or spiral.

A3. The trip lever "A" (Fig. 99) is connected to the pickup arm through a series of levers and is moved forward towards the main spindle a distance proportional to the advance made by the pickup. The striker arm "B" (Fig. 99) is fitted on the main spindle in order to push back the trip lever, preventing the automatic trip from functioning while the record is being played. When the pickup reaches the end of the playing grooves and is carried into the "run-off" grooves, the movement transmitted to the trip lever is too great to allow its being pushed back by the striker arm. The striker arm then contacts the metal trip lever which in turn operates the changing mechanism.

B3. If the trip mechanism does not operate at the end of some records, projection "A" should be bent towards point "C" on lever "B" (Fig. 103) so that when the mechanism is in the playing position (and the changer stopped), the tone arm may be moved inwardly to a point where the needle is 1⅛″ from the edge of the motor spindle.

C3. If the automatic switch does not operate at the end of the last record, make certain that all of the levers are free and that all the springs are in place. Also make certain that the turntable spindle is free in the main spindle—it should move about ⅛″ when depressed and should rise the same distance when released. This test should be made while the changer is in the playing position. Switch tripping adjustment can be obtained by means of a small quadrant adjustment on the top of the spindle operated by lever "P" (Fig. 100).

A4. The correct functioning of the trip mechanism depends on the rubber bushing "H" (Fig. 99), on the trip lever arm "G." When the bushing becomes badly worn, a tapping sound will become apparent, and the trip lever may operate before the end of the record. This condition may be corrected by turning the rubber bushing on the spindle in order to present a new surface to the striker arm "B."

A5. If the changer fails to operate at the end of a record, the record spindle should be removed and the turntable lifted from the motor shaft so that the friction adjusting screw "E" (Fig. 99) may be readjusted. Before adjusting this screw it is advisable to make certain that the operating trip lever "A" is not rubbing on the base plate, setting up additional friction. To adjust the friction, give the friction adjusting screw "E" a small turn in a counter-clockwise direction to increase the friction. If the changer trips before the pickup has reached the end of the playing grooves, or if a bumping noise is heard in the speakers, the friction adjusting screw should be turned in a clockwise direc-

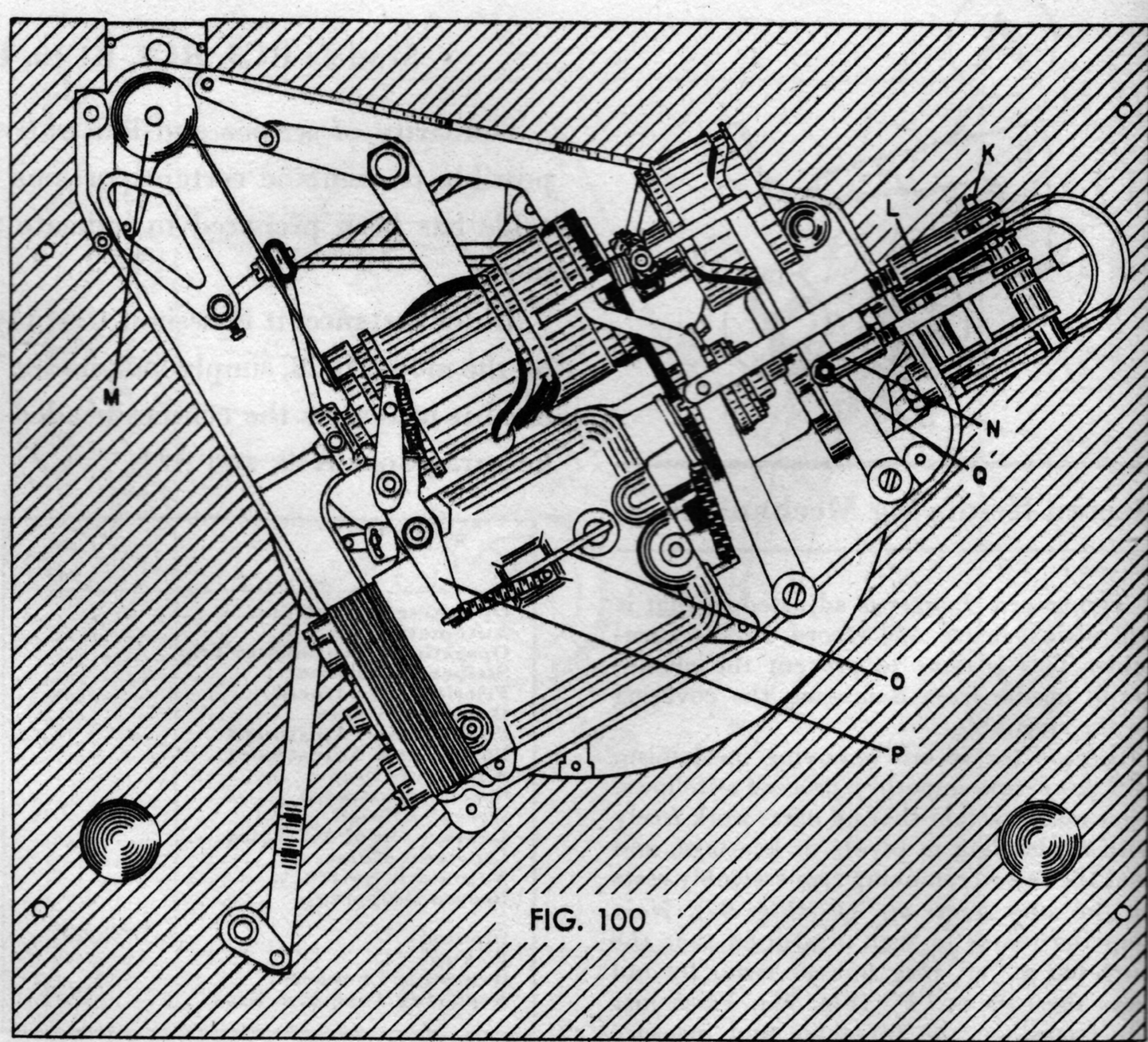

FIG. 100

tion to decrease the friction. This adjustment is very sensitive and the screw should be turned not more than a quarter of a turn at one time.

A6. The record platform, opposite the pickup arm on the motorboard, is normally adjusted to the correct position for all average records, however if a very large or small record is encountered, it may be necessary to make a slight adjustment to the platform position to accommodate these records. This is accomplished by removing the nut, washer, and screw "K" (Fig. 101A) and turning the bushing "L" clockwise to accommodate larger records, and counter-clockwise for smaller records. Replace the screw, washer, and nut and check the platform position by placing a record on the spindle. If it is correct the record edge should rest on the platform just clear of the studs when the changer is in the playing position.

B6. The record platform, opposite the pickup arm on the motorboard is normally adjusted to the correct position for all average records, however if a very large or small record is encountered, it may be necessary to make a slight adjustment to the platform position to accommodate these records. This is accomplished by removing the nut, washer, and screw "Q" (Fig. 100), and turning bushing "N" clockwise to accommodate larger records and counter-clockwise for smaller records. Replace the screw, washer, and nut, and check platform position by placing a record on the spindle. If it is correct the record edge should rest on the platform just clear of the pushing pawl, "12" (Fig 104), when the changer is in the playing position.

A7. Should the lowering position of the needle require adjustment, the turntable should first be turned by hand to bring the pickup from the loading position to the point where the needle has descended to within $\frac{1}{16}''$ of the record. The screw "R" (Fig. 102) which is accessible through a hole in the motorboard, should be turned either to the right or to the left according to the requirements—a quarter turn in either direction will give the maximum adjustment obtainable. The adjustment should then be checked by operating the changer and noting the lowering position of the pickup.

B7. Should the lowering position of the needle require adjustment, the turntable should first be turned by hand, after the STOP-START lever has been set to the START position, to bring the pickup from the loading position to the point where the needle has descended to within $\frac{1}{16}''$ of the record. If it is seen that the lowering position must be shifted either to the left or to the right, the tone arm should be returned to the "rest" position by hand, at which time the adjustable screw, which is accessible through a hole in the motorboard near the tone arm base, should be turned either to the right or to the left according to the requirements—a quarter turn in either direction will give the maximum adjustment obtainable. The adjustment should then be checked by operating the changer and noting the lowering position of the pickup.

A8. When making adjustments to the pickup arm, it should never be forced into position, and when the turntable is turned by hand it should never be turned other than in a clockwise direction. If the pickup is lowered so that the needle contacts the smooth surface of the record and does not run into the playing grooves, check to make certain that the motorboard is tilted slightly to the left. Then check the lead to the pickup, making certain that it is not twisted in any way to prevent free movement of the tone arm. Also check levers "S" and "Q" (Fig. 102) to see that they are free and that the pin at the end of lever "Q" is not rubbing on the bottom of the cam grooves. If required, the pickup height can be adjusted by loosening the set screw in the counter-balance weight "M" (Fig. 100), and turning the weight while holding the spindle. If this adjustment is changed, see that the tone arm lifts high enough to clear eight records on the turntable.

B8. If, after the playing of the last record (when eight are played), the needle scrapes across the surface of the top record as the tone arm moves to its rest position, the pickup height must be adjusted in the following manner. Loosen screw "8" (Fig. 102), and rotate the counter-balance "7" a few turns in a clockwise direction. The adjustment should be such that at the completion of the last record, the pickup will move across the top record with the needle at least one-half inch above the surface of the top record. Tighten set screw "8", completing the adjustment.

C8. If the pickup is lowered so that needle contacts the smooth surface of the record and does not run into the playing grooves, check to make certain that the motorboad is level or tilted slightly to the left as adjusted at the factory. Then check the lead to the pickup, making certain that it is not twisted in any way to prevent free movement of the tone arm. If the needle scrapes across the surface of the last record at the completion of the playing of that record, the pickup height requires adjustment. Loosen the set screw in the collar at the bottom of the pickup arm, lift the spindle and turn the collar while holding the spindle. A few turns in a counter-clockwise direction should be sufficient. Tighten the collar set screw, completing the adjustment.

If the tone arm lowers to the record and then immediately returns to the rest, it is possibly due to the fact that the STOP-START lever at the right side of the motorboard is rubbing on the under side of the motorboard, preventing the clutch from disengaging. Bend the lever downward so that it operates freely.

A9. The record changer automatically stops after the last record has been played due to the fact that there is no longer any weight on the turntable spindle. The weight of a

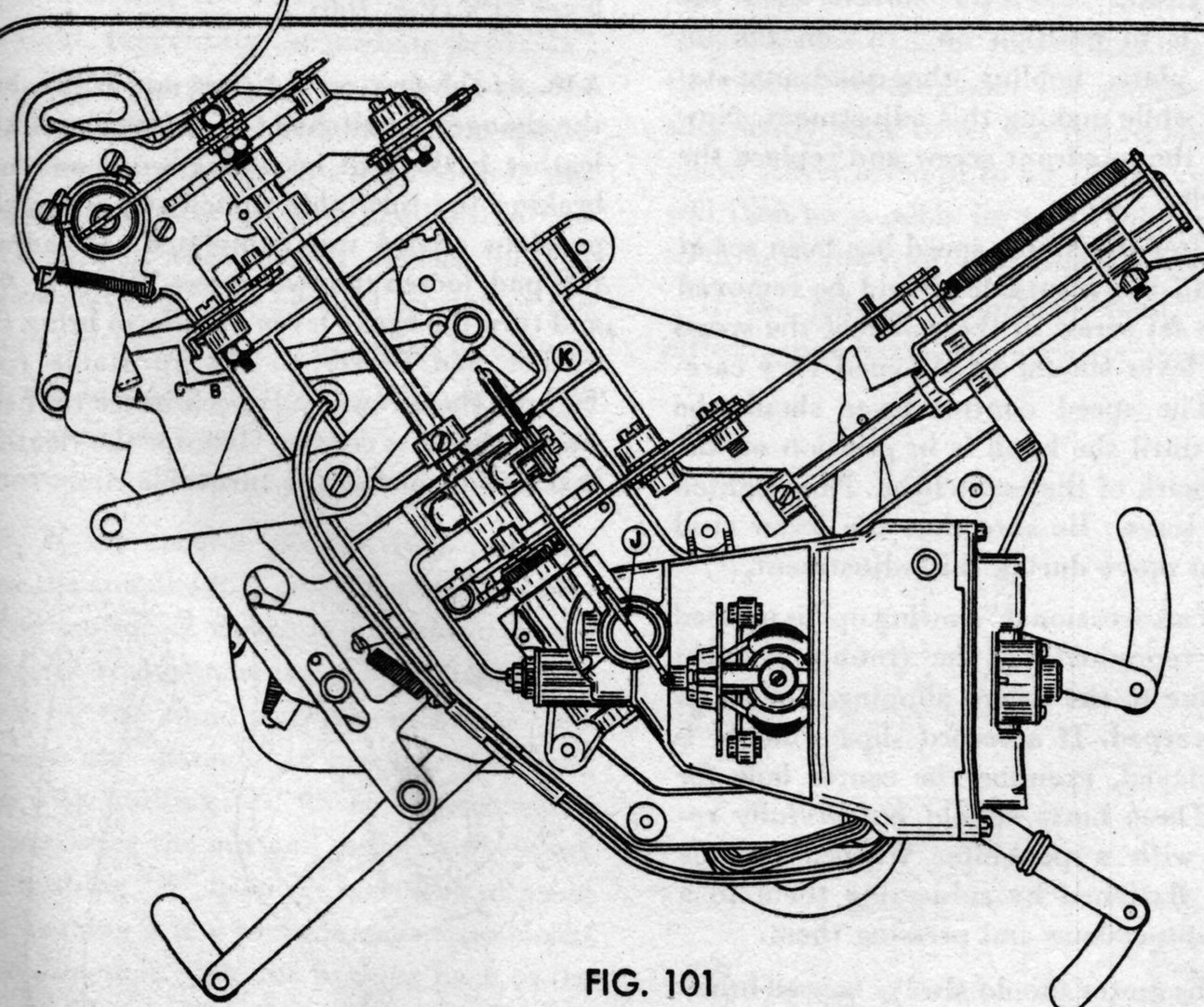

FIG. 101

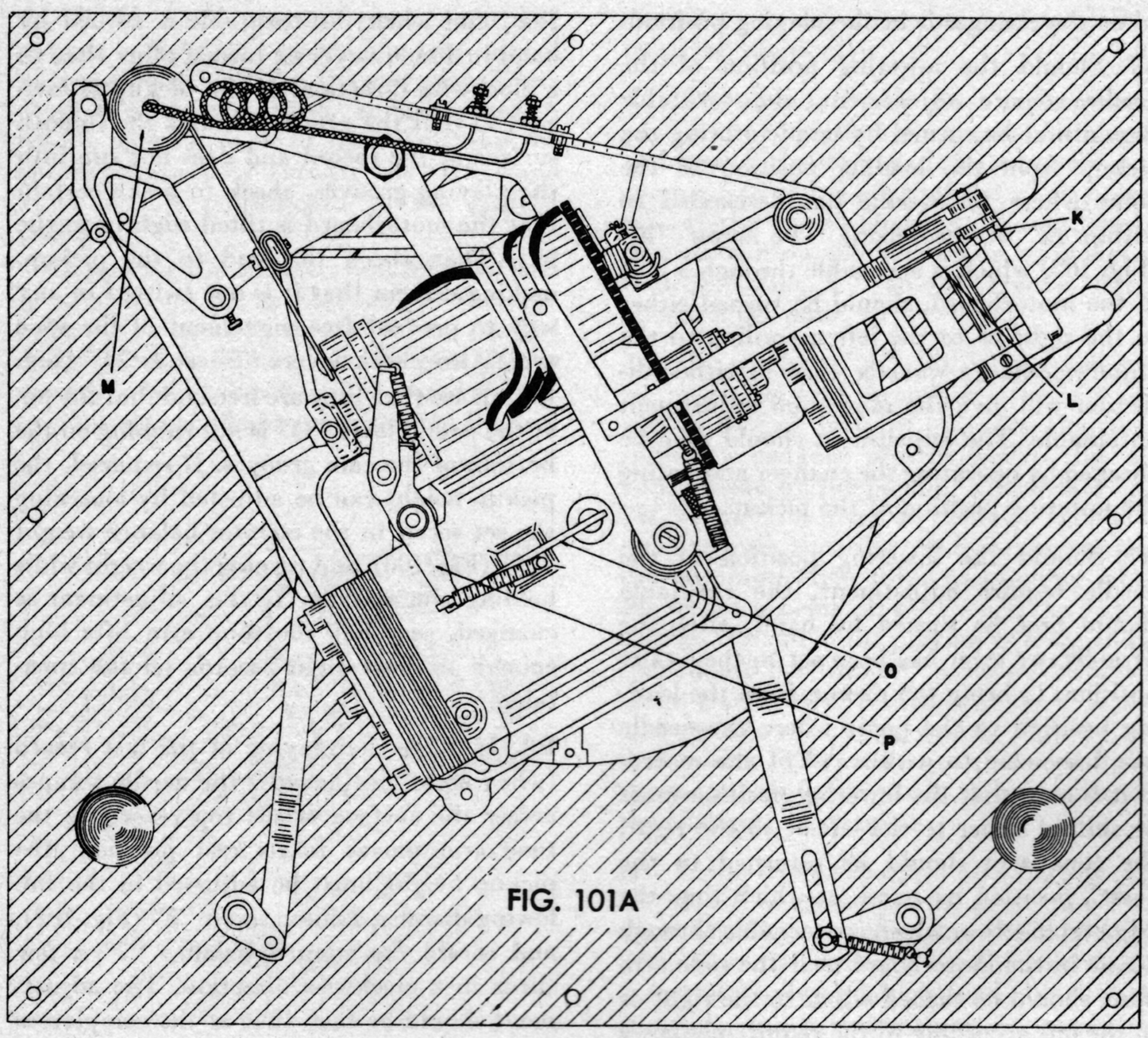

FIG. 101A

record on this spindle moves lever "O" (Fig. 100), which interrupts the movement of the switch lever "P" (Fig. 100) from the cam, so preventing the switch from operating. When the record is removed from the center spindle, the spindle raises and allows lever "O" to move so that it does not interrupt the switch lever "P," thereby allowing the switch to operate.

B9. The record changer automatically stops after the playing of the last record, due to the fact that there is no longer any weight on the turntable spindle. The weight of a record on this spindle moves lever "J" (Fig. 101), which interrupts the movement of the switch lever "K" (Fig. 101) from the cam, so preventing the switch from operating. When the record is removed from the center spindle, the spindle raises and allows lever "J" to move so that it does not interrupt the switch lever "K," thereby allowing the switch to operate.

A10. Due to the differences of line voltages in various localities, a slight adjustment of the speed indicator lever (that projects from the edge of the turntable) may be necessary. To make this adjustment, first set the motor speed to 78 Rpm., using the stroboscope disc (on AC models) furnished with the unit. To set the speed on the AC-DC unit, operating on direct current, place a piece of paper under a record on the turntable and count the revolutions in a period of 30 seconds. If there are more or less than 39 revolutions the speed adjustment lever should be moved a slight amount in the required direction, and the process repeated.

A11. After the motor has been set at 78 Rpm. the turntable should be removed and the quadrant screw (near the spindle on the speed-control lever) should be loosened very carefully and the lever moved until the pointer is in position on "78" on the indicator plate, holding the quadrant stationary while making this adjustment. Now tighten the quadrant screw and replace the turntable.

B11. After the motor speed has been set at 78 Rpm., the turntable should be removed and the set screw in the collar of the speed control lever should be loosened very carefully. The speed control lever should be moved until the knob is in position on the center mark of the escutcheon. Now tighten the set screw. Be sure that the screw stud does not move during this adjustment.

A12. If an occasional "slowing up" is noticed in the reproduction, the trouble is most likely due to the record slipping, due to its being warped. If a record slips while it is being played, examine the center hole for burrs. These burrs should be carefully removed with a penknife. Warped records may be flattened by subjecting them to a warm temperature and pressing them.

A13. The motor should always be well lubricated, as noise will develop if the bearings are allowed to run dry. All bearings are of the oil-retaining type, and with average use will require lubrication about once every three months. All oiling holes are accessible when the turntable is lifted from the motor spindle and are indicated on Fig. 99. A few drops of fine oil may be helpful in the tone arm pivot, if the tone arm shows signs of sluggishness in moving into the playing grooves after it has lowered to the record.

A14. The lubrication and speed adjustment for the universal (AC-DC) motor is the same as for the AC motor. If the brushes are allowed to become dirty and worn, brush noise will develop. The brushes may be removed by unscrewing the bakelite caps on the motor body and pulling out the brushes by means of the springs. The brushes can be cleaned by sanding them with a fine grade of sandpaper or crocus cloth and cleaning the dust from the surface before replacing them. It is important that the brushes be replaced in the same way in which they were originally installed. The brushes when new are $\frac{9}{16}''$ long under the springs—when they have worn down to $\frac{3}{8}''$, they should be replaced.

A15. If the automatic switch does not operate at the end of the last record, make certain that all of the levers are free and that all the springs are in place. Also make certain that the turntable spindle is free in the main spindle—it should move about $\frac{1}{8}''$ when depressed and should rise the same distance when released. This test should be made while the changer is in the playing position. Switch tripping adjustment can be obtained by means of a small quadrant adjustment on the top of the spindle operated by the switch lever "P" (Fig. 100).

A16. If the first record does not drop when the changer is switched On, this is due to the leather brake pad becoming worn and not braking the turntable sufficiently when the previous record was completed. To adjust this pad, loosen the two screws "F" (Fig. 99) and turn the brake lever slightly to bring the leather pad nearer to the turntable rim. Tighten the screws and check to see that the switch breaks contact before the leather brake pad touches the turntable rim.

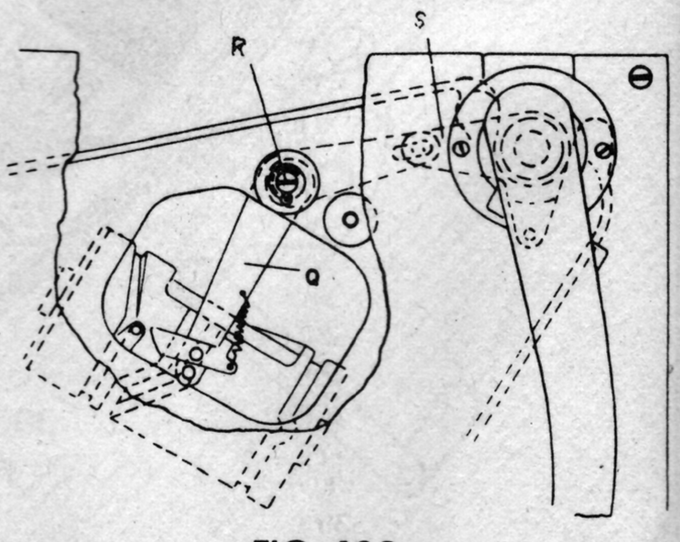

FIG. 102

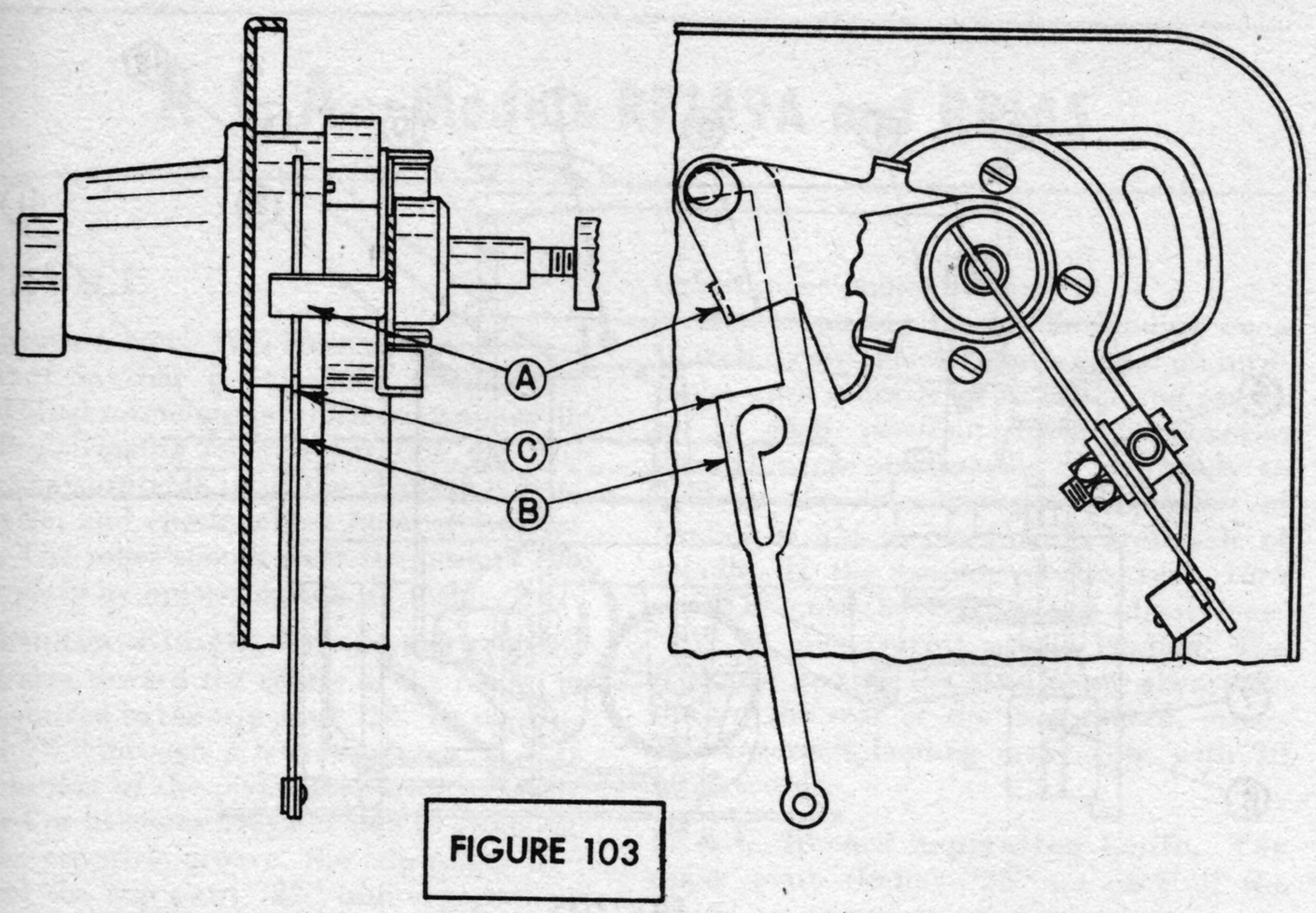

FIGURE 103

BEND LEVER "A" SIDEWAYS TOWARD "B" APPROXIMATELY 1/16" AT THE SAME TIME BEND IT OUT SO THAT IT CONTACTS "B" NEAR THE CORNER "C".

B16. If the first record does not drop when the changer is switched On, this is due to the leather brake pad becoming worn and not braking the turntable sufficiently when the previous record was completed. To adjust this pad, loosen the screw "F" (Fig. 99) and turn the brake pad slightly to present a new surface to the turntable rim. Now tighten the screw "F" and check the adjustment.

A17. If the records do not drop properly, it is possible that the forked arm is sprung to the right, preventing the pushing pawl "12" (Fig. 105) from pushing the records from the platform. To correct this condition, spring the forked arm to the left a slight degree and check to make certain that the bottom record contacts the smooth surface of the record platform. The vertical motion of the record platform may be controlled by adjusting the bushing "L" (Fig. 100), after the nut, screw, and washer at "K" have been removed.

A18. If the records do not feed properly from the spindle, it is possible that the horizontal motion of the record platform is not sufficient to push the lower record from the stack on the spindle to the turntable. To increase the distance of motion, the lever arm with bushing "N" must be lengthened by removing the nut and screw "Q," sliding the bushing "N" from the lever and rotating the bushing a few turns in a counter-clockwise direction. Slide the bushing back to the lever and install the nut and screw "Q" in place. Now check the adjustment by operating the mechanism. If the motion of the platform is still not sufficient to push the records to the turntable, the bushing should be turned a few revolutions to further lengthen the lever arm, however, it is not probable that a second adjustment will be required.

A19. Occasionally a record may stick to the spindle and not drop to the turntable as it should. The record may be excessively thick and must be removed from the stack. The reason for the "thick" record sticking is that the slot at the angle in the spindle is not sufficiently wide to let the record slide into place. Never attempt to file this groove as it will then be possible for two "thin" records to drop to the turntable at one time.

If the spindle should be bent, it will either cause records to stick, or more than one record to feed to the turntable at one time, depending on the direction of the bend. Extreme care should be used in bending the spindle back into position, should this become necessary, as it may be broken very easily.

A20. If the mechanism should bind during operation, it may be possible to free it by depressing the pushing pawl "12" (Fig. 105) and allowing the pickup to come to the rest position. Turn off the motor and slide the nameplate that covers the mechanism in the record platform from its holder, exposing a small set screw in a stop lever. Loosen the set screw and move the stop forward a slight amount. Tighten the set screw and check the adjustment. If the mechanism still binds, the stop lever should be advanced a little more. This position is quite critical and the lever should not be moved more than $\frac{1}{32}''$ during each adjustment. If the mechanism should bind as a result of the turntable being rotated manually, it is probably caused by the fact that the motor end-bearing has been forced from its correct position in the end of the motor frame, allowing the motor governor set screws to strike the main gear of the motor. To correct this condition, loosen the small set screw that holds the motor end-bearing in place—located adjacent to the nameplate on the motor frame—press the bearing in as far as it will go, and tighten the set screw. This adjustment should permit the motor to operate properly, however, if it still binds it may be necessary to loosen this set screw again, rotate the end-bearing a fraction of a turn and tighten the set screw. This adjustment may be necessary to keep the spacing around the armature equal at all points.

A21. If the quality of reproduction is distorted, or if the volume of the signal is unusually low, it may be due to a defective

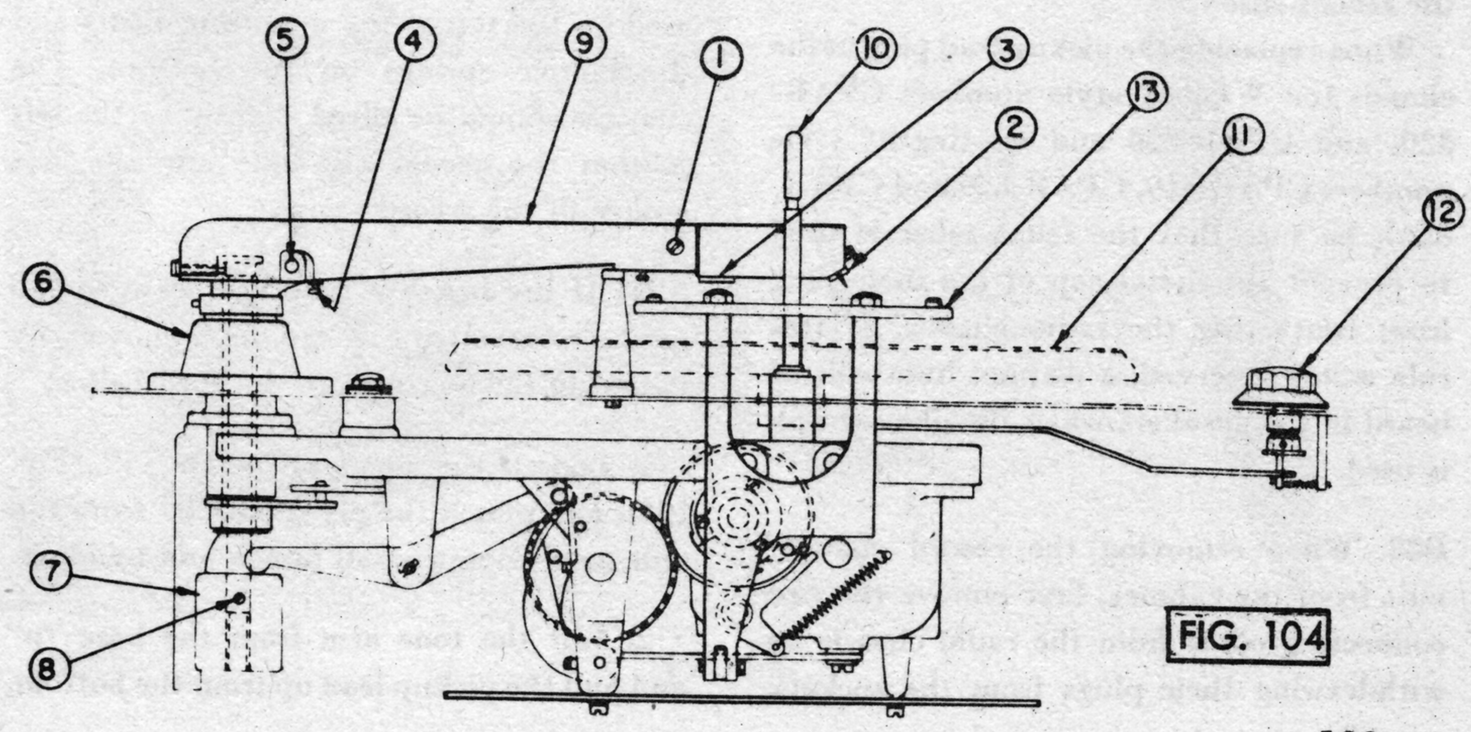

FIG. 104

crystal pickup. If no signal is heard when the pickup is used and the radio is operating properly, it is probable that the pickup lead is broken or shorted on the pickup arm.

A22. To remove the pickup cartridge assembly, remove screw "1" (Fig. 104) and pull the cartridge from the arm, examining the connections to the bakelite terminal block. To remove the cartridge from the assembly, remove the two retainer plates "2" and "3" (Fig. 104), and unsolder the pigtail connections from the bakelite block.

B22. To remove the pickup cartridge assembly, remove screw "1" (Fig. 105), and pull the cartridge from the arm, examining the connections to the bakelite terminal block. To remove the cartridge from the assembly, remove the two retainer plates "2" and "3" (Fig. 105), and slide the cartridge from the housing.

C22. To remove the pickup cartridge assembly, remove the four screws securing the cartridge retainer plate and pull the cartridge from the arm, examining the connections to the bakelite terminal block. Pull the plugs from the bakelite block to free the cartridge from the arm.

A23. When removing the record changer unit from the cabinet, first remove the two connecting cords from the radio chassis by withdrawing their plugs from the sockets. Disconnect the ground lead from the radio chassis by sliding the spade lug from the securing screw that has been loosened a few turns. Remove the nuts and springs from the four mounting screws and lift the unit from the cabinet. When replacing the mechanism, be sure that the heavier springs are used on the top of the mounting cleats and the lighter springs on the bottom. The changer should be tilted slightly to the left, so that the needle will slide into the first grooves of the record easily.

When replacing the pickup lead plug in the chassis (on Windsor style numbers CPAR-320, and CPAR-352 and on Regent style numbers CPAR-319, CPAR-329 and CPAR-356), be sure that the felt washer is used to prevent the metal cap of the male plug from contacting the radio chassis. If this rule is not observed, a distinct hum will be heard in the speakers when the phonograph is used.

B23. When removing the record changer unit from the cabinet, first remove the two connecting cords from the radio chassis by withdrawing their plugs from the sockets.

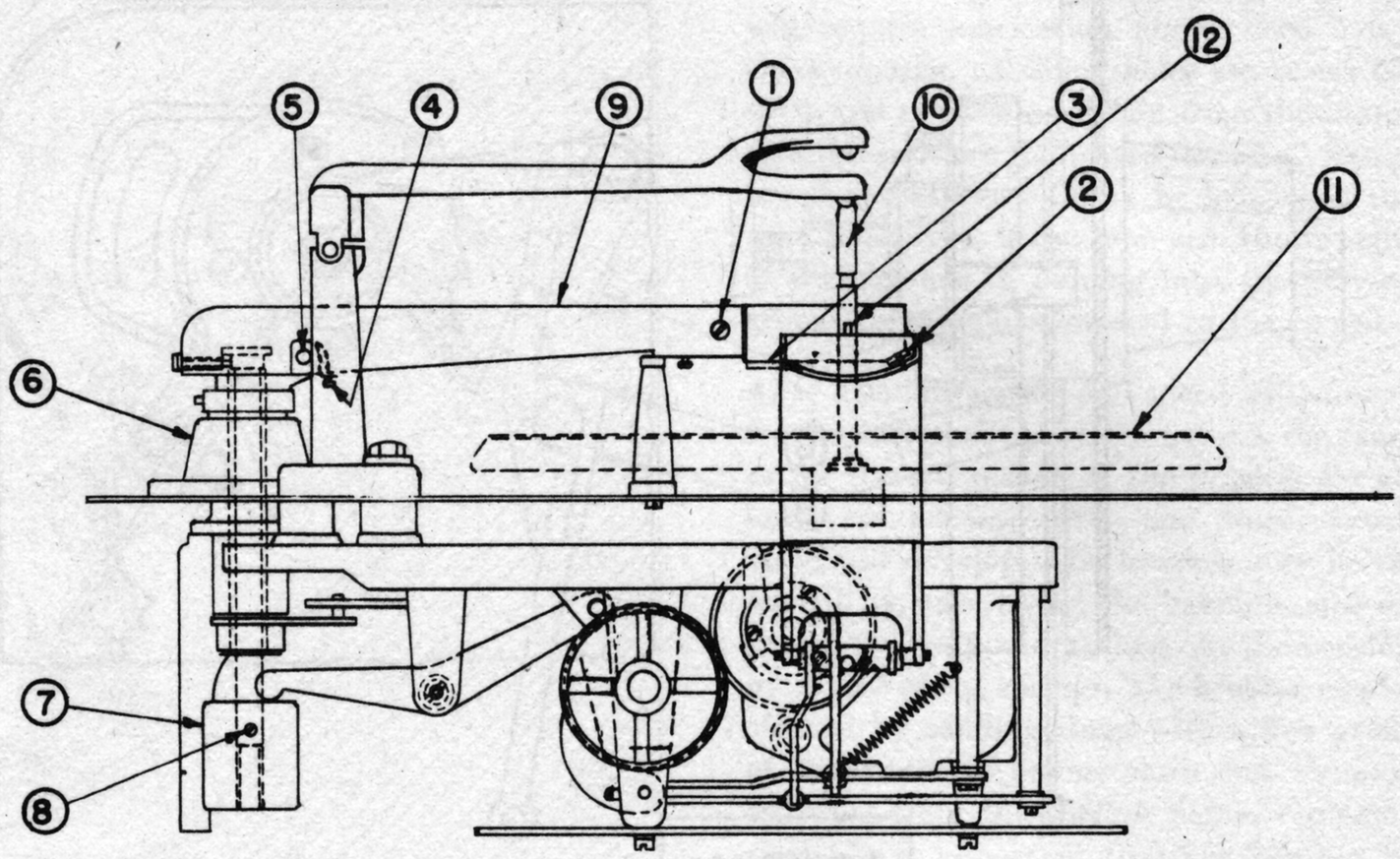

FIG. 105

Remove the nuts and springs from the four mounting screws and lift the unit from the cabinet. When replacing the mechanism, be sure that the heavier springs are used on the top of the mounting cleats and the lighter springs on the bottom, being careful to mount the unit so that the turntable is perfectly level.

C23. When removing the record changer unit from the cabinet, first remove the two connecting cords from the radio chassis by withdrawing their plugs from the sockets. If the metal motorboard of the changer is secured to a wooden sub-base and the entire assembly "floated," remove the nuts and springs from the four mounting screws in the wood sub-base and lift the unit from the cabinet. If the metal motorboard has been "floated" in the cabinet, remove the nuts and springs from the mounting screws and remove the changer in the same manner as described above. When replacing the mechanism, be sure that the heavier springs are used on the top of the mounting cleats and the lighter springs on the bottom. The changer should be tilted slightly to the left so that the needle will slide into the first groove of the record easily.

A24. If the bakelite tone arm base should need replacement, it can be removed by following the instructions outlined below:

1. Loosen the small set screw "4" (Fig. 104), and punch the pivot pin "5" from the tone arm using a small punch and hammer.

2. Lift the tone arm from the base "6" and pull the pickup lead up from the bottom, after the plug has been unsoldered from the lead.

3. Remove the two mounting screws that secure the tone arm base to the motorboard, and rotate the base until the large hole in the rear of the base is directly over a screw in the casting beneath the motorboard.

4. Remove the screw from the casting and rotate the base 180 degrees exposing another screw which should be removed from the casting.

5. Slide the assembly to the rear of the board, removing the lever pins from their guide slots.

6. Remove the counter-balance weight "7" by first removing the set screw "8" and then turning the weight in a counter-clockwise direction until it drops from the shaft.

7. Now loosen the set screws in the bushing "8" and remove the lever arm from the shaft, holding the assembly over a small box so that the ball bearings will not be lost.

8. Slip the casting from beneath the base, off the shaft and replace the bakelite base. There are fifteen bearings above and fifteen bearings below the base, that should be replaced before the assembly is reassembled.

9. Reassembly of the unit is not difficult, however the counter-balance "7" will require adjustment to allow proper lowering of the tone arm to the record. Instructions for this adjustment are given in paragraph A8.

R C A—Models RP139A and RP145

SERVICE

A. Main Lever. This lever is basically important in that it interlinks the various individual mechanisms which control needle landing, tripping, record separation, etc. Rotate the turntable until the changer is out-of-cycle; and check rubber bumper bracket (A). The roller should clear the nose of the cam plate by approximately $\frac{1}{16}$ inch.

B. Friction Clutch. The motion of the tone arm toward the center of the record is transmitted to the trip pawl "22" by the trip lever "7" through a friction clutch "5." If the motion of the pickup is abruptly accelerated or becomes irregular due to swinging in the eccentric groove, the trip finger "7" moves the trip pawl "22" into engagement with the pawl on the main gear, and the change cycle is started. Proper adjustment of the friction clutch "5" occurs when movement of the tone arm causes positive movement of the trip pawl "22" without tendency of the clutch to slip. The friction should be just enough to prevent slippage, and is adjustable by means of screw "B." If adjustment is too tight, the needle will repeat grooves; if too loose, tripping will not occur at the end of the record.

C. Pickup Lift Cable Screw. During the record change cycle, lever "16" is actuated by the main lever "15" so as to raise the tone arm clear of the record by means of the pickup lift cable. To adjust pickup for proper elevation, stop the changer "in-cycle" at the point where pickup is raised to the maximum height above turntable plate, and has not moved outward; at this point adjust locknuts "C" to obtain 1 inch spacing between needle point and turntable top surface.

D. & E. Needle Landing on Record. The relation of coupling between the tone arm vertical shaft and lever "20" determines the landing position of the needle on a 10 inch record. Position of eccentric stud "E" governs the landing of the needle on a 12 inch record; this, however, is dependent on the proper 10 inch adjustment.

To adjust for needle landing, place 10 inch record on turntable; push index lever to reject position and return to the 10 inch position; see that pickup locating lever "17" is tilted fully toward turntable; rotate mechanism through cycle until needle is just ready to land on the record; then see that pin "V" on lever "14" is in contact with "Step T" on lever "17." The correct point of landing is $4\frac{5}{8}$ inches from the nearest side of the turntable spindle; loosen the two screws "D" and adjust horizontal position of tone arm to proper dimension, being careful not to disturb levers "14" and "17." Leave approximately $\frac{1}{32}$ inch end play between hub of lever "20" and pickup base bearing, and tighten the blunt nose screw "D"; run mechanism through several cycles as a check, then tighten cone pointed screw "D."

After adjusting for needle landing on a 10 inch record, place 12 inch record on turntable; push index lever to reject and return to 12 inch position: rotate mechanism through cycle until needle is just ready to land on the record; the correct point of landing is $5\frac{5}{8}$ inches from nearest side of spindle. If the landing is incorrect, turn stud "E" until the eccentric end adjusts lever "14" to give correct needle landing. The eccentric end of the stud must always be toward the rear of the motorboard, otherwise incorrect landing may occur with 10 inch records.

F. & G. Record Separating Knife. The upper plate (knife) "25" on each of the record posts serves to separate the lower record from the stack and to support the remaining records during the change cycle. It is essential that the spacing between the knife and the rotating record shelf "27" be accurately maintained. The spacing for the 10 inch record is nominally .055 inch, and for the 12 inch record is .075 inch.

To adjust, rotate the knife to the point of minimum vertical separation from the record shelf and turn screw and locknut "F" to give .052—.058 inch separation. Screw "G" must not be depressed during this adjustment. After setting screw "F," adjust screw "G" so that when its tip is depressed flush with top of record shelf, the vertical spacing between the knife, in its lowest rotational position, and the shelf, is .072—.078 inch.

H. Record Support Shelf. The record shelf revolves during the change cycle to allow the lower record to drop onto the turntable. Both posts are rotated simultaneously by a gear and rack coupled to the main lever "15," and it is necessary that adjustment be such that the record is released from both shelves at the same instant. To adjust, place a 12 inch record on the turntable, rotate mechanism into cycle to the point where both separating knives have turned clockwise as far as the mechanism will turn them; lift record upward until it is in contact with both separating knives. Then loosen screws "H" and shift record shelves "27" so that the curved inner edges of the shelves are uniformly spaced approximately $\frac{1}{16}$ inch from the record edge. Some backlash will be present in the rotation of these shelves. They should be adjusted so that the backlash permits them to move away from the record but not closer than the approximate $\frac{1}{16}$ inch specified above. Tighten the blunt nose screw "H," run mechanism through cycle several times to check action, then tighten cone pointed screw "H."

If record shelves or knives are bent, or not perfectly horizontal, improper operation and jamming of mechanism will occur.

J. Tone Arm Rest Support (not shown). When the changer is out-of-cycle, the front lower edge of the pickup head should be $\frac{5}{16}$ inch above surface of motorboard. This may be adjusted by bending the tone arm support bracket, which is associated with the tone arm mounting base, in the required direction.

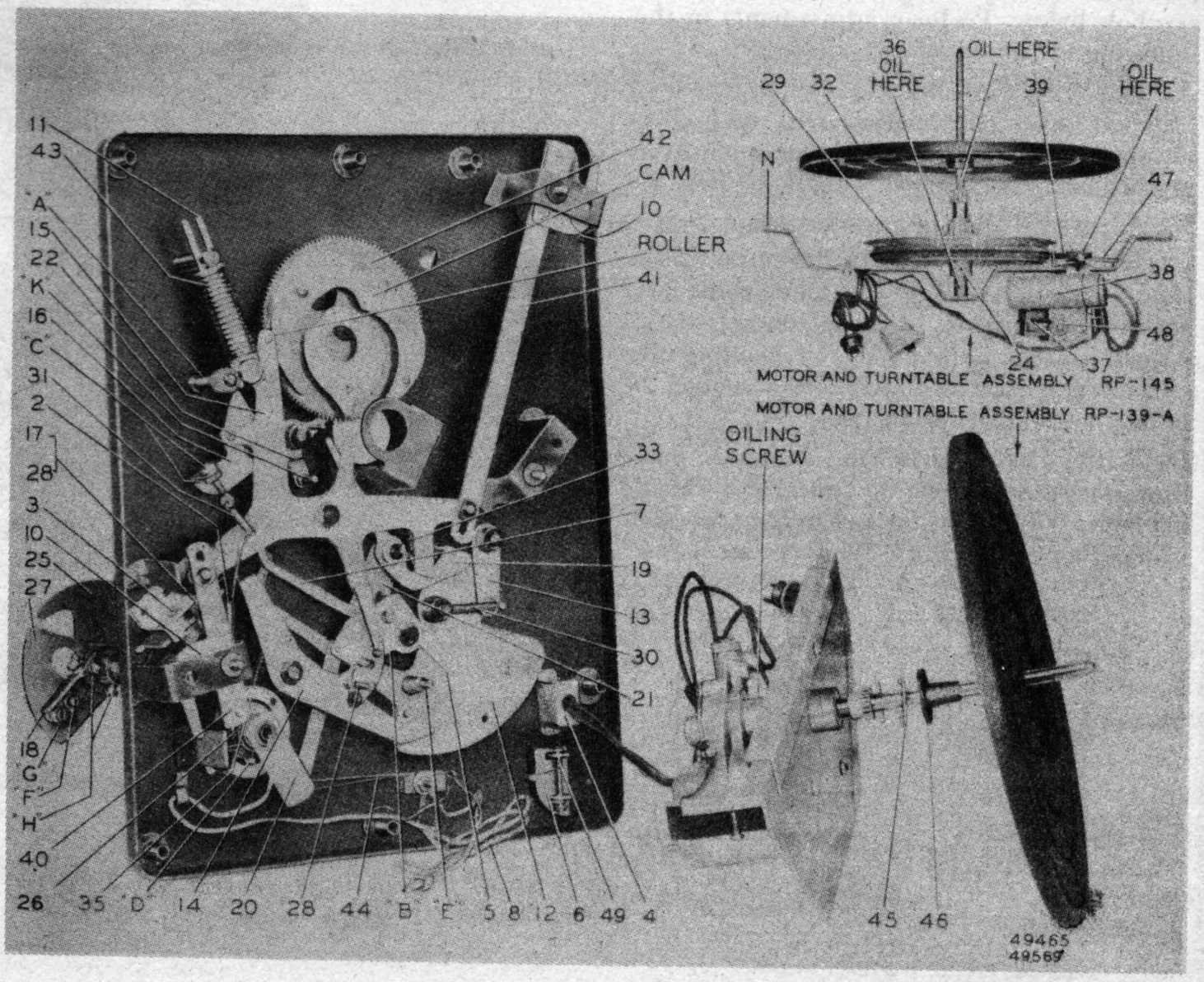

FIG. 106

K. Trip Pawl Shop Pin. The position of the trip pawl stop pin "K" in relation to the main lever "15" governs the point at which the roller enters the cam. By bending the pin support either toward or away from trip pawl bearing stud, the roller can be made to enter the cam later or earlier, respectively. This adjustment should be made so that the roller definitely clears the cam outer guide as well as the nose of the cam plate.

Lubrication. Petrolatum or petroleum jelly should be applied to cam, main gear, spindle pinion gear, and gears of record posts.

Light machine oil should be used in the tone arm vertical bearing, record post bearings, and all other bearings of various levers and pulleys on underside of motorboard. The turntable spindle bearing of RP-145 must be lubricated from the top of the motorboard. Using an oil can with a long spout, reach in between the turntable and motorboard and apply oil directly to the spindle.

On Model RP-139-A apply a few drops of light machine oil (SAE-10) to the motor oil hole adjacent to the spindle bearing after each 1,000 hours of operation. The oil hole has a screw plug.

Do not allow oil or grease to come in contact with rubber mounting of tone arm base, rubber bumper, rubber spindle cap, or rubber parts of friction drive mechanism of Model RP-145.

Model U109

RECORD CHANGER ADJUSTMENTS

Mount motorboard on a level support. Remove turntable and cover at right of turntable. Adjustment locations are designated on Fig. 108 as "A," "B," etc. The adjustments are explained under corresponding symbols below. Perform adjustments in the following order:

A. Trip rod "A" should be engaged in "Switch Lever" slot. Adjust trip rod "A" to obtain about ⅛ of an inch clearance from motorboard.

B. Adjust "B" to the position shown.

C. With "Index Lever" in "Manual" position, "Pickup Arm" rotated to extreme left, and switch tripped to open contacts "C," adjust contact points "C" by bending the stiff contact arm until points are opened 10 to 30 thousandths of an inch.

D. With "Index Lever" in "Manual" position, release set screw "D" and force "Manual Index Finger" as far as it will go towards "Trip Pawl Stop Pin." Tighten set screw.

E. Adjust at "E" to provide approximately $\frac{1}{32}$ of an inch between outer end of "Link Slot" and screw when rubber "Bumper" is in contact with stop bracket.

F. and G. Remove rubber silencer at "F" and adjust "F" and "G" so ejector tip "F" is in line with "Spindle." Longitudinal movement, with respect to "Ejector Arm," may be effected by loosening hex. head at "F." Lateral movement of "Ejector Arm" may be effected by adjustment "G."

H. Adjust "H" so under side of pickup head can be raised 2½ inches above motorboard.

J. Adjust screw "J" until friction will just force "Trip Finger" to move "Trip Pawl" when "Index Lever" is in "12" inch position.

N. Adjust needle pressure by turning screw under center of "Pickup Arm" so that a force of 72 grams (2.5 ounces) is required to lift needle from the record. Hook scale under needle screw to measure force.

K. Adjustment "N" must be performed prior to this adjustment. With a 12″ record on turntable, turn on "Motor Switch," place "Index Lever" to "12" position and adjust

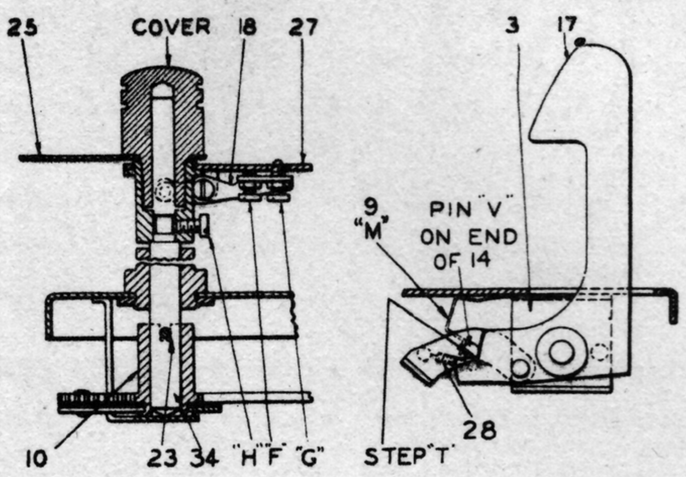

FIG. 107

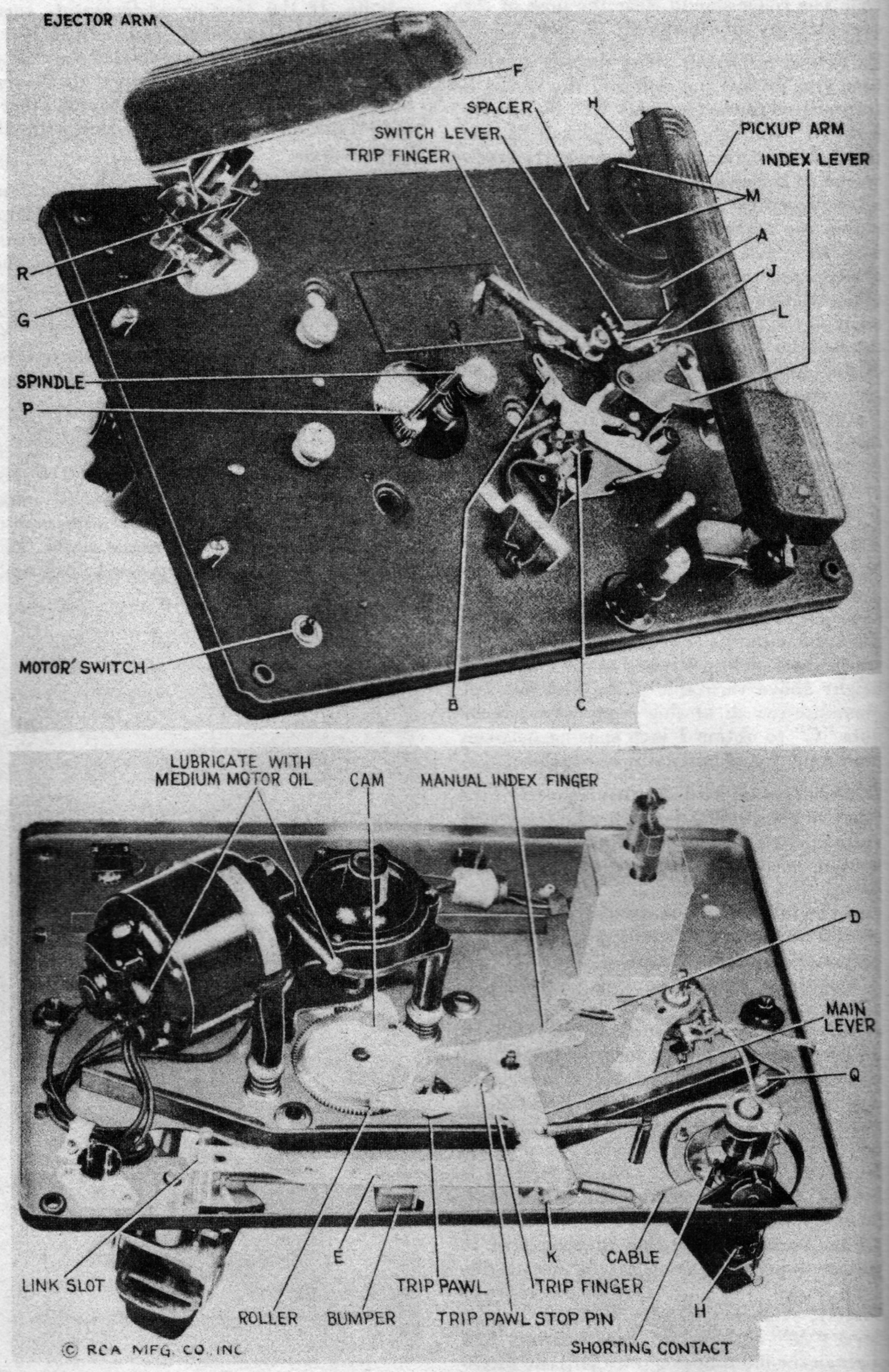

FIG. 108. AUTOMATIC RECORD CHANGER ADJUSTMENTS. (*Top and bottom views.*)

"K" so that "Cable" tension will allow needle to lower slowly on start of record at completion of eject cycle. Turn "Motor Switch" off after eject cycle is completed and check to see that "Cable" is slightly loose when "Pickup Arm" is moved against "Spindle." Replace turntable and put a needle in "Pickup."

L. Adjust "L" so needle will drop into center of smooth portion at the start of a 12″ record when "Index Lever" is in "12" inch position and "Pickup Arm" is to extreme right.

M. Loosen three screws "M" and rotate "Spacer" until pointer on "Spacer" is in line with screw to right of "Pickup Arm."

P. Adjust turntable height by insertion or removal of thrust washers at "P" so ejector will not eject bottom 12″ record but will eject second from bottom record.

Q. Adjust position of shorting switch at "Q" so switch closes when needle is just outside a 12″ record.

R. Adjust screw "R" upward just enough so that with one record on turntable and ejector tip "F" resting on record surface, there is $\frac{1}{32}$ of an inch clearance between screw "R" and "Ejector Arm."

RECORD CHANGER SERVICE HINTS

1. "Ejector Arm" goes through normal cycle but does not eject records. Adjust "F" and "G." See that "Spindle" slides freely.

2. Ejects bottom record. Lower turntable by removing thrust washers at "P."

3. Ejects records properly down to second from bottom of pile. Raise turntable by placing thrust washers at "P."

4. Eject cycle does not start after needle reaches eccentric groove. Adjust "J" (turn screw clockwise).

5. Eject cycle starts before eccentric record groove is reached. Adjust "J" (turn screw counter-clockwise). Set "Index Lever" to "12" inch or "10" inch position *after* starting to play record. Do not jar motorboard during automatic operation.

6. Lateral movement of "Pickup Arm" has no control over starting and stopping. Adjust clearance of rod "A." See that rod "A" engages in slot of "Switch Lever."

7. Fails to eject top record of a pile because "Ejector Arm" strikes record in returning to center at end of eject cycle. Adjust screw "R" upward to provide greater incline so that roller in "Ejector Arm" will roll back during cycle.

8. Pickup strikes record during eject cycle. Adjust "K" and "H."

9. Starts playing record several grooves in from beginning or needle misses record entirely. Adjust "L."

10. Needle falls on smooth portion at start of record but does not move into playing groove. Adjust "M." Check to see that motorboard is level.

11. Automatic stop does not operate after needle reaches eccentrc groove. Adjust "B" and "C."

12. Motor does not restart when "Pickup" is returned to rest position. Adjust "C." See that switch mechanism parts move freely and springs are functioning.

13. Starts eject cycle although set for "Manual" operation. Adjust "D."

14. Noise in loudspeaker while changing needles. Clean "Shorting Contact" and adjust "Q."

15. "Wow" in record reproduction—Instrument should be warmed to about 65° F. Ejector tip should be centered and free to rotate (adjustments "F" and "G"). There should be no solid particles on gear teeth or in grease; no tendency to bind. Turntable plate should be in dynamic balance and "Spindle" should be straight. Proper lubrication is important.

Lubrication. Clean motor gear-box thoroughly before regreasing. Apply less than a tablespoonful of a grease, such as "Cities Service No. 7035-A1" or "Koolmotor Universal Trojan No. 1," directly on gears taking care to get none in rotor bearings. Put medium motor oil (S.A.E. No. 30) in the oil holes. Cover main gear and cam of automatic mechanism with a light grease such as "Socony-Vacuum No. 2." Any good household oil, such as "3-IN-ONE" is suitable for the ejector-tip "F" bearing.

MALLORY TECHNICAL INFORMATION SERVICE

● Throughout its long association with the radio and electronic industry the Mallory organization has consistently given its services or advice on technical problems submitted by those who have seen or heard of our offers to help to the best of our ability. That we have made good on our offer is evidenced by the many letters of appreciation we have in our files for services large or small.

There is no charge or obligation for this service, and many have asked how we can justify the cost of such a service without direct monetary return. Our answer has been essentially as follows:

1. Any help which we render to the field, the serviceman, or the ultimate consumer reflects as a general credit to the industry of which you and we are a part.

2. In many past cases, our work and study on problems submitted has been of real value to ourselves in obtaining a clearer picture of maintenance operations, in finding new applications, or substantially improving product features for existing ones.

In view of the present restrictions on the design and manufacture of electronic parts, we realize that the field will be faced with an increasing number of problems relating to changeover, adaptation, etc., with the limited types available. We reaffirm our desire to help, and offer the benefit of the experience and knowledge of our technical personnel, to all who request it.

Address:

TECHNICAL INFORMATION SERVICE

Wholesale Division

P. R. MALLORY & CO., INC.

3029 E. Washington • Indianapolis

Webster-Chicago—Models 11 and W1270

SERVICE

The changer plays twelve 10-inch or ten 12-inch records. To reload, revolve the two posts slightly, grasping them underneath the shelf plates. Turn them back after the played records are removed; they will fall and lock when they are in the proper position. Place the new records on the shelf plates and push button "R" to put changer in operation. To play the other size records, turn the knob at the top of each post until the proper figure is opposite the pointer. Press the "10" or "12" button, to agree with the pointer setting. To reject a record (or to start a change cycle as for testing purposes) simply press the "R" (release or reject) button, at any time while the needle is upon a record. To play manually, turn plates out of the way as for reloading, and press button "M."

The photos illustrate all the vital parts of the changer. Letters are used alphabetically, to refer to points on the photos; thus, motor oiling holes "AK" are found by glancing down column "A" (left side of Fig. 109) to letters "AK."

Oiling

The changer should be lubricated once a year with about a dozen drops of good light machine oil at each of the following 6 points: (All points can be reached from above, through holes in the mounting plate.) Three oil holes on motor gear housing; reach all three through two holes "AK;" through hole marked "AL," drop the oil upon the flat surface of the cam, it will distribute itself to the proper points; through the hole marked "AM," see felt wick and drop the oil directly upon it; through the hole marked "AN," see felt wick and drop the oil directly upon it.

If squeaks are heard compare the squeak with and without a load of records; any stack of wax records in motion is likely to squeak a little against a pin through their center. See that all five wicks are in position, including three ¼-inch round wicks in frame of motor, one washer-shaped wick on lift "CV," and one on cam lever "CS." See that each wick is thoroughly saturated (as it may not be if insufficient oil or too heavy oil has been used). Lift out all three motor wicks, with tweezers; see if old oil has become gummy (commonly due to use of low-grade oil or low-viscosity oil). If necessary, *clean gummed-up wicks with Kerosene.* See that each is saturated with good oil; then, before replacing them, *drop* a little good oil into the holes. The gearbox of the motor is packed with a semi-fluid grease at the factory, and it should not be necessary to take it apart for lubrication purposes.

Change Cycle

An automatic record player for records of two sizes has three principal duties to perform. These duties are here performed by three mechanisms, interconnected and built together but largely separate in their operation.

(1) The record-changing mechanism—brought into operation originally by the contact of lifter cam "DG" with pawl "DH"—is the simplest of the three. It is driven by the cam groove (not visible) on *under* side (in Fig. 110) of cam gear "DF." As cam lever "CS" is forced, by the pawl, out underneath lift "CV" (which is shown revolved to the right for visibility) the lift rises and forces roller "DJ" into the under groove in cam gear. The motion is transferred to rear changer shaft (at "ED") through cam connecting rod "DE" ("EC"), thence through changer connecting rod "FD" to front changer shaft "BB."

(2) The pickup-operating mechanism—likewise brought into operation originally by the cam-and-pawl action upon cam lever "CS" is driven in part by the groove in *upper* (visible) side of cam gear "DF." As cam lever is forced out, at the beginning of the change cycle, against link "CG," it causes the link to push upward upon pickup plunger "DA," thus lifting needle from record. The same pressure upon link "CG" works, through guide arm "CD," to force stud "DD" down into the groove on the cam gear. This *rotates* the pickup arm, while pickup plunger "DA" *holds it up* off of record. It is rotated first out beyond the turntable until selector plates "BL" have dropped the next record, then rotated back to proper position to start playing.

(3) The mechanism for bringing needle into correct *starting* position must operate accurately for both 10-inch and 12-inch records. Partly due to this requirement, the starting position *is not determined by the cam action.* The upper groove on cam gear is designed so that it, acting alone, would carry the needle *farther* back toward record pin than would ever be desirable as a starting adjustment. Travel of pickup arm toward record pin is then stopped, at proper point for lowering onto the record, by action of lever hub "CL." The stopping takes place as lug "EW" (upon the lever hub) strikes the shoulder on rod "EX." This enables the entire mechanism rotated by cam action on guide arm "CD" to travel on *past* the proper point of rotation for record-starting, while the pickup arm itself, which is held rigid to

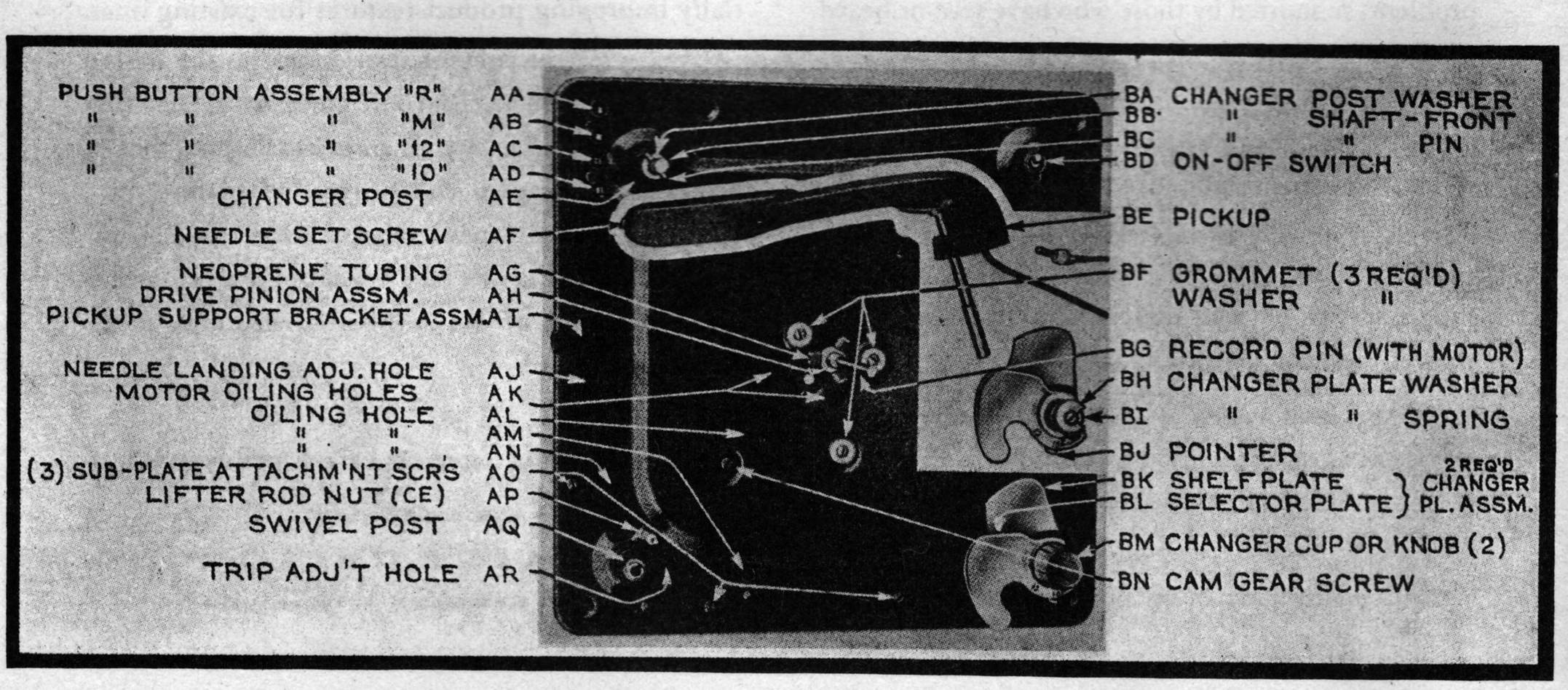

FIG. 109. *The changer should be lubricated once a year through holes in the mounting plate.*

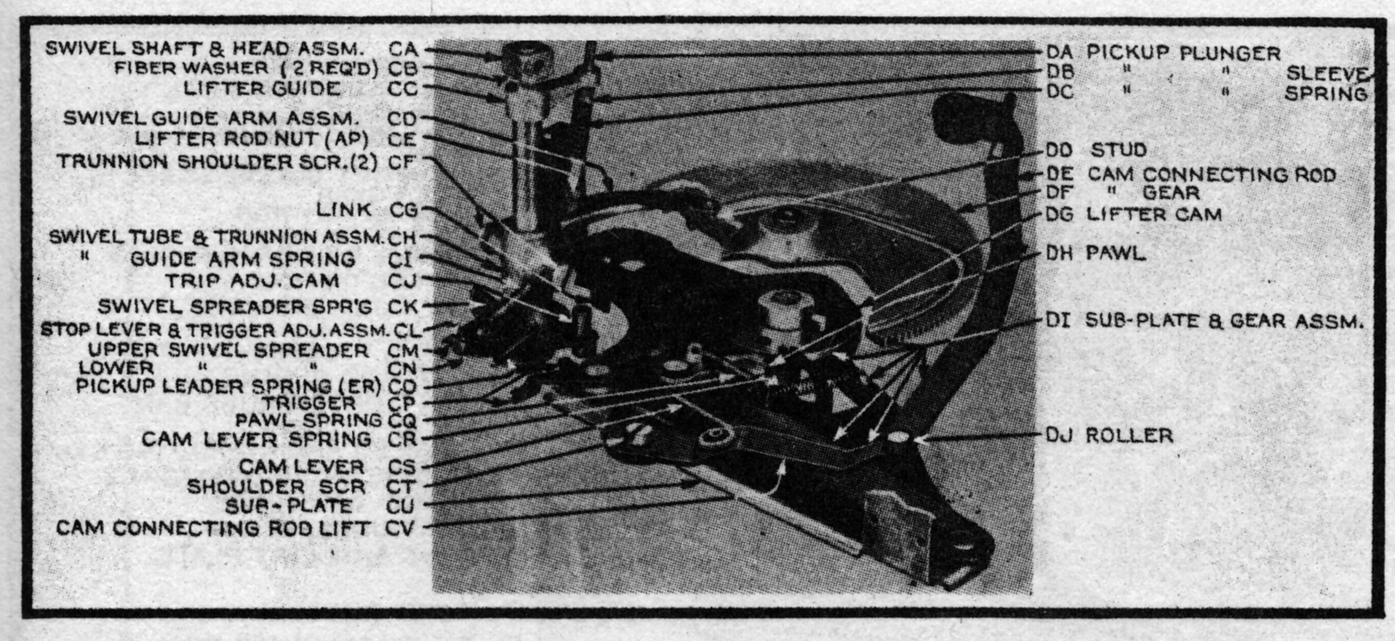

FIG. 110. *The record changing mechanism is brought into operation through the contact of lifter cam DC with pawl DH.*

lever hub "CL," is accurately stopped at proper record-starting point.

Correct adjustment for starting position of needle requires therefore only correct adjustment of rods "EX" and "FK;" the radial difference of 1 inch between correct starting position for 10-inch and 12-inch records is taken care of by exact dimensioning, at the factory, of surfaces at right of rod "FK" which stop against the "10" and "12" key stems. Due to this, when adjusting cam at "FP" is turned (as directed below) the starting position of needle is simultaneously altered for *both* 10-inch and 12-inch records.

Adjustments

There are three adjustments that can be made. Except on certain early changers (see B, below), all three can be made from above: The changer need not be removed from cabinet. Should it become necessary to readjust due to accident or tampering, proceed as follows:

(*A*) *Adjusting landing position of needle on the record.* If needle comes down on the sound track, playing of records will not start at their beginning. Insert screw-driver through hole "AJ." *Turn screw head on needle landing adjusting cam "FP" very slightly counter-clockwise.* If needle comes down too close to outer edge of record or out beyond edge of record turn adjusting cam clockwise.

The factory adjustment of needle landing is ⅛-inch in from outer edge of record.

(*B*) *Adjusting distance from record pin at which trigger will trip and change cycle will begin.* Insert screw-driver through hole "AR." Turn screw head on trip adjusting cam "CJ" *clockwise* for *earlier* tripping. (Effect is to alter position of the cam which strikes trigger "CP." It may be found that cam has been revolved through a half-turn; in this case, above directions would apply only after cam has been returned to correct position by revolving screw head one-half turn.)

On some models of this changer no hole will be found in main plate at "AR." To make the adjustment on these changers, access must be had to the under-side of the mechanism. Instead of cam "CJ," there will be found a trip adjustment screw, so placed that its end strikes the trigger directly. For *earlier* tripping, turn this screw clockwise; for later tripping turn it counter-clockwise.

This changer does not depend, for automatic tripping, on the records being provided with any special grooves at end; it trips whenever needle comes within a certain distance of the record pin. The factory adjustment is for 1¾ inches to 1⅞ inches from *center* of record pin. This is the most generally satisfactory distance; no modern record will then be cut off before playing is finished, and none will fail to trip at end. For certain records of early manufacture it may be impossible to find an adjustment that will always trip and never cut-off, but these may always be played manually.

Adjusting the height to which the pickup arm rises. The arm should rise, during the change cycle, high enough so that it clears the record above it (next to be played) by only ¼ inch. Be careful, before deciding that readjustment is necessary, to see that the record at the bottom of the stack is not a warped one. To make the adjustment, loosen locknut "AP" ("CE") and turn pickup sleeve "DB" to lengthen or shorten pickup plunger "DA." However, if the pickup is made to rise too close to the bottom record, stud "DD" may never clear the groove in the cam gear. In making this adjustment, therefore, care must be taken to see that the pickup arm does not keep moving back and forth continuously (due to stud "DD" remaining in engagement with groove.) When correct adjustment is found, tighten the locknut securely.

Motor Replacement

It may be necessary to adapt the changer to a different power supply. For this purpose, or in case of any serious fault within the motor, remove the entire motor "EA" (with record pin and connecting gear drive) from the changer, and replace it with a suitable new motor.

When mounting the replacement motor, it is important to see that the record pin is centered between the two posts of the changer, that it stands perpendicular to the main plate "EB" and that it has not become bent. When the new motor has been attached, with three screws through grommet sleeves "FF" into its frame, the record pin is seen to revolve without appreciable wobble (a wobble would indicate that it has been bent). The correct position of the pin midway between the posts can be accurately checked. Place a single 12-inch record on the shelf plates "BK," press button "R" and turn turntable forward by hand. Immediately after the shelf plates open and let the record fall, turn the turntable slightly backward, and with the other hand support the record between the shelf plates. It can then readily be seen whether the pin is off center. If it is, remove the record and turntable, and loosen the screw or screws "BF," nearest the shelf plate to which the record appeared closest, slightly. This should improve evenness of operation. However, unless the unevenness was slight, it will be necessary (for a permanent repair) to insert a shim or two on one or more of the three screws (or to change shims from one screw to another). The shims used are shaped like an ordinary washer cut out at one side (see cut-away view at "FE," showing a shim in place upon one of the grommet sleeves). Shims can readily be cut out with shears and punch from thin metal or even cardboard. They should be inserted around proper screws (when the screws have been sufficiently loosened) between the motor frame and the metal grommet sleeves. Do not insert shims next to rubber grommet.

Before tightening screws, drop drive pinion assembly "AH" into mesh with idler gear (but not down far enough to seat upon drive pin). Then make sure that when the three screws are tightened, drive pinion and idler still work freely together and do not bind. If necessary, loosen screws again, and shift them until proper tooth clearance is obtained. Then tighten screws, and test, as above directed, the centering of record pin between changer posts.

See that motor frame is well grounded by wire soldered to lugs, as shown on bottom view photo.

Trouble Shooting

(1) *Mechanism is slow in starting, or stalls during a change cycle, but a slight forward push with the hand starts it again.* May be caused by:

(a) Failure to lubricate properly. *Oil thoroughly*, per instructions above.

(b) Loose setscrews.

(c) Weakness of drive; line voltage may be abnormally low, or motor windings damaged. If windings are found damaged, remove motor and return it to factory for repair or replacement.

(2) *Motor fails to run, even when it is entirely disconnected from other wiring and proper voltage is applied directly to the two ends of its windings.* This indicates trouble in motor windings. Unless the damage is easily seen and repaired, replace motor, as above described.

(3) *Motor is slow in starting.*

(a) *Check oiling*, as directed above. It may

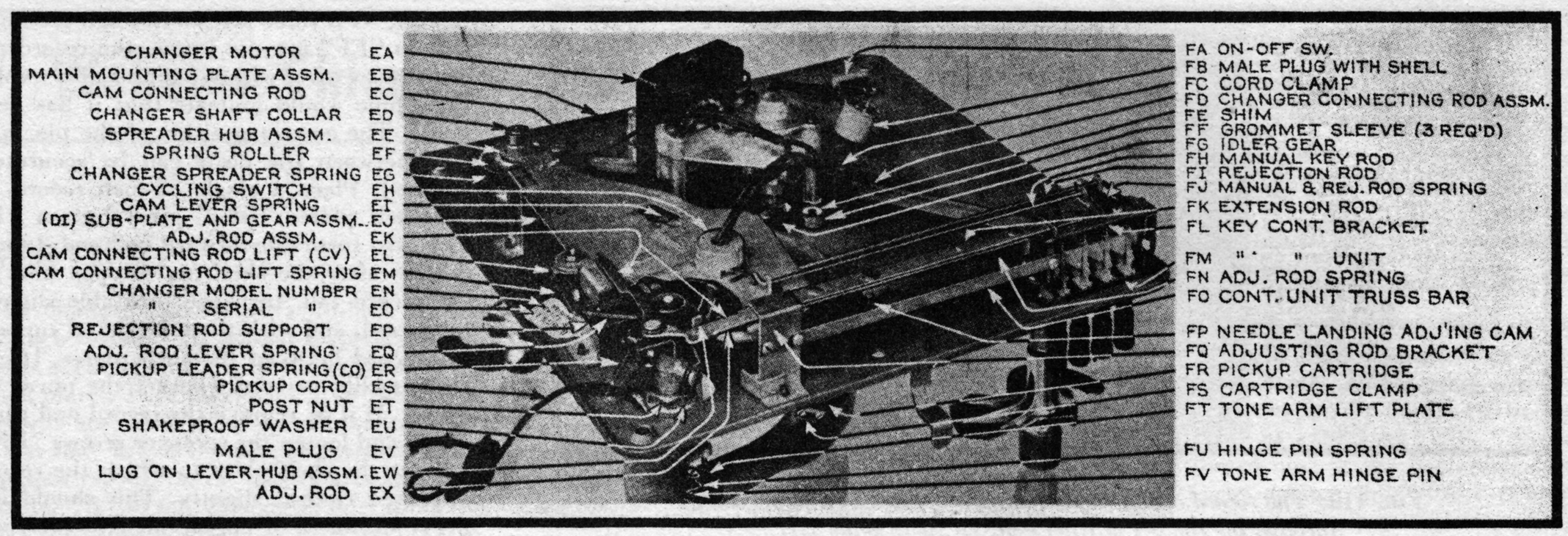

FIG. 111. *The correct adjustment for the starting position of the pickup arm requires only the correct adjustment of rods EX and FK.*

not have been properly done; old oil may have become gummy.

(b) Changer may have been in a very cold place, and may not yet have reached room temperature. Give it a fair chance to get warmed up before concluding that motor is defective.

(4) *Squeaks or other noises, during playing of records.*

(a) *Check oiling.*

(b) See that all setscrews are tight.

(5) *Motion of pickup toward record pin will not trip changer mechanism.*

(a) (Only on models not having trip adjustment hole "AR.") It may be found that, instead of trigger being actuated, there is stretching of swivel spring "CK," allowing the spreaders to open. *Increase tension of the spring,* by bending the lug on either spreader slightly. If this increased tension causes needle to jump across the record, needle may be a little out of vertical, radially—it may lean toward center of record. To remedy this, grasp pickup arm and twist it, very slightly, in a clockwise direction (looking from needle end) so that it stands vertical, or even leans a little in outward direction.

(b) If trigger is being properly actuated, probably cam lever "CS" is binding against subplate "CU." Look for dirt or obstructions; see that pawl "DH" and trigger "CP" are working freely on their rivets. If the lever engages the pawl so that lift "CV" forces roller "DJ" up into the under groove on cam gear, and if setscrews are tight, the change cycle must operate, as cam gear turns.

(6) *Pressing button "R" doesn't trip changer mechanism.*

(a) Check key control unit "FM": see whether there is an obstruction or a bent part which prevents operation of button "R" clear down to the end of its travel.

(b) Examine reject rod "FI." If it does not trip, even when properly revolved by complete depressing of button "R," the rod has probably been bent, and must be restored in same way. *Grasp the two ends and twist it* slightly.

(c) If trigger "CP" is being properly actuated but without starting a change cycle, see directions above.

(7) *Pressing button "M" fails to put changer mechanism out of action so as to enable manual operation.* First see that button goes clear down; then follow its action through manual rod "FH."

(8) *Motor stops immediately when changer switch is turned off during a change cycle* (instead of continuing to run, as it should, until needle is again upon a record, and then stopping). Or—

(9) *Turning on-off switch fails to stop changer at all.* Either of these two conditions would indicate failure of cycling switch "EH." Cycling switch operates normally to short-circuit the manual on-off switch (which may be located in position shown at "FA" or elsewhere) during change cycle only. Such damage to cycling switch (not likely to occur) would necessitate returning either the subplate assembly or the entire changer to factory.

(10) *Needle lands properly on record but fails to move over into record groove.* Pickup arm is normally impelled toward center of records by lead spring "ER." Should a slight increase in its tension be found necessary, this can be easily obtained by bending the lug, to which it is attached, down against main plate. If tendency then appears for needle to jump across record, check angle of needle.

(11) *Records fall unevenly upon turntable.* Seldom objectionable (some unevenness may even be advantageous); this is due to record pin not being correctly centered between changer posts. If necessary, it can be corrected as described above.

(12) *Last record drops on one side only.* This suggests a changer post bent out of perpendicular to main plate. *Test as directed above.* If post must be straightened, be careful not to bend other parts.

(13) *Changer continues cycling.* Probably due to failure of lift "CV" to be drawn back out of engagement with cam gear. Check the various rivets at which motion occurs, to find the point where friction or binding is interfering with freedom of motion.

(14) *Record is driven, but not heard, or not heard with proper volume.* See that pickup cord is plugged in. Check amplifier and speaker and connections to them, thoroughly. If then trouble is still suspected in pickup, test its output with a *vacuum-tube voltmeter.* Playing an average record, output should test 1 to 2.5 volts if pickup cartridge is of crystal type, or 0.5 volt if of magnetic type. If pickup cartridge is found not to deliver proper output, remove it and install another.

(15) *Selector plate fails to separate bottom record from stack.* This is due either to a badly warped condition of the record, or to its being of a thickness very considerably different from those now in standard use. The design of both selector and shelf plates is such as to accommodate a maximum variation in thickness and flatness of records, but certain records may be found which are so far out as to be impracticable for use in automatic changers.

If Necessary to Disassemble the Changer

First detach the entire changer mechanism (except changer connecting rod assembly "FD" and cam connecting rod assembly "DE," also seen at "EC") from main plate "EB." To do this, first take out shoulder screw "CT," to free the rest of the mechanism from assembly "DE." Then remove the three screws "AO," which hold subplate assembly "DI" to main plate "EB." Also remove screw "BN," which holds cam gear "DF." Pull off the four key control buttons. Remove the two screws that hold key control and "FM" to main plate. Now remove control unit truss bar "FO," rejection rod support "EP," and extension rod bracket "FQ"—this means taking out five screws. Remove flat spring "FJ," by taking out one screw. Rods "FH" and "FI" can then, with due care, be extracted without bending. Free the cam connecting rod assembly "DE," by loosening setscrew holding spreader hub "EE" to rear changer shaft. In reassembling, reverse the procedure, taking care to get all springs properly connected as shown in the photos, without stretching any of them.

• *Section* 6

THE MYE TECHNICAL MANUAL

Automatic Tuning

P.R. MALLORY & CO. Inc
MALLORY

AUTOMATIC TUNING

The past four years have witnessed the widespread adoption of automatic tuning systems by practically every radio receiver manufacturer. The appeal of this feature to the public has been fostered by intensive sales promotion and advertising campaigns which have established it as a necessary adjunct to a modern receiver. It presents to the radio service engineer a unique opportunity for the establishment of closer customer contact since the original setup of selected stations as well as the maintenance of continued satisfactory automatic operation is a function which he alone is technically capable of rendering.

As everyone acquainted with radio receiver details will realize, automatic station selection is not a new development but rather a refinement and perfection of principles which have been in use for several years past. It is interesting to note that the continued progress towards the ideal of simplification of the tuning requirements of radio receivers has been the result of a series of cycles in which improvements in mechanical design have in every case followed and been initiated by the introduction of new radio circuits. In the present case the development of automatic frequency control of superheterodyne oscillators, stabilization of drifts due to temperature and humidity and the expansion of IF amplifier circuits have simplified the design of automatic tuning devices by allowing considerable latitude in the mechanical and electrical precision of selectors.

The present article is a combination of the texts appearing in the 2nd Edition Radio Service Encyclopedia (pages 249-274), and the Automatic Tuning Supplement Number 8 to the 3rd Edition Radio Service Encyclopedia. In each of these articles a system of listing all models in table form with reference to specific portions of the text applying to the particular model was used, and the present article continues this method. The present article has a greater utility not only because of integrated form but also because it combines the basic theory of operation as covered in the 2nd Edition with the specific set-up and service information appearing in the Supplement.

In setting up this reference system it has been necessary to classify the material under nine headings as follows:

Section 1	Mechanically Operated Manual Types
Section 2	Tuned Circuit Substitution Types
Section 3	Motor Operated Types
Section 4	Electric Tuning Motors
Section 5	Station Selector Switches
Section 6	Transfer Devices
Section 7	Silencing Equipment and Operation
Section 8	Station Selector Commutator Devices
Section 9	Special Mechanisms

Some of the sections have subdivisions to cover the many variations of a basic operation and references in the table are made directly to the subdivision in such cases. Two subdivision references are frequently given, one for theory of operation, and the second for specific set-up data.

The column headed "Type" in the reference table actually names variations of the three main types, that is, manually operated, circuit substitution, or motor operated. For instance, it is more informative to refer to a particular system as dual mica, or mica and permeability type rather than to the general classification of tuned circuit substitution.

The column headed, "Number of Buttons," refers to the number of selectors actually used for station reception. Transfer buttons, tone control buttons, etc., are not included in the number shown.

The "Special Descriptions" column refers to portions of the text devoted to transfer devices, audio silencing systems, etc., applicable to models carrying the reference. Altogether there are seven subheadings under the Special Description classification as follows: Button Indexing Adjustment, Tuning Motor, Push-Button Station Selector Switch, Transfer Device-Manual to Automatic, Audio Silencing Circuit and AFC Release During Tune, Station Selecting Commutator Device, and Stop or Lock-In Mechanism.

It should be noted that the method of referring receivers of one manufacturer to those of another manufacturer for illustrative purposes does not indicate that the receivers are identical or even similar; only that the automatic tuning device operation is basically the same.

MANUFACTURER AND MODEL	Type	No. of Buttons	REFERENCE Section	REFERENCE Sub-Division	SPECIAL DESCRIPTION Button Indexing Adj.	Tuning Motor	Push-Button Station Selector Switch	Transfer Device Manual to Automatic	Audio Silencing Circuit and AFC Release During Tune	Station Selecting Commutator Device	Stop or Lock-In Mechanism
AIR KING											
910, 911	Dual Mica	5	2	2A, 2B			5B	6D			
ALLIED											
A9757, A9758	Telephone Dial	12	1	1E	1C4			6B	7D, 7K2		
B10525, B10526	Motor Operated	8	3			4B	5B	6D	7H, 7K4	8C	
B10537, B10538, B10539	Motor Operated	8	3	3B		4B	5B	6D	7H, 7K4	8C	
B10540, B10541, B10542	Telephone Dial	10	1	1C	1C2				7A		1C12
B10580, B10581, B10582	Telephone Dial	12	1	1E	1C4			6B	7D, 7K2		
B10799	Rocker Bar	6	1	1B, 1B1							
E10704	Cam and Lever	4	1	1A, 1A1							
E10705, E10706	Rocker Bar	6	1	1B, 1B1							
E10707, E10708	Rocker Bar	6	1	1B, 1B1							
E10709, E10710	Dual Permeability	7	2	2B							
E10711, E10712	Dual Permeability	7	2	2B							
E10718, E10720	Rocker Bar	6	1	1B, 1B1							
E10721, E10722, E10723	Rocker Bar	6	1	1B, 1B1							
E10726	Dual Permeability	7	2	2B							
E10727	Rocker Bar	6	1	1B, 1B1							
E10728	Dual Permeability	7	2	2B							
E10740	Rocker Arm	4	1	1B, 1B1							
E10741, E10742, E10743	Dual Permeability	6	2	2B							
E10744, E10745	Motor Operated	8	3	3B		4B	5B	6D	7H, 7K4	8C	
E10751	Cam and Lever	5	1	1A2							
E10773, E10774	Dual Permeability	5	2	2B							
E10786, E10788	Rocker Bar	4	1	1B							
E10790, E10794	Rocker Bar	4	1	1B							
E10795	Rocker Bar	5	1	1B							
E10797, E10798, E10799	Dual Permeability	9	2	2B							
E10800	Cam and Lever	4	1	1A1							
E10806	Rocker Bar	6	1	1B1							
E10807, E10808, E10809	Dual Permeability	7	2	2B							
E10810, E10811, E10812	Rocker Bar	6	1	1B1							
E10813, E10814, E10815	Dual Permeability	7	2	2B							
E10825, E10826, E10827	Rocker Bar	6	1	1B1							
E10828, E10829, E10830	Rocker Bar	6	1	1B1							
E10840, E10841, E10842	Cam and Lever	4	1	1A1							
E10850, E10851	Motor Operated	8	3	3B		4B	5B	6D	7H, 7K4	8C	
E10870, E10872, E10874	Dual Permeability	6	2	2B							
E10875, E10876, E10877	Dual Permeability	6	2	2B							
E10880, E10881	Motor Operated	8	3	3B		4B	5B	6D	7H, 7K4	8C	
E10882A to E10887A	Rocker Bar	4	1	1B							
E10890	Cam and Lever	5	1	1A2							
E10893, E10894, E10895	Rocker Bar	4	1	1B1							
E10897, E10898, E10899	Rocker Bar	6	1	1B1							
E10900, E10901, E10902, E10903	Dual Permeability	9	2	2B							
E10905	Dual Permeability	4	2	2B							
E10906, E10907	Rocker Bar	6	1	1B							
E10920	Rocker Bar	4	1	1B							
AUTOMATIC											
855, 892	Permeability & Mica.	6	2	2B			5B	6B			
BELMONT											
408A	Cam and Lever	5	1	1A1							
418A	Cam and Lever	6	1	1A1							
501A	Cam and Lever	5	1	1A1							
511A	Cam and Lever	6	1	1A3							
517A, 519A, 520A, 521A	Cam and Lever	6	2	2B							
524A	Cam and Lever	6	1	1A3							
526, 527, 529, 531B	Cam and Lever	5	1	1A1							
553A	Cam and Lever	6	1	1A1							
577A, 577C, 579	Cam and Lever	5	1	1A4							
582, 583A, 611A, 612A	Cam and Lever	6	1	1A1							
632A, 633A, 634A, 635A, 636	Cam and Lever	5	1	1A1							
637A, 638	Cam and Lever	6	1	1A1							
665A	Cam and Lever	6	1	1A3							
676A	Cam and Lever	6	1	1A5							
677	Cam and Lever	6	1	1A4							
678	Cam and Lever	6	1	1A5							
751A	Cam and Lever	6	1	1A6							
761A, 765A	Cam and Lever	6	1	1A3							
767A	Cam and Lever	6	1	1A6							
791A	Cam and Lever	6	1	1A3							
792, 793	Cam and Lever	6	1	1A7							
794	Cam and Lever	6	1	1A8							
796, 797	Cam and Lever	6	1	1A3							
860	Cam and Lever	8	1	1A3					7B		
860A	Cam and Lever	8	1	1A3					7B		
867A	Cam and Lever	6	1	1A6							
1075A, 1075B	Dual Permeability	6	2	2B							
1175	Cam and Lever	8	1	1A3					7B		
1175A	Cam and Lever	8	1	1A3					7B		
BUICK											
980598, 980620	Rack and Pinion	5	9	9D							
CADILLAC											
1433970	Permeability Tuners.	5	2	2B							
CHEVROLET											
985283	Motor Operated	8	8	8D							
985425, 985426	Rocker Bar	5	1	1B2							
CLARION											
55A, 57A, 58B	Dual Mica	5	2	2A							
70X	Dual Mica	4	2	2A							
93, 1105	Dual Mica	5	2	2A							

MANUFACTURER AND MODEL	Type	No. of Buttons	REFERENCE Section	REFERENCE Sub-Division	SPECIAL DESCRIPTION Button Indexing Adj.	Tuning Motor	Push-Button Station Selector Switch	Transfer Device Manual to Automatic	Audio Silencing Circuit and AFC Release During Tune	Station Selecting Commutator Device	Stop or Lock-In Mechanism
COLONIAL (Sears-Roebuck)											
4610, 4666, 4686	Telephone Dial	11	1	1C	1C1				7A		1C8
4687	Telephone Dial	11	1	1C	1C1			6A	7A, 7K1		1C8
4786	Telephone Dial	11	1	1C	1C1				7A		1C8
4787	Telephone Dial	11	1	1C	1C1			6A	7A, 7K1		1C8
4791, 4792	Telephone Dial	11	1	1C	1C1				7A		1C8
CONTINENTAL											
5A	Cam and Lever	4	1	1A1							
5B	Rocker Bar	4	1	1B1							
6B, 6C	Motor Operated	6	3	3B		4B	5B	6D	7H, 7K4	8C	
6G	Dual Permeability	6	2	2B							
6K	Rocker Arm	4	1	1B1							
7G, 8A, 8AU	Dual Permeability	6	2	2B							
9G, 11A, 11S, 16R, 16S	Motor Operated	8	3	3B		4B	5B	6D	7H, 7K4	8C	
55	Cam and Lever	5	1	1A2							
CROSLEY											
A158, A168, A169, A258	Rocker Bar	5	1	1B3							
A268, A358	Rocker Bar	5	1	1B3							
418, 428	Rocker Bar	4	1	1B3							
438M, 448	Rocker Bar	5	1	1B3							
458	Rocker Bar	4	1	1B3							
548	Rocker Bar	5	1	1B3							
588, 598	Rocker Bar	4	1	1B3							
617	Motor Operated		3	3A		4C	5D				
628, 638	Rocker Bar	5	1	1B3							
648	Rocker Bar	4	1	1B2							
718, 758, 818	Rocker Bar	5	1	1B3							
828	Rocker Bar	8	1	1B3							
1018	Rocker Bar	5	1	1B3							
1118	Motor Operated	8	3	3B		4C	5A		7G	8D	
1127	Motor Operated		3	3A		4C	5D				
1137, 1227, 1237	Motor Operated	8	3	3B		4C	5A		7G	8D	
5628	Rocker Bar	5	1	1B3							
DELCO											
R667, R669	Delco-Matic	6	9	9B							
R675, R677, R678	Rocker Bar	5	1	1B4							
R1132	Delco-Matic	8	9	9B							
R1134, R1135, R1139	Cam and Lever	5	1	1A1							
R1140	Dual Permeability	5	2	2B							
R1141, R1142, R1143, R1144	Dual Permeability	6	2	2B							
DETROLA											
175, 183, 185	Motor Operated	8	3	3B		4B	5A		7G	8C	
191, 192, 193, 195(C4), 204	Motor Operated	10	3	3B		4B	5A		7G	8C	
209, 210	Dual Permeability	6	2	2B							
220, 221, 222	Rocker Bar	4	1	1B1							
223, 225	Rocker Bar	6	1	1B1							
226, 227	Rocker Bar	4	1	1B1							
228	Rocker Bar	6	1	1B1							
231	Motor Operated	8	3	3B		4B	5A		7G	8C	
233	Rocker Bar	6	1	1B1							
258, 259, 270	Dual Mica	6	2	2A							
ERLA											
11 Tube 3 Band	Flash Tuning	12	1	1E	1C4			6B	7D, 7K2		
11 Tube 3 Band	Telephone Dial	10	1	1C	1C3			6B	7D, 7K2		
76A	Flash Tuning	12	1	1E	1C4			6B	7D, 7K2		
78B, 78BE, 82A, 82AE, 86AE	Telephone Dial	10	1	1C	1C3			6B	7D, 7K2		
91B, 95B	Telephone Dial	10	1	1C	1C3			6B	7D, 7K2		
EMERSON											
AR171, AR173, AR174	Automatic Dial	10	1	1C	1C1						1C11
AR176, AR180, AR185	Automatic Dial	10	1	1C	1C1						1C11
AT170, AT172, AT181	Automatic Dial	10	1	1C	1C1						1C11
AV193, AY194, AY195	Single Adjust. Mica	6	2	2C							
AZ196	Single Adjust. Mica	6	2	2C							
BB208, BB209	Rocker Bar	4	1	1B1							
BD197, BD198	Single Adjust. Mica	6	2	2C							
BQ223, BQ225, BQ228	Instamatic	6	9	9E							
BR224, BR226, BU229	Instamatic	6	9	9E							
BU230, BW231	Instamatic	6	9	9E							
CA208, CA209, CA234	Rocker Bar	4	1	1B1							
FADA											
A66PC, A66T, A76PC	Dual Mica	6	2	2A							
A76T, 6A39	Dual Mica	6	2	2A							
358, 366, 366PT, 368	Flashomatic	6	2								
FAIRBANKS-MORSE											
9AC4, 9AC5		15	1	1C	1C1				7A, 7K1		1C8
12AC6		15	1	1C					7A		
FIRESTONE											
S7407-5	Ratchet Switch	6	2	2D							
1175	Cam and Lever	8	1	1A3							
01009, 01010	Cam and Lever	5	1	1A1							
01029	Cam and Lever	8	1	1A3							
01030	Cam and Lever	6	1	1A1							
015040, 015050, 015060	Rocker Bar	4	1	1B1							
015070	Cam and Lever		1	1A3, 1A8							
015080, 015090	Cam and Lever		1	1A9							
015100, 015110, 015120	Rocker Bar	4	1	1B1							
015130	Rocker Bar	4	1	1B1							
100502	Cam and Lever	6	1	1A4							
FORD											
F1740, 6MF490	Ratchet Switch	5	2	2D							

MANUFACTURER AND MODEL	Type	No. of Buttons	REFERENCE Section	REFERENCE Sub-Division	SPECIAL DESCRIPTION Button Indexing Adj.	Tuning Motor	Push-Button Station Selector Switch	Transfer Device Manual to Automatic	Audio Silencing Circuit and AFC Release During Tune	Station Selecting Commutator Device	Stop or Lock-In Mechanism
GALVIN											
1938 Auto Models	Spot Tuning	Any No.	1	1D	1C6						
8-60, 8-80	Motor Operated	6	3	3B		4B	5A		7E		1C15
10Y1, 12Y, 12Y1	Motor Operated	19	3	3C	1C2	4C	5C	6C	7G, 7K2		1C13
9-49, 9-69, 15F	Motor Operated	6	9	9G							
16C	Rocker Bar	5	1	1B							
17D, 17DA, 18O, 19B	Rocker Bar	6	1	1B							
20P, 21L, 22S, 24K, 25N	Motor Operated	6	9	9G							
89K1, 89K2, 89K3, 109K1	Motor Operated	6	9	9G							
109K2	Motor Operated	6	9	9G							
GAMBLE-SKOGMO											
A1, A2, A3, A6	Motor Operated	8	9	9C							
527A, 527C	Cam and Lever	5	1	1A1							
C640	Cam and Lever	6	1	1A1							
645	Dual Mica	5	2	2A			5B	6D			
648	Rocker Bar	6	1	1B1							
677	Cam and Lever	6	1	1A4							
678	Cam and Lever	6	1	1A5							
735	Dual Mica	5	2	2A							
761A, 796, 797	Cam and Lever	6	1	1A3							
867A	Cam and Lever	6	1	1A6							
GAROD											
782, 782-1	Prestomatic	6	2	2A			5B	6B			
GENERAL ELECTRIC											
F96	Touch Tuning	6	2	2A			5B	6D			
F107, F109, F137	Motor Operated	13	9	9A		4A	5B	6D	7E, 7K3	8B	
G50	Telephone Dial	8	1	1B2							
G53	Dual Mica	6	2	2A				6B			
G55	Telephone Dial	8	1	1B2							
G56, G61, G64, G66, G68	Dual Mica	6	2	2A				6B			
G69, G75, G76, G78	Dual Mica	6	2	2A				6B			
G85	Dual Mica	8	2	2A				6B			
G86	Dual Mica	6	2	2A				6B			
G95	Motor Operated	13	3	3B							
G97	Dual Mica	6	2	2A				6B			
G99	Dual Mica	8	2	2A				6B			
G105, G106	Motor Operated	13	3	3B							
G655	Dual Mica	6	2	2A				6B			
GA62	Rocker Bar	5	1	1B1							
GD51	Cam and Lever	5	1	1A1							
GD52, GD52A, GD60, GD63	Dual Mica	5	2	2A			5B	6D			
GD610	Cam and Lever	5	1	1A1							
H73, H77, H78, H79, H87	Permeability & Mica.	6	2	2A, 2B							
H116, H118	Permeability & Mica.	8	2	2A, 2B							
H634, H638, H640	Permeability & Mica.	5	2	2A, 2B							
HJ905, HJ908	Permeability & Mica.	5	2	2A, 2B							
HJ1005	Permeability & Mica.	6	2	2A, 2B							
HJ1205	Permeability & Mica.	8	2	2A, 2B							
GENERAL HOUSEHOLD UTILITIES (Grunow)											
585	Teledial	10	1	1C	1C3				7A, 7K1		1C8
588	Teledial	8	1	1C	1C3				7A, 7K1		1C8
589	Teledial	10	1	1C	1C3				7A, 7K1		1C8
622	Teledial	8	1	1C	1C3				7A, 7K1		1C8
623	Teledial	10	1	1C	1C3				7A, 7K1		1C8
624, 632	Teledial	8	1	1C	1C3				7A, 7K1		1C8
633, 1067	Teledial	10	1	1C	1C3				7A, 7K1		1C8
1081, 1091, 1181, 1183, 1185	Teledial	16	1	1C	1C1				7A, 7K1		1C8
1291, 1293	Teledial	15	1	1C	1C1				7A, 7K1		1C8
GILFILLAN											
5T8	Dual Mica	6	2	2A			5B	6D			
13C8-E	Motor Operated	8	3	3B		4B	5B	6A	7H	8C	
HERBERT H. HORN											
11A	Motor Operated	8	3	3B		4B	5B	6D	7H, 7K4	8C	
HOWARD											
210 Adapter, 211 Converter	Dual Mica	8	2	2A			5B	6D			
240, 240-2	Dual Mica	8	2	2A			5B				
318, 318D, 325D, 368A	Dual Mica	8	2	2A			5B	6D			
375	Permeability & Mica.	6	2	2A, 2B							
400A, 425A	Motor Operated	8	3	3B		4B	5B	6D	7H		8C
418, 468, 525	Permeability & Mica.	6	2	2A, 2B							
HUDSON											
SA40	Solenoid	6	9	9F							
MAGNAVOX											
CR101M, CR108M	Motor Operated	8	3	3B							
CR121	Dual Mica	6	2	2A				6B			
CR122	Motor Operated	8	3	3B							
CR123	Rocker Bar	6	1	1B							
CR124	Dual Mica	6	2	2A				6B			
CR128	Rocker Bar	6	1	1B							
MAJESTIC											
62A	Rocker Bar	4	1	1B1							
639, 639B	Rocker Bar	6	1	1B1							
651-EB	Dual Mica	4	2	2A				6B			
739	Rocker Bar	4	1	1B1							
1056X, 1058X	Dual Permeability	5	2	2B							
1356X, 1656X	Dual Permeability	7	2	2B							
11056	Motor Operated	6	3	3B							
11058	Motor Operated	8	3	3B							
11356	Motor Operated	10	3	3B							
11656	Motor Operated	12	3	3B							

MANUFACTURER AND MODEL	Type	No. of Buttons	REFERENCE Section	REFERENCE Sub-Division	SPECIAL DESCRIPTION Button Indexing Adj.	Tuning Motor	Push-Button Station Selector Switch	Transfer Device Manual to Automatic	Audio Silencing Circuit and AFC Release During Tune	Station Selecting Commutator Device	Stop or Lock-In Mechanism
MIDWEST											
VT16, VT18, VT20	Motor Operated	18	3	3B		4B	5A	6F	7C	8C	
MONTGOMERY-WARD											
62-274, 62-280, 62-282	Cam and Lever	6	1	1A1							
62-284, 62-288, 62-290	Cam and Lever	6	1	1A1							
62-303, 62-321	Motor Operated	8	9	9C							
62-322	Dual Permeability	6	2	2B							
62-323, 62-324	Cam and Lever	6	1	1A3							
62-350	Cam and Lever	4	1	1A1							
62-361	Cam and Lever	6	1	1A1							
62-362	Cam and Lever	6	1	1A3							
62-363, 62-370, 62-390	Dual Permeability	6	2	2B							
62-401, 62-403, 62-422	Dual Permeability	6	2	2B							
62-433	Motor Operated	8	9	9C							
62-434, 62-435	Cam and Lever	6	1	1A3							
62-451	Motor Operated	8	9	9C							
62-453	Cam and Lever	6	1	1A1							
62-459	Cam and Lever	5	1	1A1							
62-463, 62-470, 62-479	Dual Permeability	6	2	2B							
62-490	Dual Permeability	6	2	2B							
62-501, 62-502, 62-504A	Cam and Lever	6	1	1A1							
62-505A, 62-552, 62-553	Cam and Lever	6	1	1A1							
62-554	Cam and Lever	5	1	1A10							
62-558	Cam and Lever	6	1	1A3							
62-601	Cam and Lever	6	1	1A1							
62-650	Dual Permeability	6	2	2B							
62-651, 62-652	Cam and Lever	6	1	1A6							
62-653	Cam and Lever	5	1	1A10							
62-654, 62-655, 62-656	Cam and Lever	6	1	1A6							
62-700	Dual Permeability	6	2	2B							
62-713	Cam and Lever	6	1	1A11							
62-750, 62-751	Cam and Lever	6	1	1A6							
62-900, 62-1100	Dual Permeability	6	2	2B							
62-1558	Cam and Lever	6	1	1A3							
04BR-609A	Cam and Lever	6	1	1A1							
04BR678C	Cam and Lever	6	1	1A5							
93BR462A	Cam and Lever	6	1	1A3							
93BR508, 93BR509	Cam and Lever	4	1	1A1							
93BR560A	Cam and Lever	6	1	1A11							
93BR561A, 93BR563A	Cam and Lever	6	1	1A14							
93BR564A	Cam and Lever	6	1	1A1							
93BR657A	Cam and Lever	6	1	1A11							
93BR658A, 93BR659A	Cam and Lever	6	1	1A14							
93BR660A	Cam and Lever	6	1	1A14							
93BR713A	Cam and Lever	6	1	1A11							
93BR714A, 93BR714B	Cam and Lever	6	1	1A14							
93BR715A, 93BR717A	Cam and Lever	6	1	1A14							
93BR1201A	Cam and Lever	6	1	1A14							
NOBLITT-SPARKS											
6, 68	Dual Mica	6	2	2A							
92	Dual Mica	6	2	2A				6B			
818AT, 828AT, 838AT	Phantom Tuning	10	1	1E	1C4			6A	7E		
1237, 1247, 1247A	Phantom Tuning	6	2	2A			5B	6B			
1427	Phantom Tuning	10	2	2A			5B	6B			
OLDSMOBILE											
982126, 982127	Rocker Bar	6	1	1B2							
PACKARD BELL											
160	Motor Operated	8	3	3B		4B	5B	6E	7H	8C	
PACIFIC (Chicago)											
Converter Unit	Selectro-Matic	6	2	2A			5B	6D			
PACIFIC (Los Angeles)											
37, 37A	Dual Mica	6	2	2A			5B	6D			
PACIFIC											
8AC	Rocker Bar	6	1	1B							
501, 601, 602	Rocker Bar	4	1	1B							
PACKARD											
PA333915	Motor Operated	5	9	9J							
PA351099, PA351100	Ratchet Switch	5	2	2D							
PA351101, PA351102	Ratchet Switch	5	2	2D							
PHILCO											
37-9, 37-10, 37-11, 37-116	Automatic Dial		1	1C	1C1			6A	7A, 7K1		1C8
37-675, 37-690	Automatic Dial		1	1C	1C1			6A	7A, 7K1		1C8
38-1(121), 38-2(121), 38-3(121)	Automatic Dial		1	1C	1C1			6A	7A, 7K1		1C8
38-4(121), 38-7(121), 38-7(124)	Cone-Centric		1	1C	1C3				7A		1C11
38-22	Cone-Centric		1	1C	1C3				7A		1C11
38-116(121), 38-116(125)	Automatic Dial		1	1C	1C1			6A	7A, 7K1		1C8
38-690	Automatic Dial		1	1C	1C1			6A	7A, 7K1		1C8
39-17, 39-18, 39-19	Cam and Lever	6	1	1A1							
39-25, 39-30, 39-35	Permeability & Mica.	8	2	2B							
39-36, 39-40, 39-45	Permeability & Mica.	8	2	2B							
39-70, 39-75	Cam and Lever	6	1	1A1							
39-85	Permeability & Mica.	6	2	2B							
39-117, 39-118, 39-119	Dual Mica	5	2	2A							
40-125, 40-135	Dual Mica	5	2	2A							
40-150, 40-155	Permeability & Mica.	7	2	2B							
40-160, 40-165	Permeability & Mica.	5	2	2B							
40-180, 40-185, 40-190	Permeability & Mica.	7	2	2B							
40-195, 40-200	Permeability & Mica.	8	2	2B							
105	Dual Mica	5	2	2A							
108	Permeability & Mica.	8	2	2B							

MANUFACTURER AND MODEL	Type	No. of Buttons	REFERENCE Section	REFERENCE Sub-Division	SPECIAL DESCRIPTION Button Indexing Adj.	Tuning Motor	Push-Button Station Selector Switch	Transfer Device Manual to Automatic	Audio Silencing Circuit and AFC Release During Tune	Station Selecting Commutator Device	Stop or Lock-In Mechanism
PONTIAC											
983679, 983680	Rocker Bar	5	1	1B1							
R. C. A.											
HF1	Permeability & Mica.	8	2	2B							
HF2, HF4, HF6, HF8	Motor Operated	8	3	3B							
9M1, 9M2	Rocker Bar	5	1	1B2							
U10, U12, U20	Rocker Bar	6	1	1B2							
U25, U26	Permeability & Mica.	6	2	2B							
U30	Motor Operated	8	2	2B							
U44	Rocker Bar	6	1	1B5							
K50	Rocker Bar	6	1	1B2							
M50	Rocker Bar	5	1	1B1							
T55	Rocker Bar	6	1	1B2							
K60	Rocker Bar	8	1	1B5							
M60	Rocker Bar	5	1	1B1							
T60, T62	Rocker Bar	6	1	1B2							
T64	Rocker Bar	6	1	1B5							
M70	Rocker Bar	5	1	1B1							
K80, K81	Rocker Bar	8	1	1B5							
T80	Rocker Bar	6	1	1B5							
86T6	Permeability & Mica.	6	2	2B							
87K1, 87T2	Permeability & Mica.	6	2	2B			5B	6B			
94X1, 94X2	Dual Mica	6	2	2A							
95T5	Permeability & Mica.	5	2	2B							
95X1	Dual Mica	5	2	2A							
96BK6, 96BT6	Dual Permeability	4	2	2B							
96E	Permeability & Mica.	5	2	2B							
96E2, 96K, 96K2	Permeability & Mica.	6	2	2B							
96T2	Permeability & Mica.	6	2	2B							
96T4, 96T5	Permeability & Mica.	5	2	2B							
96X11, 96X12, 96X13, 96X14	Rocker Bar	5	1	1B2							
97E, 97K, 97KG, 97T	Permeability & Mica.	6	2	2B							
97X	Permeability & Mica.	5	2	2B							
97Y	Permeability & Mica.	6	2	2B							
98K	Motor Operated	8	3	3B							
98K2, 98T, 98T2	Permeability & Mica.	6	2	2B							
99K, 99T	Motor Operated	8	3	3B							
K105	Rocker Bar	8	1	1B5							
U106	Permeability & Mica.	6	2	2B							
U109	Motor Operated	8	3	3B							
U115	Permeability & Mica.	5	2	2B							
U119	Permeability & Mica.	6	2	2B							
U121	Permeability & Mica.	5	2	2B							
U122E	Permeability & Mica.	6	2	2B							
U123	Permeability & Mica.	5	2	2B							
U124, U125	Permeability & Mica.	6	2	2B							
U126	Motor Operated	8	3	3B							
U127E	Permeability & Mica.	5	2	2B							
U128, U129, U130, U132, U134	Motor Operated	8	3	3B							
811K, 812K, 813K, 816K	Motor Operated	8	3	3B		4C	5B	6A	7H, 7K4	8A	
910KG, 911K	Motor Operated	8	3	3B							
RADIO PRODUCTS											
925-16R, 930-16R	Motor Operated	8	3	3B		4B	5B	6D	7H, 7K4	8C	
935-11S, 940-11S	Motor Operated	8	3	3B		4B	5B	6D	7H, 7K4	8C	
Motor Car Conversion Unit	Touch-O-Matic	5	2	2A			5A				
SEARS-ROEBUCK											
4487, 4488, 4587, 4590	Flash Tuning		9	9H							
4610, 4666	Telephone Dial	11	1	1C	1C1				7A		1C8
4667, 4677, 4681	Dual Mica	8	2	2A				6B			
4687	Telephone Dial	11	1	1C	1C1			6A	7A, 7K1		1C8
4688	Moto-Matic	12	9	9B							
4766	Telephone Dial	11	1	1C	1C1				7A		1C8
4767, 4777, 4781	Dual Mica	8	2	2A				6B			
4786	Telephone Dial	11	1	1C	1C1				7A		1C8
4787	Telephone Dial	11	1	1C	1C1			6A	7A, 7K1		1C8
4788	Moto-Matic	12	9	9B							
4791, 4792	Telephone Dial	11	1	1C	1C1				7A		1C8
4798	Dual Mica	8	2	2A				6B			
4799	Moto-Matic	12	9	9B							
6002	Dual Mica	5	2	2A				6B			
6003, 6004	Cam and Lever	8	1	1A12							
6008, 6009, 6016, 6017	Cam and Lever	6	1	1A3, 1A4							
6022	Cam and Lever	6	1	1A3, 1A4							
6025	Rocker Bar	5	1	1B2							
6036, 6038	Cam and Lever	8	1	1A12							
6052, 6053, 6054, 6055	Rocker Bar	4	1	1B1							
6072	Cam and Lever	6	1	1A3, 1A4							
6073	Rocker Bar	4	1	1B1							
6074	Cam and Lever	8	1	1A12							
6102, 6103	Rocker Bar	4	1	1B1							
6104	Rocker Bar	5	1	1B2							
6109, 6110, 6111, 6112	Cam and Lever	6	1	1A1							
6113, 6114, 6115	Cam and Lever	6	1	1A1							
6119, 6120	Rocker Bar	5	1	1B2							
6125	Rocker Bar	5	1	1B1							
6130	Rocker Bar	5	1	1B2							
6133	Cam and Lever	6	1	1A3, 1A4							
6140	Cam and Lever	8	1	1A12							
6151	Rocker Bar	5	1	1B2							
6152, 6153, 6155, 6156	Cam and Lever	8	1	1A13							
6157	Dual Mica	6	2	2A				6B			
6158, 6159	Cam and Lever	8	1	1A13							
6190	Rocker Bar	5	1	1B1							
6208, 6209	Cam and Lever	6	1	1A3, 1A4							
6214, 6218	Rocker Bar	4	1	1B1, 1B2							
6261	Rocker Bar	4	1	1B2							
6262	Rocker Bar	5	1	1B2							

MANUFACTURER AND MODEL	Type	No. of Buttons	REFERENCE Section	REFERENCE Sub-Division	SPECIAL DESCRIPTION Button Indexing Adj.	Tuning Motor	Push-Button Station Selector Switch	Transfer Device Manual to Automatic	Audio Silencing Circuit and AFC Release During Tune	Station Selecting Commutator Device	Stop or Lock-In Mechanism
SEARS-ROEBUCK—Cont.											
6263, 6264, 6265	Cam and Lever	6	1	1A3, 1A4							
6301	Rocker Bar	5	1	1B1							
6320	Rocker Bar	4	1	1C3							
6321, 6322, 6323, 6324	Rocker Bar	5	1	1B2							
6325, 6335, 6336, 6337	Rocker Bar	6	1	1B2							
6359, 6360, 6361	Rocker Bar	6	1	1B2							
6362, 6363, 6364	Rocker Bar	6	1	1B2							
6407, 6408, 6409	Rocker Bar	4	1	1B3							
6421, 6424	Rocker Bar	5	1	1B2							
6425, 6435, 6436	Rocker Bar	6	1	1B2							
6437, 6438, 6439	Rocker Bar	6	1	1B2							
7215	Dual Mica	5	2	2A, 2B			5B	6D			
7216, 7217, 7218	Moto-Matic	15	9	9B							
7219	Dual Mica	6	2	2A							
7225	Rocker Bar	4	1	1B1							
7227	Dual Mica	4	2	2A, 2B							
7228	Motor Operated	8	3	3B							
7230	Permeability & Mica.	6	2	2B							
7235, 7236	Telephone Dial	10	1	1C							
7241, 7241A, 7242, 7242A	Motor Operated	8	3	3B							
7245	Permeability & Mica.	6	2	2B							
7250	Dual Mica	4	2	2A, 2B							
7807	Rocker Bar	6	1	1B1							
SENTINEL											
124A, 124AE	Dual Permeability	4	2	2B							
125AE	Dual Permeability	5	2	2B							
127B, 128B, 130B	Rocker Bar	4	1	1B							
138AE, 139UE, 140B, 140BE	Rocker Bar	6	1	1B							
141AE, 143L, 144X, 144XE	Rocker Bar	4	1	1B							
145AE	Dual Permeability	9	2	2B							
149A, 149AE	Rocker Bar	5	1	1B							
158AE	Rocker Bar	6	1	1B							
SONORA											
BA	Cam and Lever	4	1	1A1							
EA, FA	Rocker Bar	6	1	1B1							
GA	Dual Permeability	7	2	2B							
QA	Rocker Bar	6	1	1B1							
RA	Dual Permeability	7	2	2B							
TD	Rocker Bar	6	1	1B1							
TW, TWU, TX, TXF, TY	Rocker Bar	4	1	1B2							
SPARTON											
738	Dual Mica	6	2	2A			5B				
1068	Triple Mica	6	2, 9	2A, 9K			5B	6A			
1078, 1078X, 1089	Triple Mica	6	2	2A							
1268, 1288	Triple Mica	6	2, 9	2A, 9K			5B	6A			
1288P, 1288LXP	Triple Mica	6	2	2A							
1568	Triple Mica	6	2, 9	2A, 9K			5B	6A			
1588	Triple Mica	6	2	2A							
5018	Dual Mica	6	2	2A			5B				
5218	Triple Mica	6	2, 9	2A, 9K			5B	6A			
5518	Rocker Bar	4	1	1B1							
6218, 7618	Triple Mica	6	2, 9	2A, 9K			5B	6A			
8616	Dual Mica	6	2	2A				6B			
SPIEGEL											
1002, 1003	Rocker Bar	4	1	1B							
1104 to 1107 inclusive	Rocker Bar	6	1	1B							
2058, 2059, 2060, 2061	Motor Operated	8	3	3B							
2064, 2065, 2070	Dual Mica	5	2	2A							
2071, 4014	Dual Mica	5	2	2A							
4054	Motor Operated	8	3	3B							
4064, 4066, 4068, 4076	Dual Mica	5	2	2A							
STEWART-WARNER											
01-52, 01-53, 01-61, 01-61S	Dual Mica	5	2	2A							
01-81	Dual Mica	6	2	2A				6B			
07-63	Rocker Bar	4	1	1B2							
08-52	Dual Mica	5	2	2A							
08-81	Dual Mica	6	2	2A				6B			
010-52, 010-53	Dual Mica	5	2	2A							
91-51	Rocker Bar	4	1	1B2							
91-53	Dual Mica	5	2	2A							
91-61	Dual Mica	6	2	2A				6B			
91-62	Dual Mica	5	2	2A							
91-64	Rocker Bar	5	1	1B6							
91-71, 91-81	Dual Mica	6	2	2A				6B			
91-82	Dual Mica	8	2	2A							
91-111	Motor Operated	8	3	3B							
97-56, 97-56S	Cam and Lever	4	1	1A1							
98-51	Rocker Bar	4	1	1B2							
98-53	Dual Mica	5	2	2A							
98-61	Dual Mica	6	2	2A				6B			
98-62	Dual Mica	5	2	2A							
98-64	Rocker Bar	5	1	1B6							
98-71, 98-81	Dual Mica	6	2	2A				6B			
98-82	Dual Mica	8	2	2A							
98-111	Motor Operated	8	3	3B							
R-184, R-185, R-186	Magic Keyboard	15	9	9B							
910-51	Rocker Bar	4	1	1B2							
910-53	Dual Mica	5	2	2A							
910-61	Dual Mica	6	2	2A				6B			
910-62	Dual Mica	5	2	2A							
910-64	Rocker Bar	5	1	1B6							
910-71, 910-81	Dual Mica	6	2	2A				6B			
910-82	Dual Mica	8	2	2A							
910-111	Motor Operated	8	3	3B							

MANUFACTURER AND MODEL	Type	No. of Buttons	REFERENCE Section	REFERENCE Sub-Division	SPECIAL DESCRIPTION Button Indexing Adj.	Tuning Motor	Push-Button Station Selector Switch	Transfer Device Manual to Automatic	Audio Silencing Circuit and AFC Release During Tune	Station Selecting Commutator Device	Stop or Lock-In Mechanism
STROMBERG-CARLSON											
70, 72, 74	Te-Lek-Tor	8	3	3B		4B	5A	6G	7H	8C	
235, 245	Flash Tuning	6	2	2A			5B	6A			
255L, 260L, 260P	Flash Tuning	7	1	1C	1C5			6A	7F, 7K1		1C9
325, 335, 337	Dual Mica	6	2	2A							
340, 341, 345, 350	Dual Mica	8	2	2A							
360, 370	Motor Operated	8	3	3B							
405, 420	Dual Mica	6	2	2A							
430, 435	Dual Permeability	7	2	2B							
440, 450	Motor Operated	8	3	3B							
455	Dual Mica	6	2	2A							
460, 470	Motor Operated	8	3	3B							
480	Motor Operated	7	3	3B							
TRAV-LER											
436M	Rocker Bar	6	1	1B							
466M	Rocker Bar	4	1	1B							
1938 Automatic Tuning	Adjust. Index	12	1	1C	1C3						1C11
UNITED AMERICAN BOSCH											
850, 860	Motor Operated	14	3	3C	1C2	4B	5C	6A	7F		1C14
WARWICK											
9-46	Rocker Bar	4	1	1B1							
645	Dual Mica	5	2	2A			5B	6D			
WELLS-GARDNER											
A1, A2, A3 (1st Type)	Motor Operated	8	9	9C							
A1, A2, A3 (2nd Type)	Telephone Dial	17	1	1C	1C1				7A		1C8
A4, A5	Telephone Dial	17	1	1C	1C1				7A		1C8
A12, A13, A14, A15, A16	Dual Permeability	6	2	2B							
S2, T2	Dual Permeability	6	2	2B							
6C9	Cam and Lever	5	1	1A10							
WESTERN AIR PATROL											
1337, 1487, 1587	Motor Operated	8	3	3B							
WESTERN AUTO											
D689	Dual Permeability	6	2	2B							
D690	Motor Operated	10	3	3B							
D691	Motor Operated	8	3	3B							
D705, D714	Dual Permeability	6	2	2B							
D717	Cam and Lever	6	1	1A1							
D727	Motor Operated	8	3	3B							
D731	Cam and Lever	4	1	1A1							
D746	Cam and Lever	5	1	1A4							
D747	Cam and Lever	6	1	1A4							
D901	Dual Permeability	6	2	2B							
D910	Rocker Bar	6	1	1B5							
D920	Dual Permeability	6	2	2B							
D921	Rocker Bar	6	1	1B5							
D930	Dual Permeability	6	2	2B							
D941	Cam and Lever	4	1	1A1							
D976, D978	Cam and Lever	6	1	1A5							
1388	Dual Permeability	6	2	2B							
WESTINGHOUSE											
WR264	Permeability & Mica.	6	2	2B							
WR332, WR336	Motor Operated		3	3C							
WILCOX-GAY											
A33, A35	Telephone Dial	10	1	1C	1C2				7A		1C12
A36	Telephone Dial	10	1	1C							
A37, A40	Telephone Dial	10	1	1C	1C2				7A		1C12
A41	Telephone Dial	10	1	1C							
A42	Telephone Dial	10	1	1C	1C2				7A		1C12
A48, 7S5	Dual Mica	6	2	2A							
ZENITH											
4B314, 4B317	Dual Permeability	4	2	2B							
5G441, 5G442, 5G461	Permeability & Mica.	5	2	2E							
5M294	Permeability & Mica.	4	2	2E							
5S319, 5S327, 5S330	Dual Permeability	5	2	2B							
5S338, 5S339, 6B321	Dual Permeability	5	2	2B							
6D413, 6D414, 6D426	Permeability & Mica.	4	2	2E							
6D427, 6D446, 6D455	Permeability & Mica.	4	2	2E							
6J322, 6J357	Dual Permeability	5	2	2B							
6J436, 6J463	Permeability & Mica.	6	2	2E							
6M295	Triple Permeability	5	2	2B							
6M390	Ratchet Switch	5	2	2D							
6P418, 6P419, 6P428	Permeability & Mica.	4	2	2E							
6P429, 6P430, 6P447	Permeability & Mica.	4	2	2E							
6P448, 6P457, 6R485	Permeability & Mica.	4	2	2E							
6S341, 6S362	Dual Permeability	6	2	2B							
6S439, 6S469	Permeability & Mica.	5	2	2E							
6S511, 6S527, 6S528	Permeability & Mica.	4	2	2E							
6S546, 6S556	Permeability & Mica.	5	2	2E							
7J323, 7J368	Triple Permeability	6	2	2B							
7S323, 7S342, 7S343	Dual Permeability	6	2	2B							
7S363, 7S364, 7S366	Dual Permeability	6	2	2B							
7S432, 7S433, 7S434	Permeability & Mica.	5	2	2E							
7S449, 7S450, 7S458	Permeability & Mica.	5	2	2E							
7S459, 7S460, 7S461	Permeability & Mica.	5	2	2E							
7S462, 7S487, 7S488	Permeability & Mica.	5	2	2E							
7S490, 7S529, 7S530	Permeability & Mica.	5	2	2E							
7S547, 7S557, 7S558	Permeability & Mica.	5	2	2E							
7S585	Permeability & Mica.	5	2	2E							
8S443, 8S451, 8S463	Permeability & Mica.	6	2	2E							
8S531, 8S548, 8S563	Permeability & Mica.	6	2	2E							
8S568	Permeability & Mica.	6	2	2E							

MANUFACTURER AND MODEL	Type	No. of Buttons	REFERENCE		SPECIAL DESCRIPTION						
			Section	Sub-Division	Button Indexing Adj.	Tuning Motor	Push-Button Station Selector Switch	Transfer Device Manual to Automatic	Audio Silencing Circuit and AFC Release During Tune	Station Selecting Commutator Device	Stop or Lock-In Mechanism
ZENITH—Continued											
9S307, 9S324, 9S344	Triple Permeability	8	2	2B							
9S365	Dual Permeability	6	2	2B							
9S367, 9S369	Triple Permeability	8	2	2B							
10S443, 10S452, 10S464	Permeability & Mica.	6	2	2E							
10S470, 10S491, 10S492	Permeability & Mica.	6	2	2E							
10S531, 10S549, 10S566	Permeability & Mica.	6	2	2E							
11S474	Permeability & Mica.	6	2	2E							
12S345, 12S370, 12S371	Triple Permeability	8	2	2B							
12S445, 12S453, 12S471	Permeability & Mica.	8	2	2E							
12S475, 12S494	Dual Perm. & Mica	8	2	2B							
12S550, 12S568, 12S569	Dual Perm. & Mica	8	2	2B							
15S308, 15S346	Triple Permeability	8	2	2B							
15S372, 15S373	Triple Permeability	8	2	2B							
15S479, 15S495	Dual Perm. & Mica	8	2	2B							
1204 (7 Models)	Motor Operated		3	3A			5D				
1501 (6 Models)	Motor Operated		3	3A			5D				
S905 (7 Models)	Motor Operated		3	3A			5D				

SECTION 1

Mechanically Operated Manual Types

The tuning condenser is turned to the desired station reception position by direct mechanical effort of the person operating the receiver. Five general divisions of this type have appeared:

A—Linear (Typewriter key motion).
B—Rocker Bar (Plunger Type).
C—Rotary (Telephone dial motion).
D—Indent (Spot tuning).
E—Flash (Light indicator tuning).

A. Linear (Typewriter Key Motion)

Straight line motion of a key in a direction parallel to the tuning panel rotates the gang condenser by means of cams or levers whose position is pre-set to the desired station. Examples: Belmont (Belmonitor), cam and lever types.

B. Rocker Bar (Plunger Type)

Plunger motion operating through push rod, pawl and sector gear rotates gang condenser to pre-set position of desired station. Examples: Crosley, Continental, Howard, etc.

C. Rotary (Telephone Dial Motion)

This type of mechanism which appeared in late 1935 and in 1936 receivers has found widespread use and has been subject to many mechanical refinements. Gearing between dial mechanism and tuning condenser is arranged to allow almost 360° of dial movement.

1. Button or Indexing Adjustment.
   a. By splines or serrations on plunger co-operating with similar shaped grooves in an opening on a die-cast dial plate. Examples: Colonial, Emerson, Fairbanks-Morse, Philco.
   b. By locking nut on threaded plunger shaft.
      (1) Rotary adjustment of location of pin on radius about center of equally spaced buttons. Example: Wilcox-Gay, G. H. U.
      (2) Sliding adjustment in annular slot or series of overlapping slots around periphery of dial. Examples: Erla (Sentinel), Trav-ler, Philco (Cone-centric), G. H. U. (Teledial).
2. Stop or "lock-in" device.
   a. Latch Gate—A spring operated double gate allows depressed station pin to enter from either side but immediately locks after the pin enters to prevent rotation in either direction. Examples: Colonial, Fairbanks-Morse, G. H. U., Philco (Magnetic tuning).
   Note: In most instances the latch gate operates switching of AFC and audio silencing circuits. The latch gate principle is also employed in some motor-tuned systems. See 6A under "Transfer Devices."
   b. Slot in metal plate co-operating with depressed pin. Example: Wilcox-Gay.
   c. Floating Vane Stop—Vane is moved sideways by the depressed pin until it strikes fixed stops. Pin centers at same position when moved from either direction. Examples: Emerson, Trav-ler.

D. Indent (Spot Tuning)

Hardened steel ball is pressed into threaded groove in soft brass cylinder to provide indents to assist manual tune. Example: Galvin (Motorola Spot Tuning).

E. Flash (Light Indicator Tuning)

As set is tuned manually, with audio system silenced, a light flashes to indicate when tune to the desired station has been accomplished. Receiver "muting" is removed as station tune point is reached.

1. Operated by latch gate switching. Example: Stromberg-Carlson (Flash Tuning).
2. Operated by sliding contacts on dial and "muting" relay. Example: Noblitt-Sparks and Erla.

SECTION 1A

Cam and Lever Mechanisms

This device consists of a series of "heart-shaped" cams stacked on a shaft attached directly to the gang condenser. These cams are individually adjustable since they can be unlocked from the drive shaft by a tapered expansion sleeve which is controlled by a screw. Fig. 1 shows a front view of the tuning system. The levers shown at the front of the unit move through a distance of approximately 1¼ inches and in doing this turn the cams until the two lobes of the cam are aligned against the lever. This is the position corresponding to station tune.

Fig. 2 shows the appearance of this type of mechanical tuner from the front of the cabinet.

A typical cam and lever system (exclusive of dial construction) appears in Fig. 3 and operates as follows.

Heart cam "A" is held to the tuning shaft by means of friction washers "B." When a button is depressed, roller "C," on the end of the push-button lever "D," is forced against the heart cam. This causes the cam to turn until the roller reaches its lowest point.

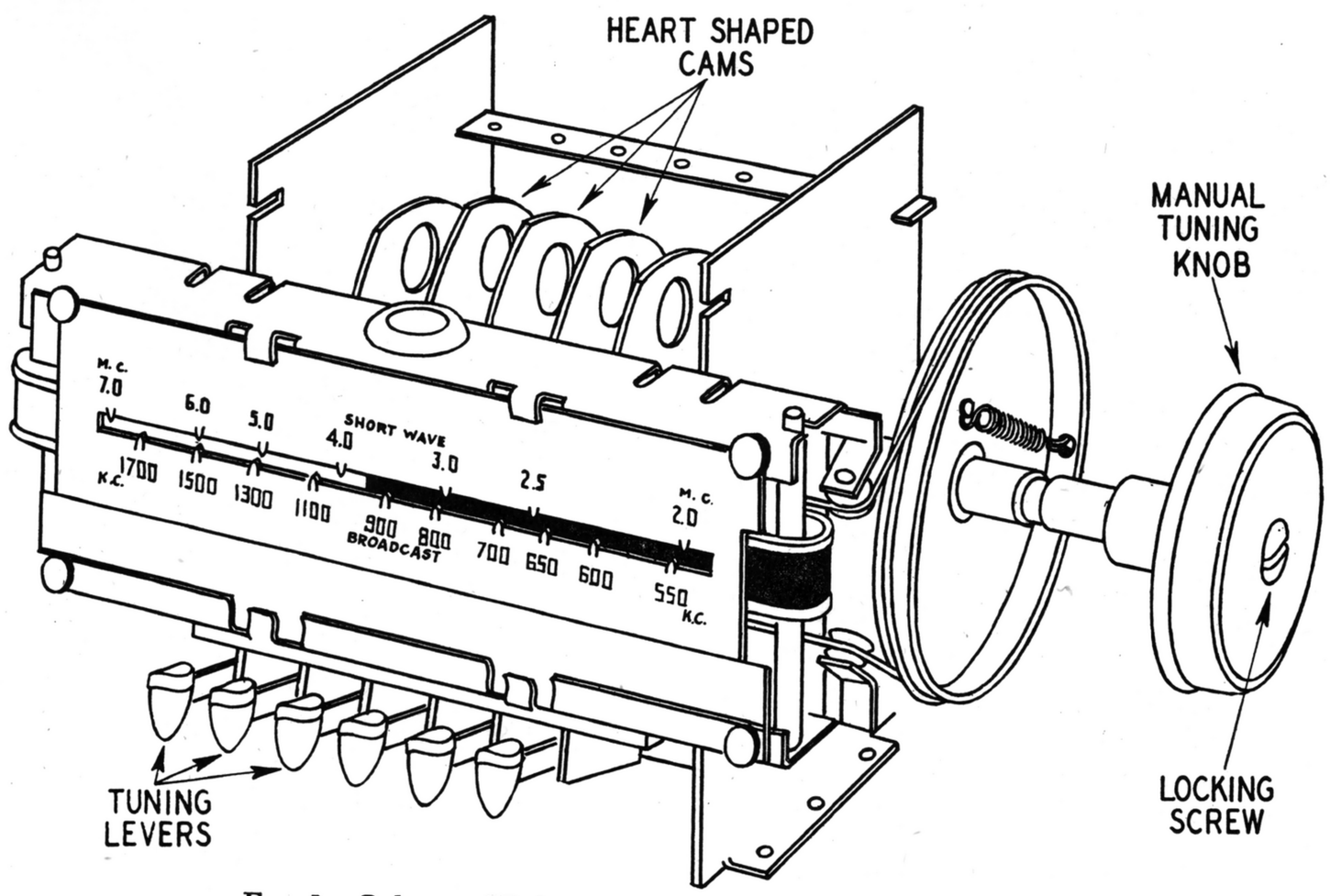

FIG. 1—*Belmont "Belmonitor" Tuning System—Front View*

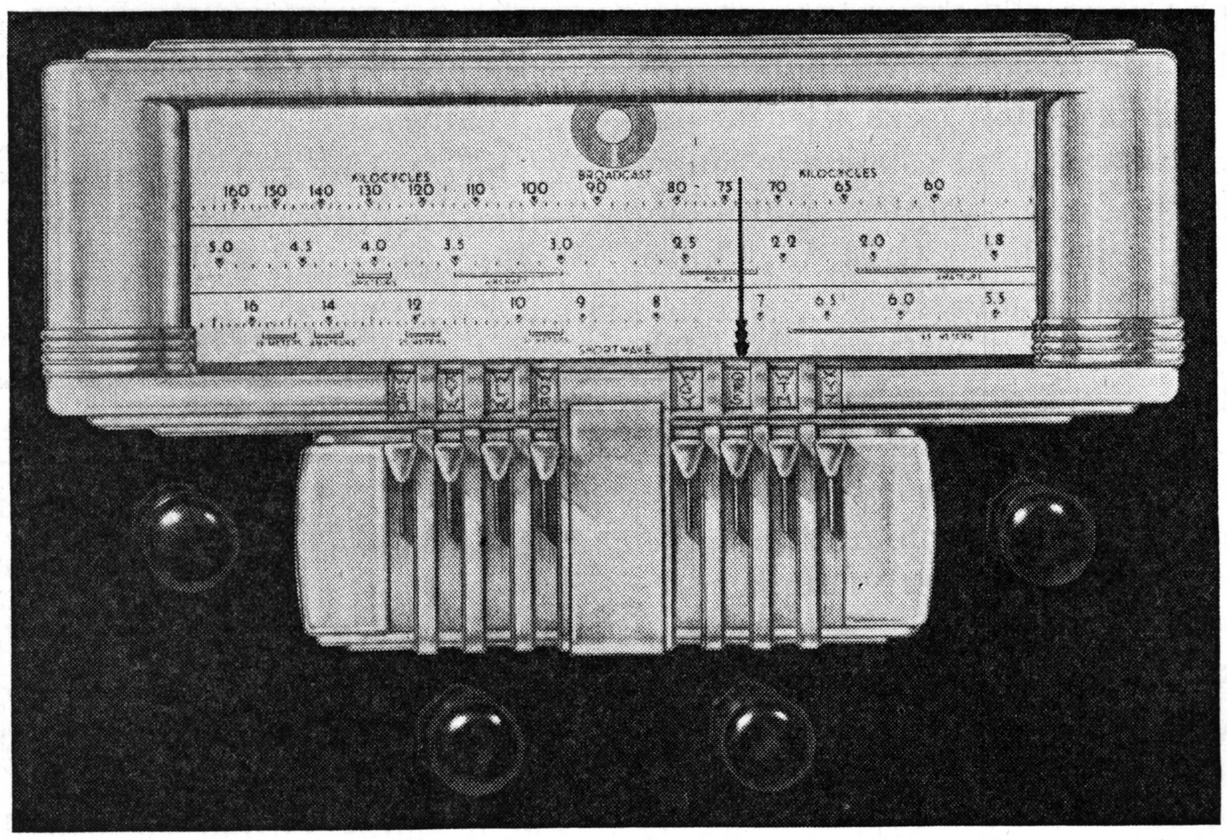

FIG. 2—*Belmont "Belmonitor" Tuner—Front of Cabinet*

To set up this type mechanism, the locking screw "E" is loosened, allowing the heart cams to slip freely between the friction washers. If a button is now depressed its corresponding cam will be turned without affecting any other cam. While holding the button down firmly, tune accurately to the desired station. When all the buttons have been set the locking screw should be tightened. This will hold the cams securely to the tuning shaft. Now, when any button is depressed, its corresponding cam will resume the position to which it was set, turning the gang condenser with it. For the location of the locking screw on various receivers see paragraphs 1A1 through 1A14.

Note 1A1

These receivers have the locking screw located in the center of the tuning knob as shown in Fig. 3. Unlocking is accomplished by turning this screw to the left by means of a small screwdriver or coin. To lock the tuner after the buttons have been set, turn the knob to its extreme clockwise position and tighten the locking screw.

Note 1A2

The lock screw on these receivers is a knurled screw located on the side of the receiver.

Note 1A3

The lock screw may be reached by removing the metal button in the end of the receiver.

Note 1A4

The locking mechanism on these receivers is a wing nut on the side of the dial assembly.

Note 1A5

Push in the tuning knob hard enough to make it latch. Rotate the knob to the left until it cannot be turned farther without forcing.

The knob will turn hard as the unlocking begins, then turn easily until the mechanism is entirely unlocked. To set stations, push in a button and the dial tuning knob at the same time so they will both stay latched in. While pressing firmly on the button, tune in the desired station by means of the tuning knob. Repeat this procedure for the remaining buttons. Before relocking the mechanism, release the latched button by pressing slightly on another button (Some models have a push-button release pin under the button assembly which should be pressed to unlatch the last button). Then latch the tuning knob again and rotate it to the right until it is tight.

Note 1A6

Pull the dial tuning knob all the way out and rotate it to the left to unlock the tuner. While holding a push-button down firmly, press in on the tuning knob and tune accurately to the desired station. Repeat this procedure for the other buttons. Pull the tuning knob all the way out and rotate it to the right until tight to relock.

Note 1A7

Pull out the "Reset" button (the last button to the right) and rotate it to the left until it cannot be turned any farther. Push in one of the buttons,

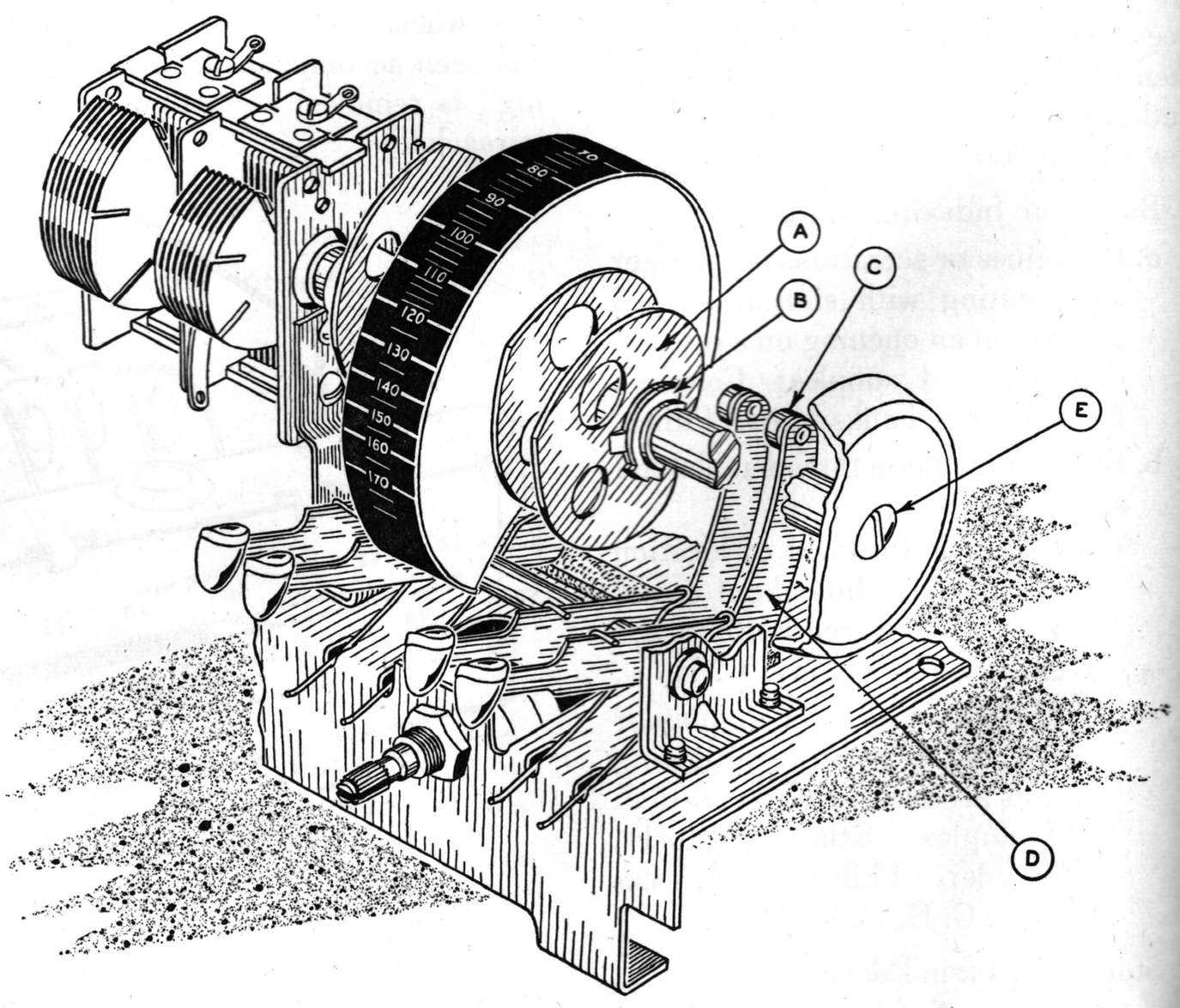

FIG. 3

and at the same time press in on the dial tuning knob, so that both will stay latched in. Then tune the station manually while holding in on the button. Repeat this procedure for the remaining buttons. When all the buttons have been set up, lock the mechanism by pulling the "Reset" button all the way out and rotating it clockwise as far as it will go.

Note 1A8

The locking screw will be found by looking at the back of the cabinet. Rotate the screw by means of the pin through the shaft.

Note 1A9

The locking screw is exposed by removing the push-button escutcheon. Push the tuning knob in and rotate it so that the pointer comes to the left end of the dial. Then with a small screwdriver push in the slotted shaft and turn it counter-clockwise about four turns. Press a button and while holding it in push in the tuning knob. Tune accurately to the desired station.

When all the stations have been set up, use the small screwdriver to push in and turn the slotted shaft clockwise. Do not tighten the shaft too much or the mechanism may be damaged.

Note 1A10

Loosen the locking screw by inserting a small screwdriver into the hole below the tuning unit and turning the screw counter-clockwise as far as it will go. Keep the manual tuning knob depressed with one hand, and with the other push the desired button. Tune in the station with the manual knob. When all the stations have been set up, the last button should be released. If the receiver has an "off" button, the other buttons may be released by pushing slightly on this button, otherwise push very slightly on one of the station buttons, being careful not to disturb its adjustment. Then retighten the lock screw.

Note 1A11

Remove the snap-in button from the dial escutcheon. Insert a screwdriver and unlock the mechanism by pressing in and turning the locking screw to the right. After setting up the buttons by the regular procedure as given at the first of section two, the mechanism may be locked by pressing in and turning the locking screw to the left until tight.

Note 1A12

Remove the volume control and tuning knobs. Remove the snap-in buttons that were covered by these knobs, allowing the escutcheon to be removed. Replace the tuning knob. Push in the knob and rotate it until the pointer comes to the left end of the dial. A slotted shaft will be found between the push-buttons and the tuning knob. Unlock the mechanism by turning this shaft as far to the left as it will go without forcing. To re-lock the mechanism, first turn the dial pointer to the right end of the scale. Then turn the slotted shaft as far as it will go clockwise.

Note 1A13

The escutcheon is held in place by four screws, otherwise the procedure is the same as that given in paragraph 1A12.

Note 1A14

Remove the snap-in button from the dial escutcheon. Insert a screwdriver and unlock the mechanism by pressing in and turning the locking screw as far as it will go to the left. After setting up the buttons by the regular procedure as given at the first of section two, the mechanism may be locked by pressing in and turning the locking screw to the right until tight.

SECTION 1B

Rocker Bar Mechanisms

The rocker bar type mechanical push-button tuner is one of the most popular of tuners. Illustrations 4 and 5 show two of the most frequently used variations of this general type. Fig. 4 illustrates a four button tuner of the type which can be set up without tools of any kind. Locking and unlocking adjustments are accomplished merely by twisting the button itself. Fig. 5 illustrates a five button tuner of the type having a separate lock screw exposed by removing the push-button.

Parts of the two tuners are lettered alike to show their similarity. "E" is the push rod to which the button "F" is attached. Pushing pawl "B," held in place by locking screw "D" and locking shoe "G," turns rocker bar "A" to a position corresponding to the setting of the pawl "B." Return spring "C" ordinarily keeps the pushing pawl away from the rocker bar. A sector gear, part of which is shown as "H" in Fig. 1, rotates the gang condenser to a position corresponding to the setting of the push-button mechanism. To set up this type mechanism, the locking screw "D" is first loosened enough to relieve the tension of shoe "G" on the pushing pawl "B." Then, when the button is depressed, the pushing pawl automatically aligns itself with the rocker bar. When the locking screw is again tightened the pawl will be held in position. Depressing the button will then cause the rocker bar to resume the same position it had when the button was locked.

Specific instructions for the several variations of this tuner are given in paragraphs 1B1 to 1B6 immediately following. Remember that the push-buttons will return the bar to the exact positions it had during set-up, so be sure you tune in the station as accurately as possible during the set-up operation.

Note 1B1

Turn the push-button counter-clockwise about 1 turn. (See Fig. 4.)

Depress the button as far as it will go, and while holding it in this position, tune manually to the desired station. Tighten the button while it is in this position.

Note 1B2

When the push-buttons are removed a screw will be found by the side of each push rod (See Fig. 5). This screw should be loosened. Push the rod in firmly by means of the screwdriver in the screw slot. While holding it in this position tune accurately to the desired station. Tighten the screw before releasing it.

Note 1B3

The locking screws will be exposed by removing the station tabs from the buttons. Insert a small screwdriver into the exposed hole and loosen the screw. Push the button all the way down and tune in the desired station. Then, while holding the button in securely, tighten the screw.

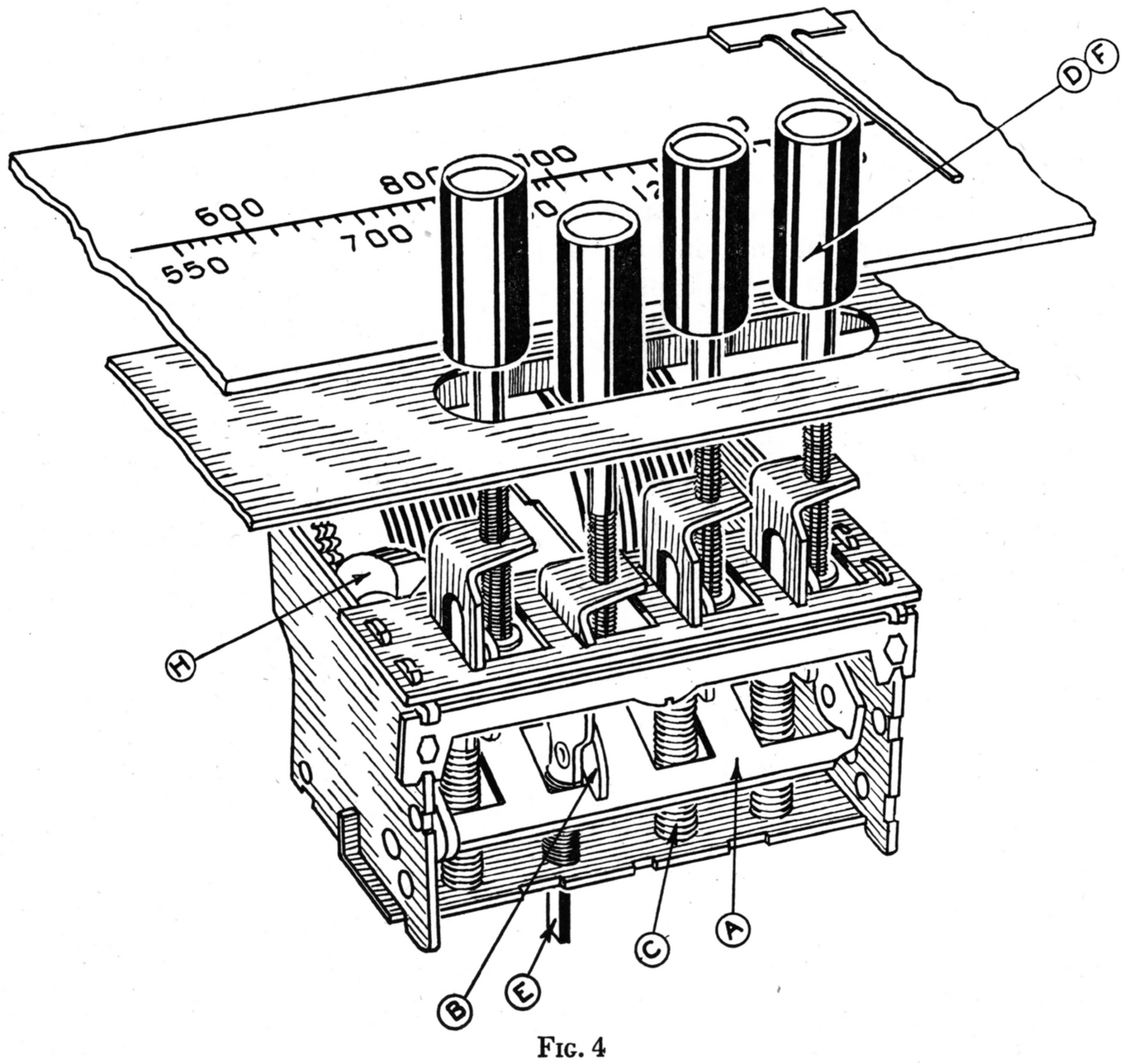

FIG. 4

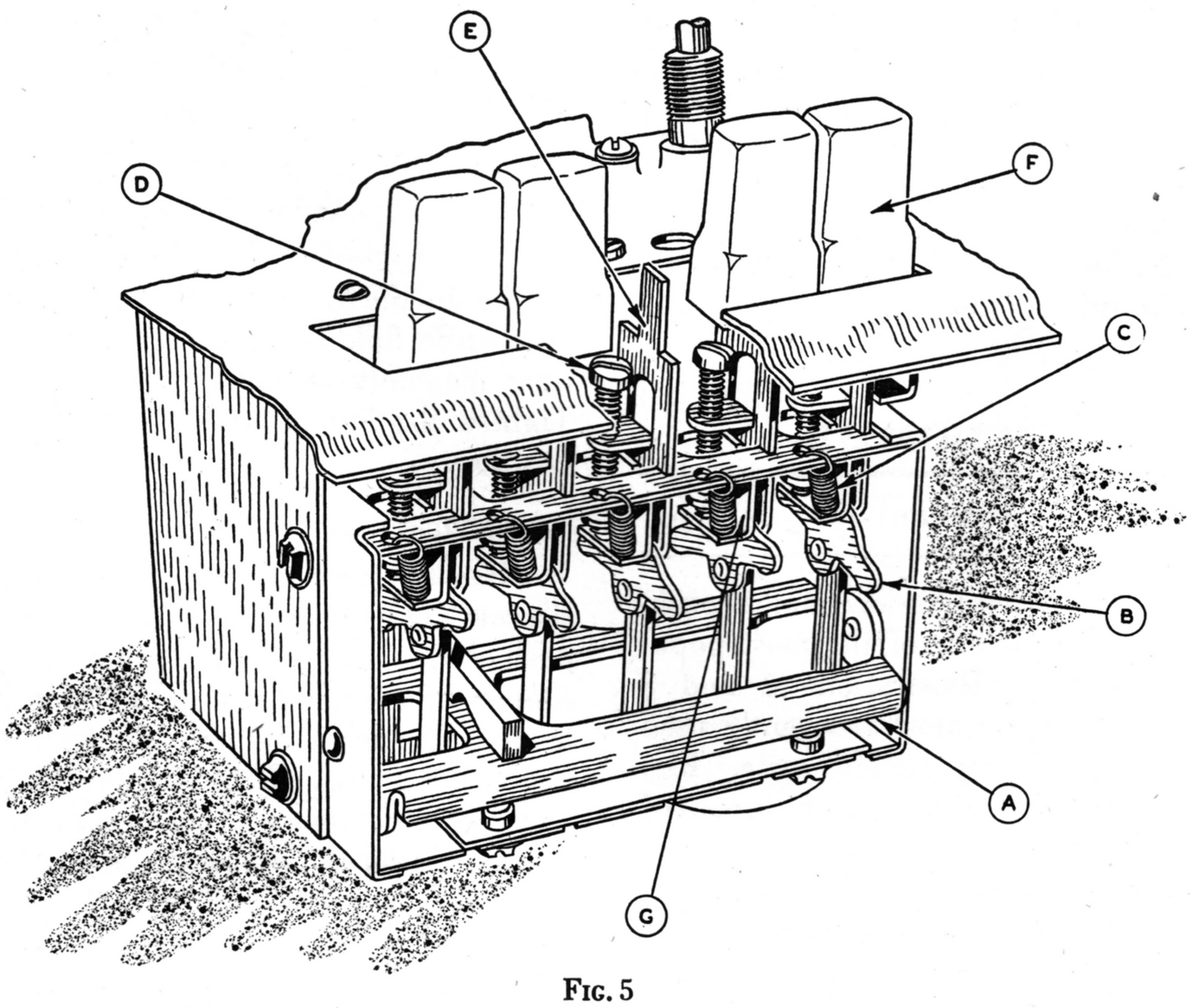

FIG. 5

Note 1B4

Remove the push-button trim plate by prying gently with a screwdriver. Press a button on which a station is to be set up. With the button held in firmly, insert a screwdriver into the hole to the right of the button and loosen the set screw. Then, with the button held down firmly, tune in the desired station. When the station is accurately tuned in, tighten the set screw and remove the screwdriver before releasing the button.

Note 1B5

Remove the station marker tabs. Reach through the station marker recesses with a small screwdriver and loosen the push-button rods. With a push-button rod held in firmly with the screwdriver, tune manually to the desired station. Then tighten the screw. Do not turn the screw more than a quarter turn after it begins to grip.

Note 1B6

Remove the push-button escutcheon. A screw will be found by the side of each button. Loosen this screw and push the push-button rod in firmly. Tune manually to the desired station. Then tighten the screw and release the button.

SECTION 1C

Mechanical Station Button or Indexing Adjustment

In all of the mechanically operated manual types and a few of the motor driven types the station selecting button itself provides the adjustment of the indexing pin which arrests rotation of the gang condenser at the proper point for station tune. In most models the pin or lever is attached to the opposite end of the push-button plunger and is held away from the dial mechanism by a coiled or flat spring. The series of button plungers are usually attached to a dial plate which in turn drives the gang condenser through a gear train so proportioned as to allow almost 360° of dial plate rotation. This constitutes the familiar "telephone" dial type of drive mechanism. As the plunger is depressed and the dial rotated in the same operation the indexing pin moves forward and is arrested in its rotary motion by some type of stop or lock-in device (See Section 1C7). The precise position at which the condenser rotation stops is adjustable, by one of the following methods described, to allow set-up of the receiver to a group of desired stations after which the adjustment is locked in place.

Note 1C1

The splined, serrated or straight knurl type of indexing adjustment has probably been employed in more of the manually tuned sets than any other type. Its action can be understood from a study of Figs. 6, 7, and 8. The grooves on the plunger slide freely in co-operating grooves in the dial plate so that the plunger may be readily pushed into the opening in the dial plate but may not be rotated unless unlocked in some manner for adjustment.

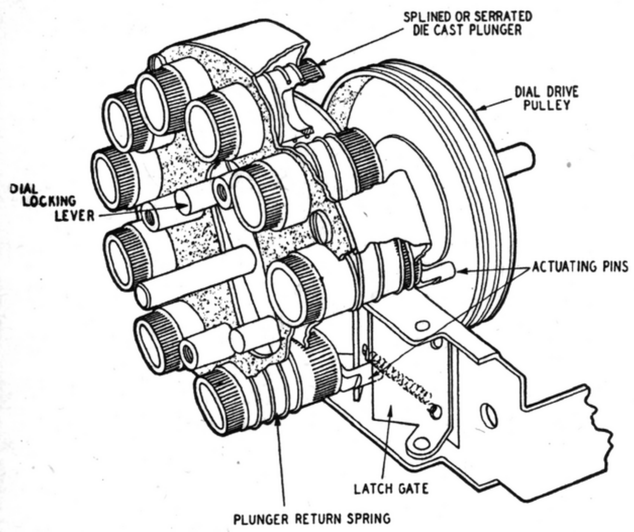

FIG. 6—*Colonial Indexing Adjustment*

COLONIAL—Fig. 6 shows by means of a line drawing cutaway view the action of the Colonial indexing adjustment. The dial locking lever when rotated a few degrees toward the left unlocks the mechanism and allows the die cast plungers to be pushed in until the serrated portion clears the grooves in the aperture of the dial plate. When this is done the plungers may be rotated so that the actuating pin can be correctly located for station tune. A reverse rotation of the locking lever prevents subsequent motion of the plunger beyond the serrations.

EMERSON—Fig. 7 shows a similar serrated type of adjustment. In this case the outer ornamental dial plate is removed during set-up operations. Its place is taken by a thin metal disc held in place by the knurled face nut. This disc has a single semi-circular notch in its periphery which may be adjusted to allow any one button to be moved forward while holding the rest of the buttons in place. Thus a button under the action of its spring will move forward sufficiently to allows its serration to clear those of the housing after which it may be rotated so that the button pin is in the correct position for station tune.

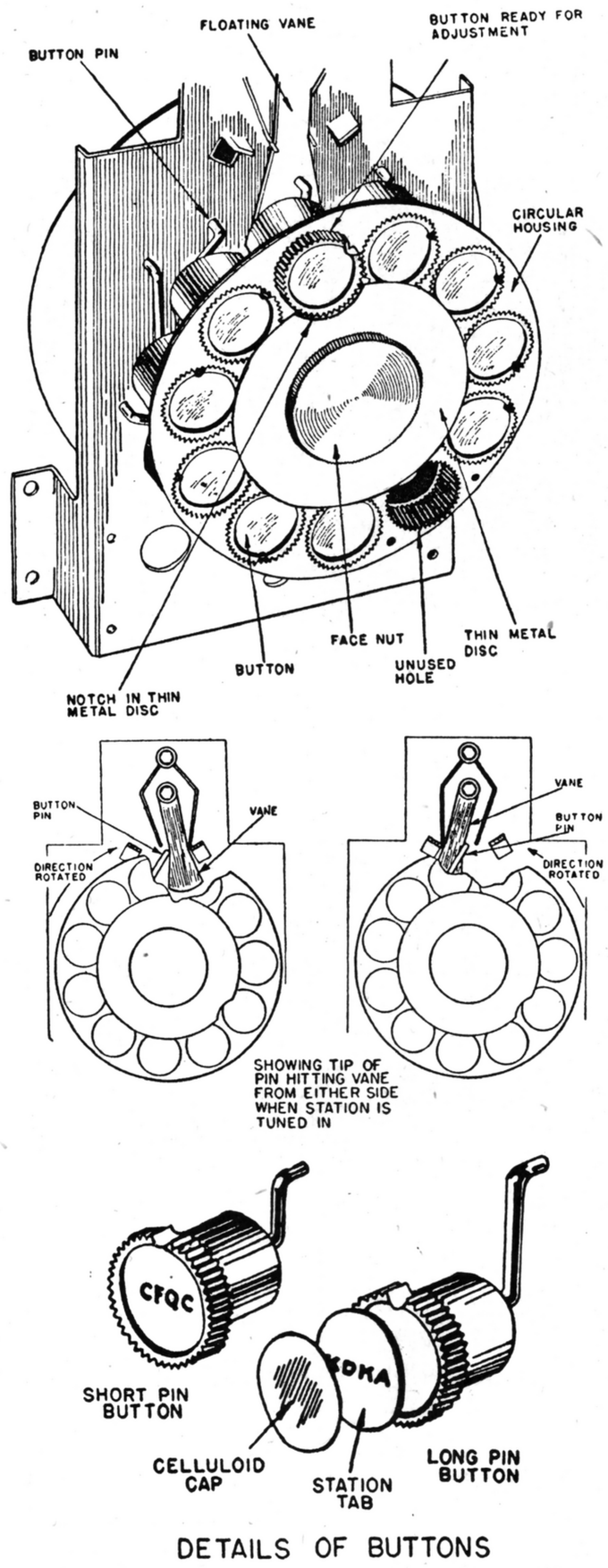

FIG. 7—*Emerson Indexing Adjustment*

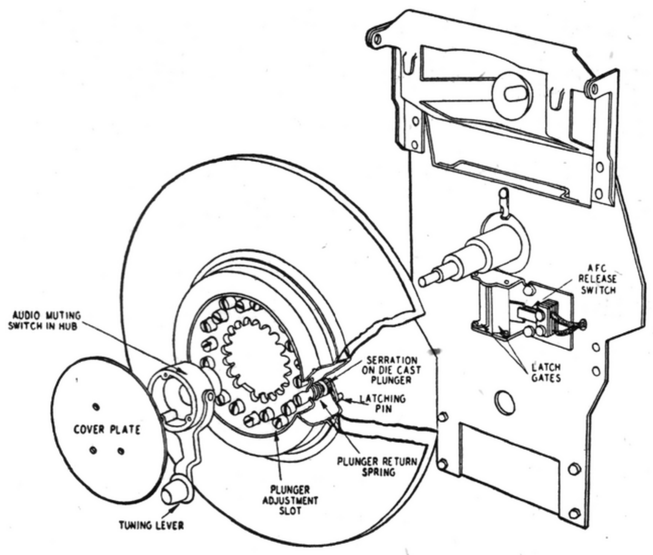

FIG. 8—*Philco Automatic Dial*

PHILCO—Fig. 8 shows a line drawing of the details of the Philco Automatic Dial. A diecast plunger similar to those previously described operates in grooves in the rear of the housing. The method of adjustment differs from the foregoing in that the plunger may readily be moved from one groove to another after the front plate has been removed by depressing it against the action of its spring until the serrations clear the opening in the rear of the housing. This may be done with a screwdriver since the head of the plunger has a slot to receive the screwdriver.

Similar mechanisms employing serrated plungers may be found in the mechanical models of Fairbanks-Morse, General Household Utilities, and Wells-Gardner.

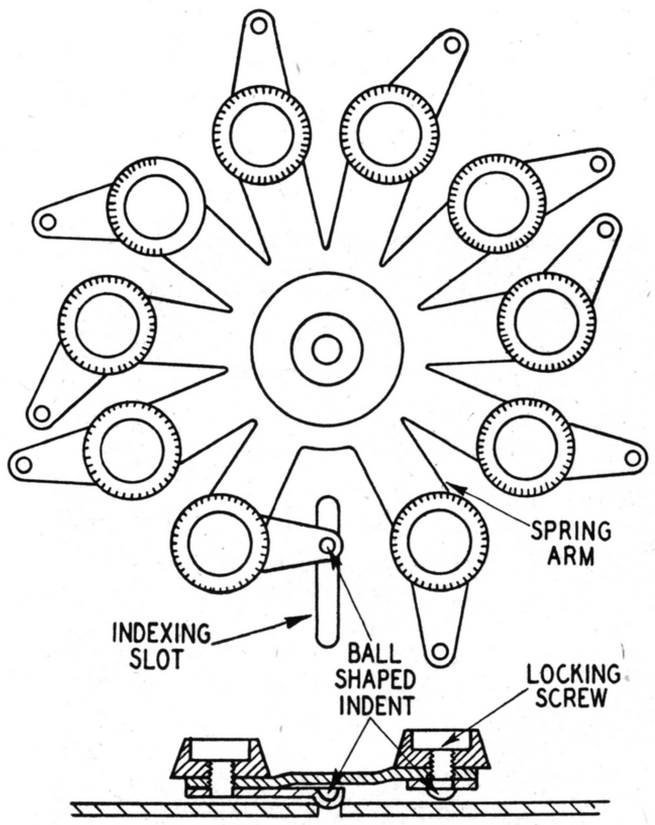

FIG. 9—*Wilcox-Gay Automatic Dial Assembly*

Note 1C2

An alternate method of locking the station selecting button is by means of threaded lock nuts on the plunger shaft.

WILCOX-GAY—Fig. 9 shows one of the simplest of automatic dial assemblies. The station buttons are located at the ends of radial flat spring members which are so shaped as to hold the button away from contact with a slotted plate on the front of the receiver. These radial members are attached to the dial drive shaft. Each of the buttons carries a cam at whose end is a ball-shaped depression which engages a fixed slot in a stationary plate attached to the chassis. The cam may be unlocked and allowed to rotate around the button center by unscrewing the button itself which acts as a lock nut.

The Galvin, G. H. U., United American Bosch, and Westinghouse motor-driven systems employ the lock nut principle of adjusting station plungers.

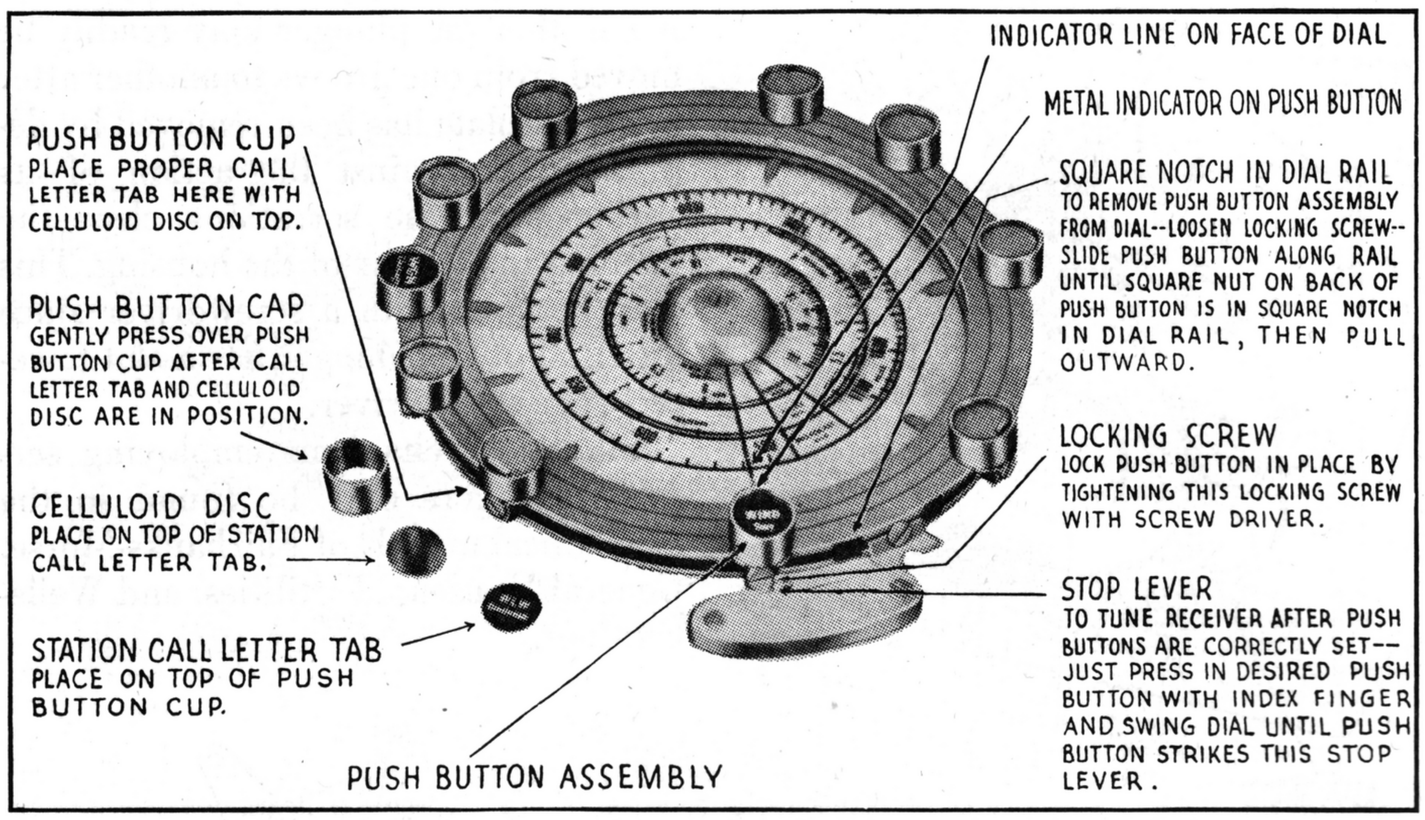

FIG. 10—*Erla-Sentinel Push-Button Dial*

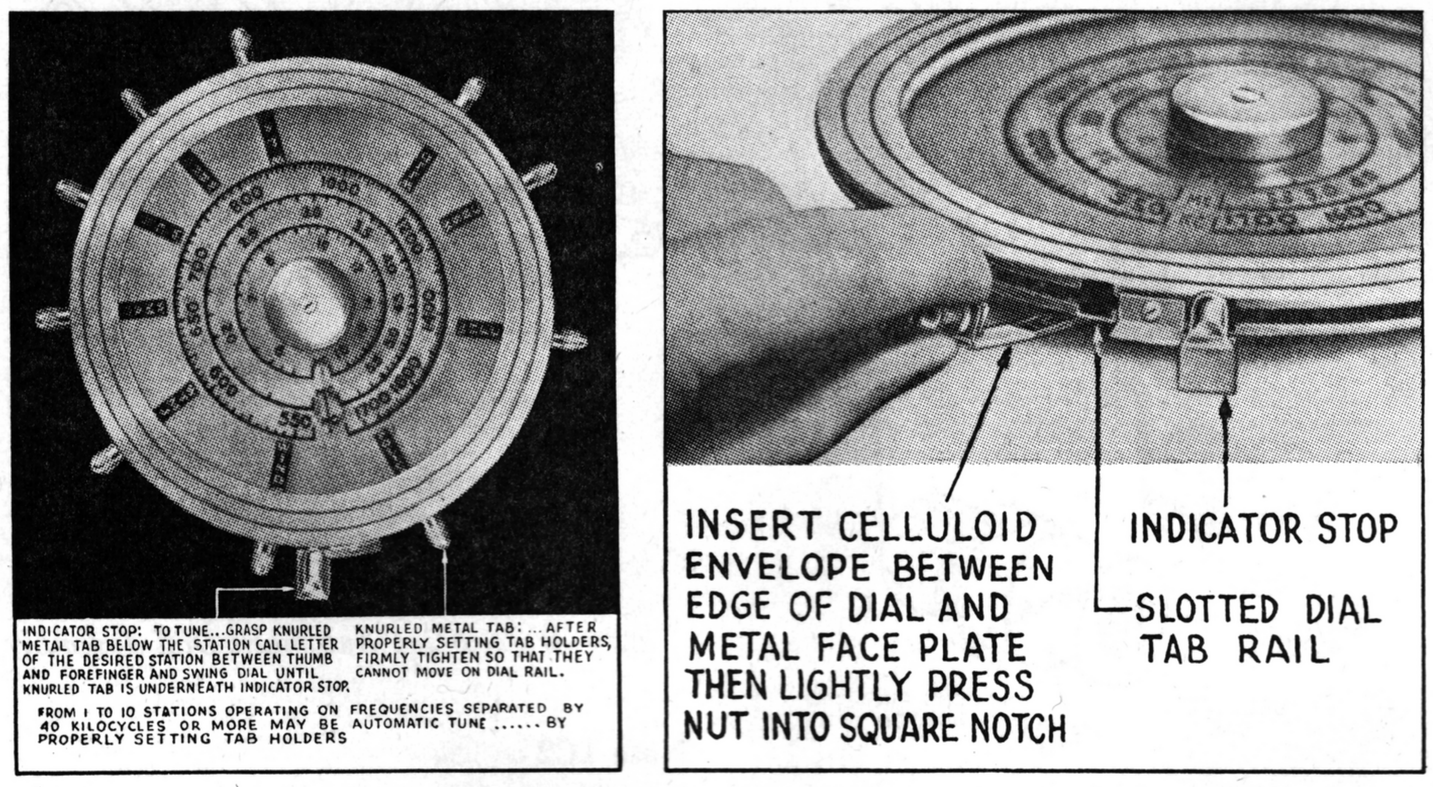

FIG. 11—*Erla-Sentinel "Automatic Tune Wheel" Dial*

Note 1C3

This method of pre-setting the position of the station button plungers employs the screw locking principle of Note 1C2 in combination with annular shaped slots in the dial plate concentric with the dial center.

ERLA—The Erla "Push-Button Dial" and "Automatic Tune Wheel" dial have the station plungers and tabs locked in a slot around the outer rim of the dial as shown in Figs. 10 and 11 by means of a lock nut sliding within the dial rail.

PHILCO—The "Cone-centric" tuning system employs small metal cones which are locked in place in a circular slot as shown in line drawing 12. Two small holes near the apex of the cone allow the insertion of a special tool through the hollow center of the tuning knob. This permits the cones to be loosened, moved along the slot and tightened in the desired position in a single operation as the dial is adjusted to tune on a desired station. Subsequent selection of the station is accomplished with accuracy by centering the conical depression of the tuning arm over the desired station cone.

TRAV-LER—Figs. 13 and 13A illustrate the simple use of the annular slot and lock nut for setting of button positions. In this case stations may be set even on adjacent channels since the buttons are arranged on two radii with an overlap of range.

Note 1C4

In the flash tuning systems of Erla and Noblitt-Sparks the station indicator adjustments operate in annular slots in a fixed member or plate while an electrical contactor is carried by the moving dial mechanism causing an indicator light to flash as each of the desired stations are successively tuned in. Audio silencing which is operative between stations is removed as the contacts are made. Audio silencing details of these systems are covered more fully in Section 7.

NOBLITT-SPARKS—Figs. 14 and 14A show rear and front views of the "Phan-

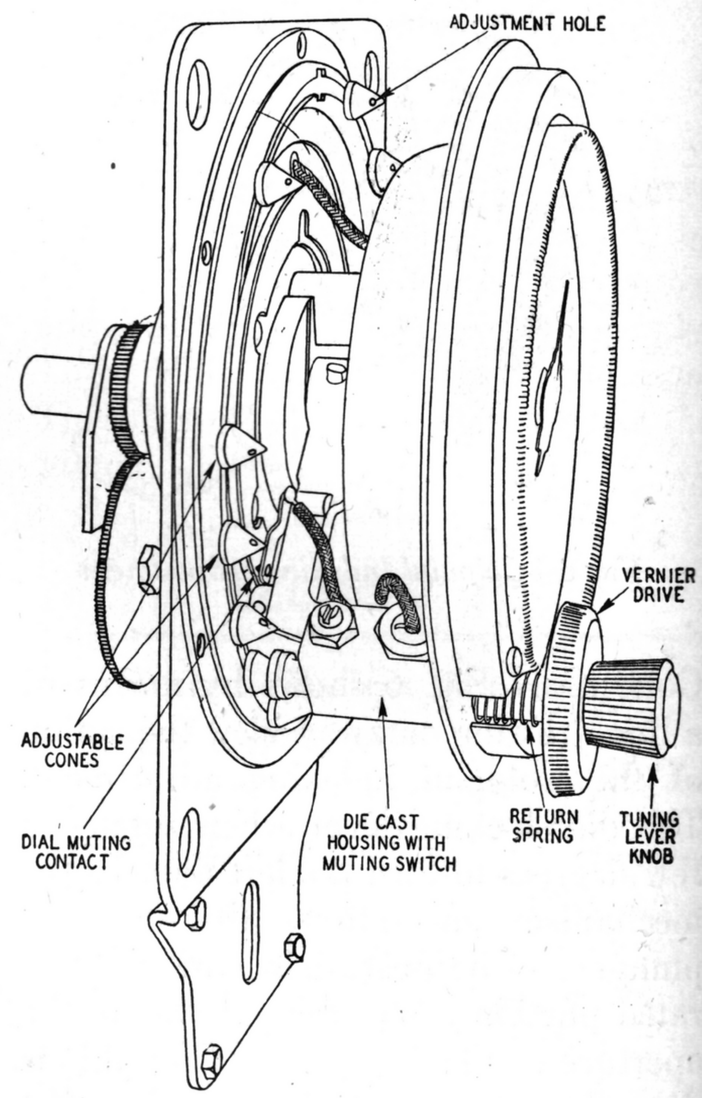

FIG. 12—*Philco "Cone-centric" Tuning Mechanism*

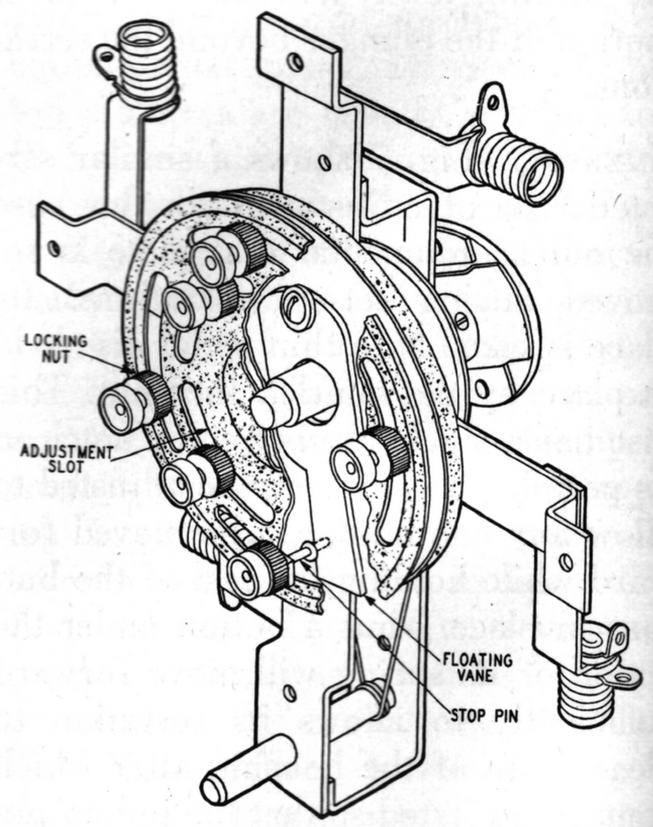

FIG. 13—*Trav-ler Annular Slot and Lock-Nut System*

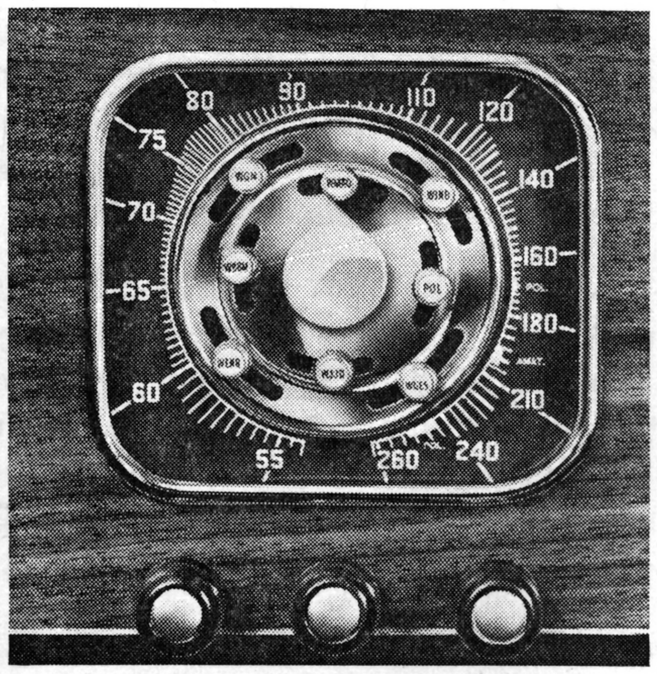

FIG. 13A—*Trav-ler Dial*

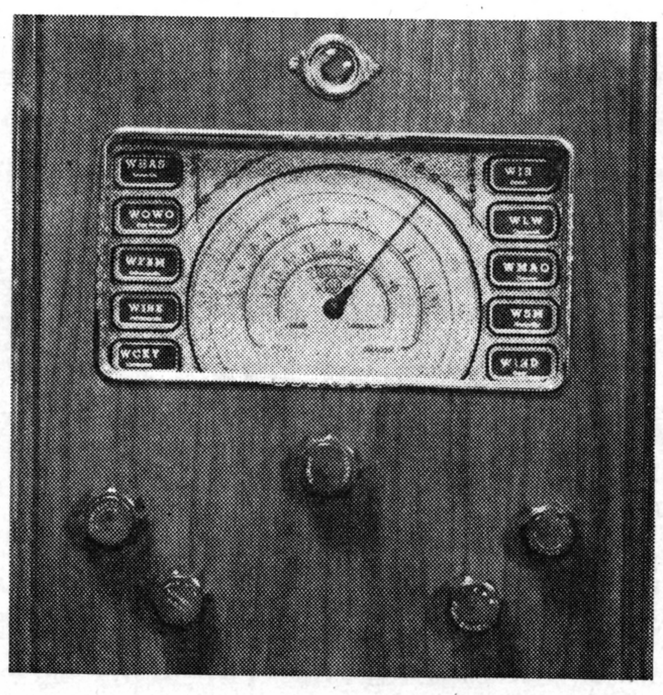

FIG. 14A—*Noblitt-Sparks (Arvin) "Phantom Tuning"—Front of Dial*

tom" tuning dial of the Arvin models which employ the flash tuning principle. Contacts are movable along the annular slots shown and as the station positions are successively passed in manually tuning the receiver the lights in panels along either side of the dial indicate the station to which the receiver is tuned. Adjustment of position of the contactors is accomplished by unlocking them by means of their screw thread and subsequently relocking them in the required positions.

ERLA—The Erla Flash Tuning dial employs a similar system except that station tabs are employed which are set along a circular guide rail at the edge of the dial. Rapid and Flash tuning are accomplished by a lever which operates independently from the conventional rotary vernier tuning knob.

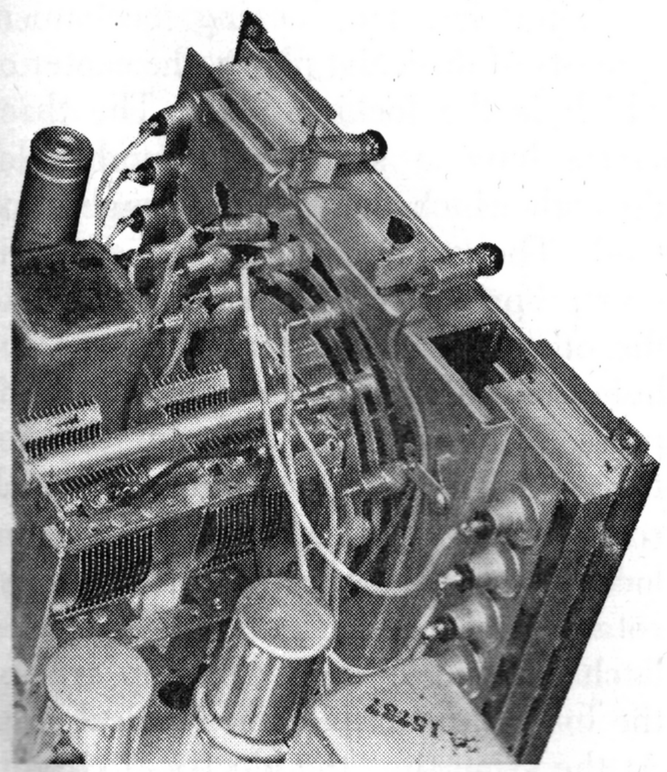

FIG. 14—*Noblitt-Sparks (Arvin) "Phantom Tuning"—Rear View*

Note 1C5

An alternative system of "Flash" tuning of novel design is that offered by Stromberg-Carlson. This system employs a series of thin discs or contactors which operate in conjunction with an electrical gate as shown in Figs. 15 and 15A. When the large knurled clamping nut is released, a contactor disc may be located in the center of the electrical gate while a station is tuned manually. The knurled nut is then tightened while the contactor clamping frame is held rigidly to prevent accidental rotation of either the gang condenser or the contactor disc. The contactor discs are insulated from the frame and individually connected to station indicator lamps one of which is illuminated as each contactor disc centers in the electrical gate. Audio silencing and AFC release functions are performed by contacts in the electrical gate (See Section 7).

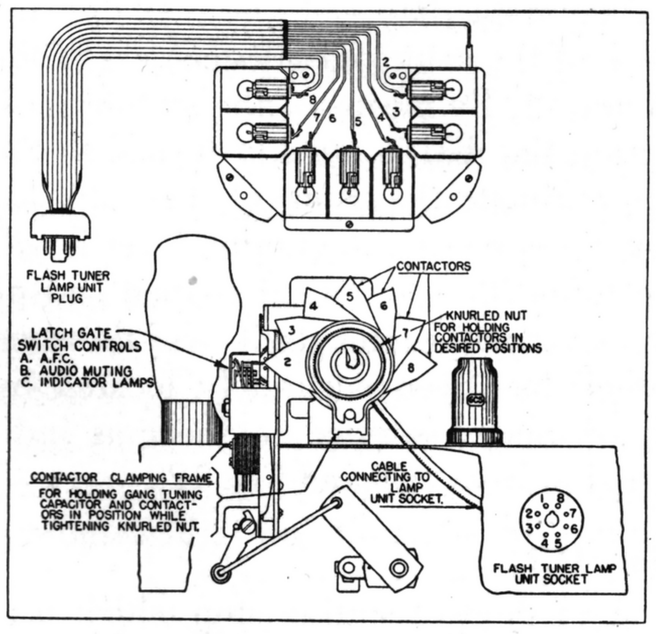

FIG. 15—*Stromberg-Carlson "Flash-Tuning" System*

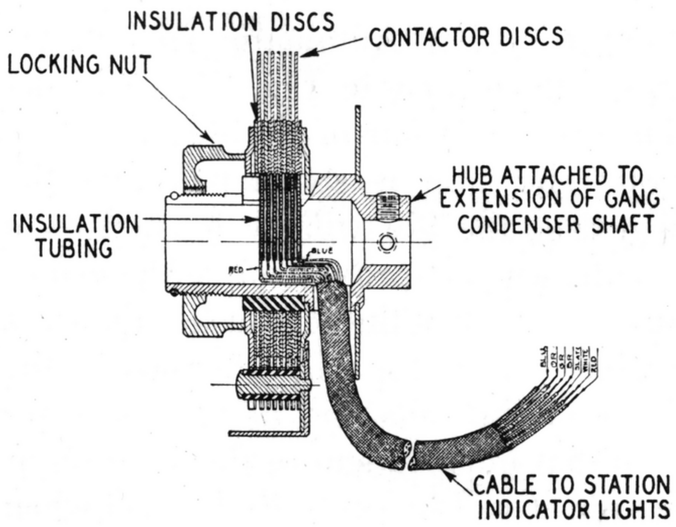

FIG. 15A—*Stromberg-Carlson "Flash-Tuning" System*

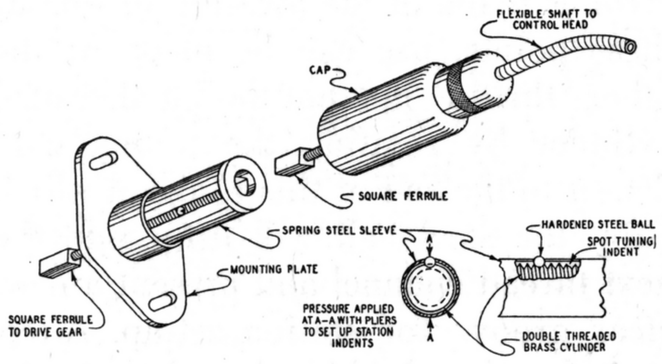

FIG. 16—*Galvin (Motorola) "Spot Tuning" Mechanism*

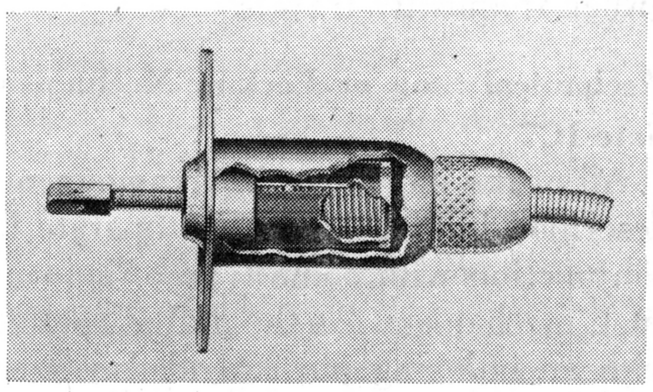

FIG. 16A—*Galvin (Motorola) "Spot Tuning"—Exterior*

Note 1C6

A unique application of mechanical automatic station selection to motor car receivers has been made available in several Motorola models. This device, known as "Spot Tuning," is illustrated in Figs. 16 and 16A. It consists of a compact mechanism in a cylindrical housing attached to the exterior of the motor car receiver by means of the mounting plate. It constitutes a link in the driving system between the flexible shaft from the control head and the gang condenser driving gear system. Since it is connected directly adjacent to the gang condenser it is not subject to back-lash difficulties. Its operation is as follows: A soft brass cylinder carries a double V thread and is surrounded by a spring steel sleeve of cylindrical form having a longitudinal slot. This slot

serves as a guide to retain a hardened steel ball in one of the threads. As the flexible shaft is rotated in tuning the receiver the steel ball is caused to "walk" along the thread. If after a station is accurately tuned to resonance, pressure is applied to the steel ball and sleeve at points AA (See Fig. 16) with a pair of gas-pliers, an indent is produced in the brass cylinder which subsequently will act as a mechanical indexing point for automatic tuning. In this manner all of the desired automatic station points are set up in turn. In the event that an error is made in the location of one of these points, use can be made of the other thread in the double-threaded cylinder by rotating the tuning condenser to the end of this range at which point the steel ball will drop into the next thread channel and present a new, clear groove for station set-up. Alternatively the double thread may be employed for two separate sets of automatic station selections as in two separate localities between which the car owner frequently travels.

Mechanical Stop or Lock-in Mechanism

Note 1C7

All of the indexing pin arrangements described in Notes 1C1-1C6 operate in conjunction with some type of stop or latch mechanism. As the dial is rotated with an indexing pin extended a fixed stop must be provided to arrest the motion of the pin at the desired tune point. In many cases this stop also functions to remove the automatic frequency control bias momentarily and thus allow control to be regained on the desired station. Stop mechanisms are employed on all of the mechanically operated manual types and also on a few of the motor driven types in which case they replace the electrical commutation device normally used.

Note 1C8

One of the most popular types of lock-in mechanisms is the latch gate, illustrated in Figs. 6 and 8, page 151. This consists of a pair of hinged gates normally held closed by a spring mechanism. As the extended plunger pin approaches the gate it strikes one of the pair of plates causing it to move inward until the pin passes the edge of the plate. As soon as the pin has passed the edge of the plate, the latter returns to its closed position. At this point the pin strikes the edge of the opposite open plate and is thus locked from rotation in either direction. Fig. 6 shows one of the plungers with its pin engaged in the latch gate.

Examples of use of the latch gate are: Colonial, Fairbanks-Morse, G. H. U., Philco, and Wells-Gardner.

Note 1C9

In the Stromberg-Carlson "Flash Tuning" receiver the latch gate, whose contactor mechanism was described in Note 1C5, the gate mechanism does not latch the end of the contactor disc against further rotation but merely arrests motion by interposing additional friction as shown in Fig. 15. This detent principle which indicates the point of tune without preventing further rotation is also employed in the Motorola "Spot Tuning" as described in Note 1C6.

Note 1C10

The Philco "Cone-centric" latching principle is a novel method of assuring accuracy of location of the tuning drive. The approximate location of desired local stations are printed upon the dial (a separate dial scale is available for each of the principal sales centers of the country). By means of the station indication the dial is quickly turned to the approximate location of the station. Upon depressing the tuning lever it will be found that a conical shaped end of the lever will center itself over the cone which has been accurately located by the dealer or service engineer as indicated in Note 1C3 and Fig. 12.

Note 1C11

A method of station stop which permits of very simple construction employs a floating vane operating between fixed stops.

EMERSON—The Automatic Dial mechanism illustrated in Fig. 7 clearly delineates the action of the floating vane stop. The stop is so shaped that the center of the pin will be located on a line drawn vertically through the center of the dial when the pin pushes the vane against either stop. In other words the shape of the vane and its thickness are such that independent of the position of the pin it will be centrally located when approaching the stop from either direction. Note—In using this type of mechanism the operator should be instructed to withdraw the finger from the button directly and thus prevent motion of the dial away from the stop since the vane arrests motion in one direction only.

TRAV-LER—The Trav-ler mechanism is similar to the Emerson type previously described with the exception that the stop occurs on the tuning hub rather than on two symmetrically spaced stops as in the former mechanism. This will be evident from an inspection of Fig. 13.

Note 1C12

A simple positive lock-in mechanism is employed in the Wilcox-Gay receiver whose button adjustment has been described in Note 1C2 and illustrated in Fig. 9. The end of the cams attached to the button have a hemispherical detent which drops into a vertical slot when the dial is rotated toward the index or bottom position. When this occurs, further motion in either direction is not possible. Upon removing the finger from the button, the spring arm to which the button and cam are attached withdraws the detent from the notch.

Note 1C13

The Motorola "Electric Automatic Tuner" of the motor-driven type, shown in Fig. 17, employs a method of locking a depressed station button which is very similar to that used in some of the ladder type push-button switches. The button plunger has a groove and shoulder running around its circumference. This serves to lock a button "in," when it is pressed. The button is held by a locking plate which drops behind this shoulder. The locking mechanism consists of three flat plates, the center of which is the locking plate. The three plates have a series of round holes through which the button plungers extend. The center or locking plate is under spring tension with respect to the other two which tends to keep the holes out of line. When a button is pressed the shoulder on the plunger forces the holes into alignment which releases any previously held button and locks the button selected into place. A rotating mechanism carrying a slotted latch gate, locks upon the stop arm of the button, forming a mechanical stop. At the same time the electrical circuits of the motor are opened by jack spring contacts within the slotted latch gate.

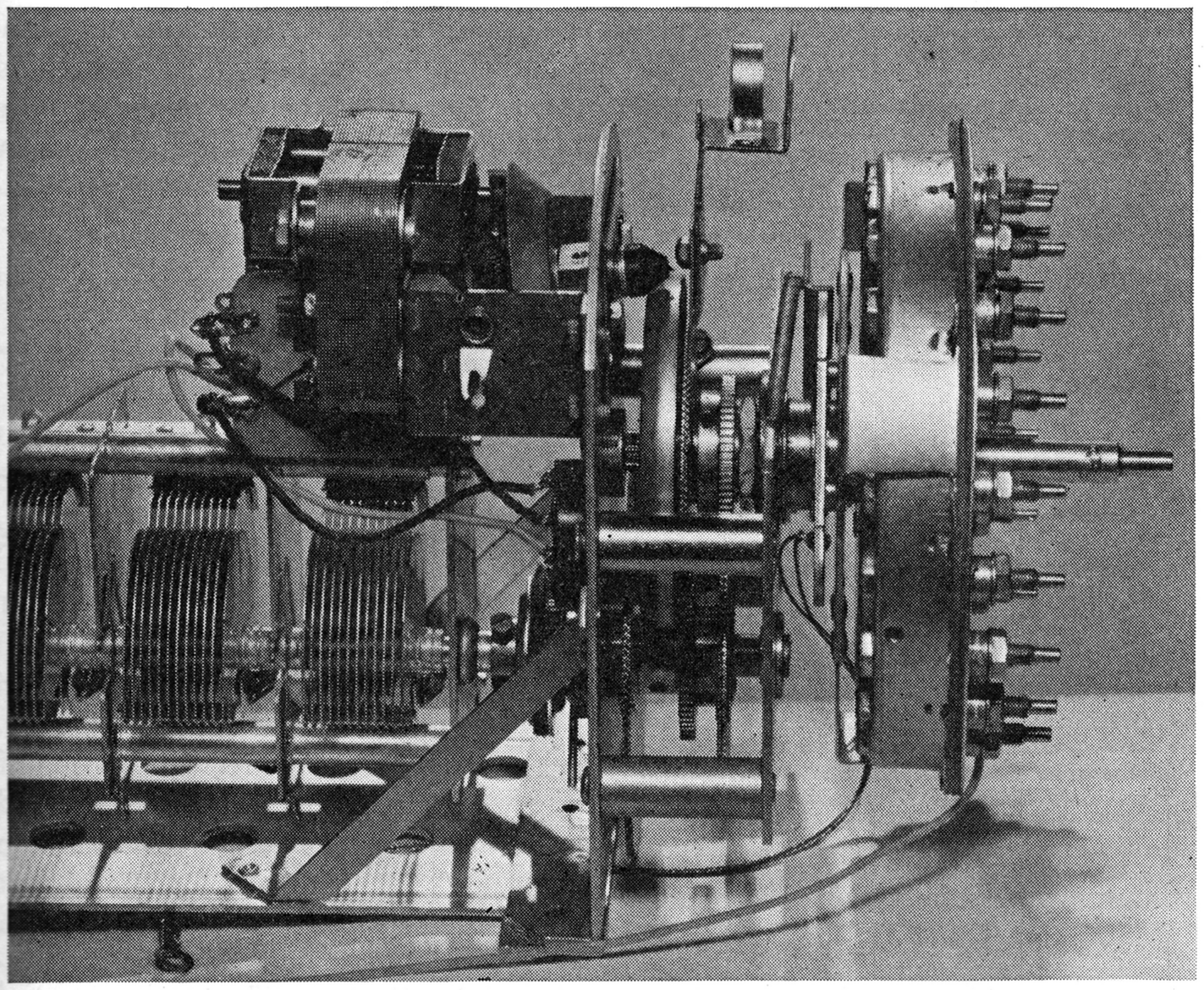

Fig. 17—*Galvin (Motorola) Electric Automatic Tuner*

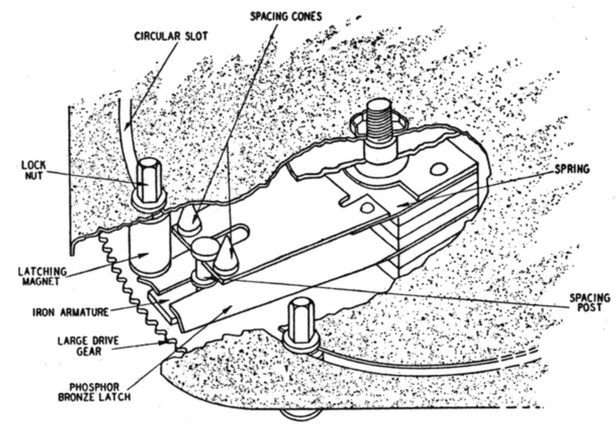

Fig. 18—*Galvin (Motorola) "Press-Button Tuning" System*

Note 1C14

In the United American Bosch and Westinghouse receivers the latch gate is carried on a rotating member driven by the tuning dial. This latch locks upon the end of the tuning lever of a depressed button in a manner similar to that described in Note 1C13.

Note 1C15

The Motorola "Press-Button Tuning" magnetic latch differs in so many respects from other latching systems as to merit special consideration. Its operation is illustrated in Figs. 18 and 19, and circuit diagram 20. In Fig. 18 is shown a cutaway drawing of the magnetic latching system as used in the Motorola motor-tuned motor car receivers. A moving latch system attached to a large drive gear is caused to stop and lock at desired station tune positions by selectively energized magnets. The magnets are mounted by means of threaded studs in a circular slot with their pole faces directly above the path of an iron armature. A phosphor bronze member, fashioned as a two-prong fork is interposed between the armature and the magnet pole face. The spacing of this bronze latch and the armature from the pole faces of the magnets is accurately held by means of the spacing post and spacing cones shown in Fig. 18. Reference to the sequence diagram shown in Fig. 19 and the schematic circuit of Fig. 20 will assist in clarifying the operation of the device. "A" of Fig. 19 shows a cross-section view of the magnet, locknut, armature and bronze latch gate. This view represents the condition before the tuning cycle is initiated. Pressing a desired station button (See Fig. 20) closes the switch by first connecting a desired latching magnet to the plus A supply followed by the completion of the A supply through the reversing switch and tuning motor. As the motor starts driving the large gear which carries the armature and latch bar, the armature approaches the position of the desired station locking magnet as shown in "B" of Fig. 19. The magnet attracts the armature. As the armature carries with it the latching spring, this is depressed and drops over

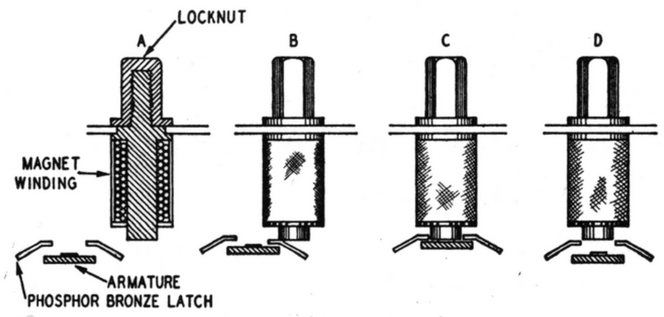

Fig. 19—*Galvin (Motorola) "Press-Button Tuning"—Action Diagram*

the pole face of the magnet. "C" of Fig. 19 shows the condition which exists as the armature is held against the magnet pole face with two sides of the fork firmly pressed against the pole face and preventing further rotation of the armature and consequently of the gang condenser. When the operator's finger is withdrawn from the push button the motor contacts break, thus preventing further rotation of the gang condenser. Then the magnet supply circuit is

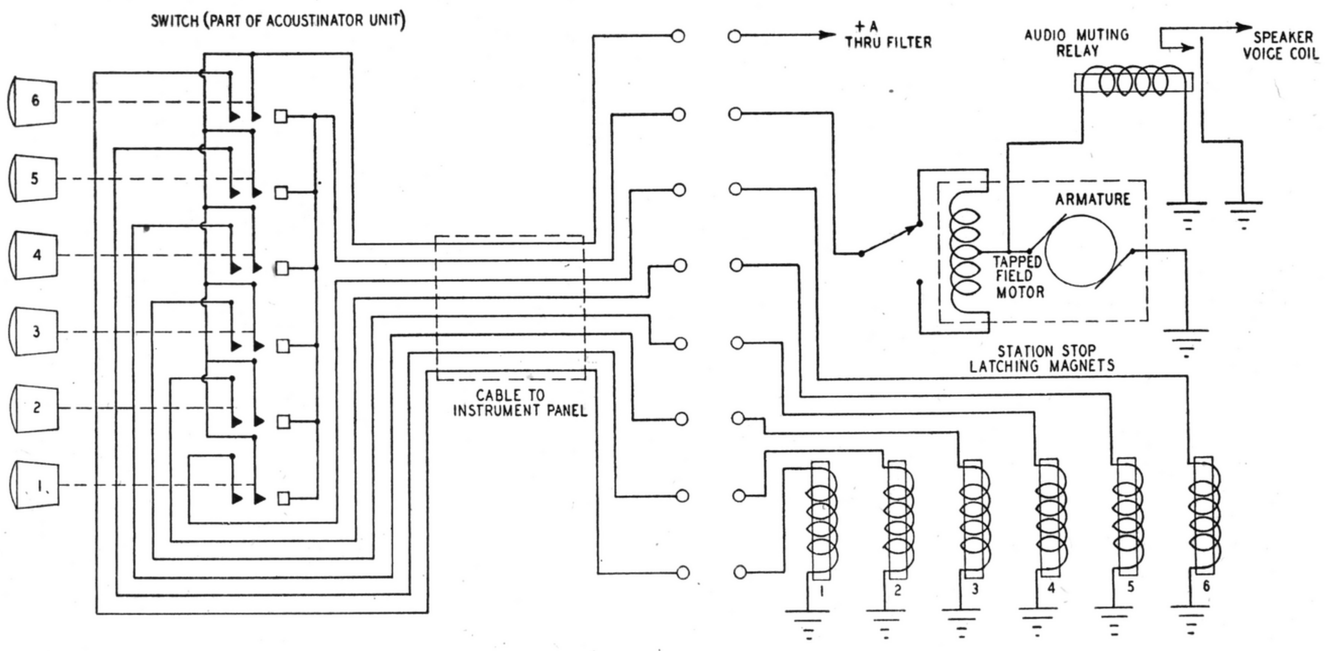

Fig. 20—*Galvin (Motorola) "Press-Button Tuning"—Circuit Diagram*

broken, allowing both the armature and latch spring to be pulled away from the magnet as shown in "D" of Fig. 19. This leaves the system clear and ready to move, on the next station-selecting impulse. Details of motor reversal and audio muting relay action will be covered more completely in their respective sections.

SECTION 2

Tuned Circuit Substitution Types

These systems usually employ one of three switch constructions for selecting the pre-calibrated tuned circuits which are substituted for the usual variable condenser tuned input and oscillator circuits. First is the latching or ladder type push-button switch, second the rotary type similar to the waveband change types, and third, the ratchet mechanism switch.

Several types of pre-set circuits have been used, namely, mica trimming condensers, permeability tuned coils, and combinations of mica trimming and permeability tuned units.

In addition to the selection of the pre-tuned circuits, some form of transfer switching from automatic to manual tuning must be provided on all automatically tuned receivers with the exception of those models which operate on selected broadcast stations only and do not have a gang tuning condenser. Probably the most popular methods of accomplishing this changeover are by inclusion of the transfer switch in the push-button selector unit, or the addition of an extra position on the wave change switch.

Immediately following is a brief outline of the various systems employing trimmer condenser tuning.

1. Ground side switching with push-button switch.
   The low potential or ground side of the trimmers are connected to the switch.
   a. Two trimmer circuits (no RF stage). Examples: Garod, Howard, Pacific Radio (Chicago), Wilcox-Gay.
   b. Three trimmer circuits (RF stage, detector input and oscillator). Examples: Noblitt-Sparks, Sparks-Withington.
2. High side switching with push-button switch.
   The push-button switch is connected on the high potential or grid side of the RF circuit. This allows transfer switching to gang tuning by one button of the switch.
   a. With transfer switching by other means than selector switch. Examples: Pacific Radio (Los Angeles), Stromberg-Carlson.
   b. With transfer switching on push-button station selector switch. Examples: Air King, Erla, General Electric, Warwick.
3. No gang condenser—selected broadcast only. Examples: Howard, Sparton, Wilcox-Gay.
4. Rotary type station selector switch. Examples: Fada, Radio Products (Motor Car Touch-O-Matic).

SECTION 2A

Description of Condenser Tuned System

A typical condenser substitution system is shown in pictorial fashion in Fig. 21, with the schematic diagram of the rear wave switch section shown in Fig. 22. The various parts are separated in these illustrations in such a manner as to show the operation to advantage and do not necessarily represent the actual placement of the parts in a receiver.

The circuit illustrated is that of a two-band receiver with both push-button and continuous tuning on the broadcast band. The wave change switch has been given an extra or extreme counter-clockwise position to transfer the circuit connections from manual to automatic tuning. In this position the switch terminal connected to the gang condenser stator is open and the grid, broadcast secondary and push-button selected trimmer condenser are all connected in parallel. The upper bank of condensers serve to tune the oscillator grid circuit, while the lower bank of condensers are used to tune the detector input circuit. The circuit illustrates ground side switching with the high potential side of the trimmer condensers connected in parallel. In this case the shoe holders of the sliding contact shoes on the push-button switch are made of metal and serve to connect the low potential sides of the selected condensers to frame or ground as shown in the schematic diagram of Fig. 22.

SECTION 2B

Description of Permeability Tuned Systems

Fig. 23 shows the schematic wiring diagram of a model employing a combination of compression tuned (trimmer) input circuits and iron core tuned oscillator circuits. Fig. 23A shows an "under-chassis" view of this receiver. As in the previous diagram a position of the wave change switch has been used to transfer from manual to automatic operation. The portions of the circuit used in automatic tuning have been shown by darker lines than the remainder of the diagram. The iron core trimmed coils are individually connected in parallel with an auxiliary secondary coil coupled to the broadcast oscillator plate winding. This coil tuned by condenser C is resonant to a frequency below the broadcast band so that when it is paralleled by the iron core winding the frequency is increased to the desired point in the band. The condenser is of special construction and utilizes a ceramic dielectric which has a negative temperature coefficient to compensate the positive temperature drift of coil and tube.

The introduction of the dual permeability tuner made possible a tuned circuit substitution type push-button tuner requiring only one adjustment for setup. Tracking between the oscillator and the antenna is permanently fixed at the factory and rarely requires adjustment in the field.

Fig. 24 illustrates a typical dual permeability tuned coil. In order to show clearly all the parts of the coil it is shown both phantom and cutaway.

Coils "D" are wound on a fiber tube "G." To facilitate tracking, the coil nearest the front is made the oscillator coil.

Brass stud "F" carries the iron cores "A," causing both to be moved simultaneously when a station is being set up. The cores are held a fixed distance apart by spring "B" and spacing nut

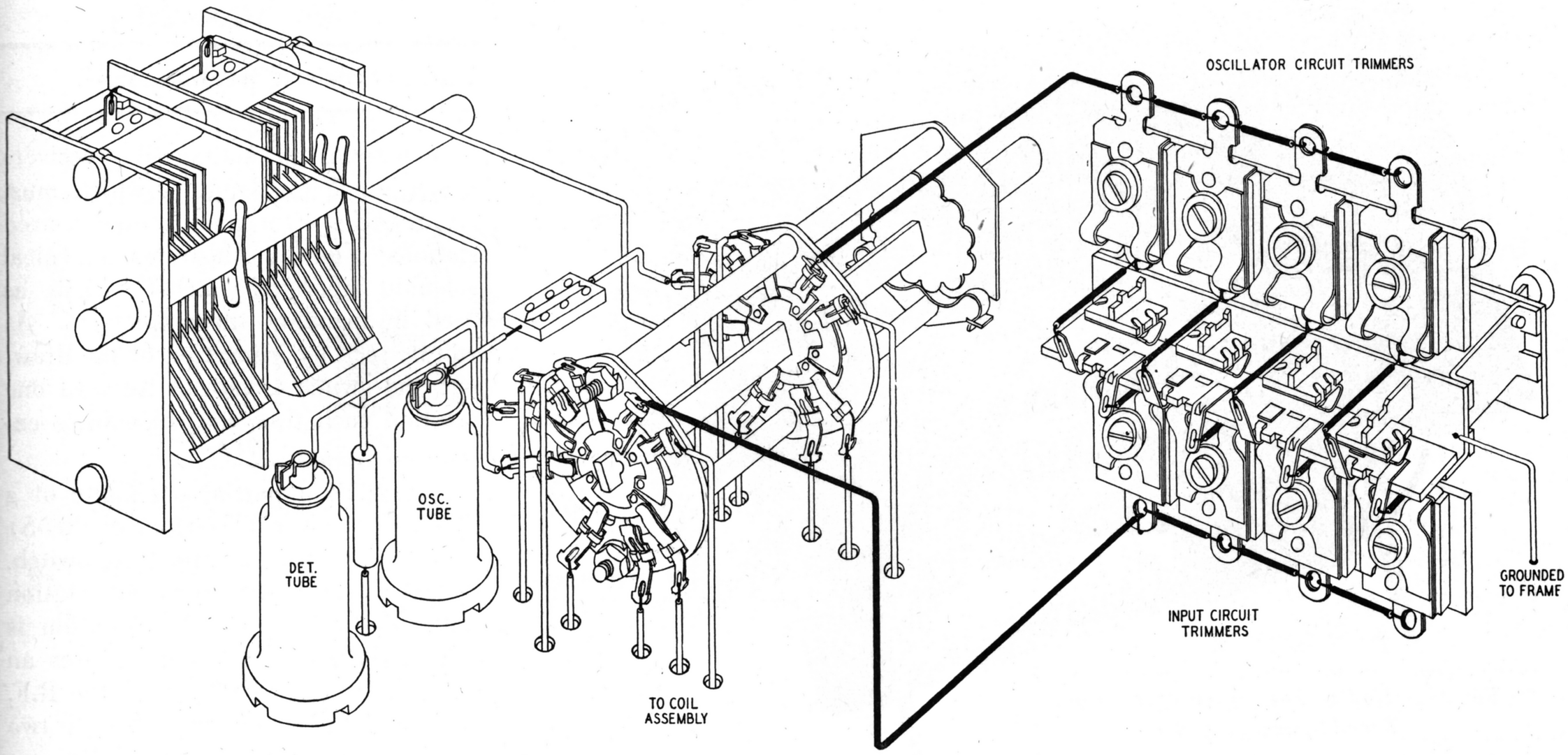

FIG. 21—*Typical Condenser Substitution Tuning System*

"E." The input coil is tracked with the oscillator by varying the position of spacing nut "E," while holding stud "F." This tracking adjustment need not be made unless you have reason to believe that the position of the nut has changed. If the cores are moved too close together, another seemingly correct adjustment may be obtained at certain frequencies. However, as soon as the adjustment stud is moved to tune a different station, the coils will be out of track. To guard against this possibility bakelite spacing sleeve "C" is placed between the cores.

Since the method of adjustment of this type tuner should be obvious in all cases, no specific instructions will be given. Those receivers which use a Colpitts oscillator circuit may show some interaction in the adjustments of the buttons. This is because the capacitance between the coil and its core is placed across one section of the tuning capacitance. The effect of one adjustment on the others will be slight, but sometimes it will be noticeable. It will be wise, therefore, to check the adjustment of each button after set-up is completed in order to be sure that the tuning has not changed.

In order to get the advantage of a tuned R. F. stage, one of several expedients may be used. Two of the

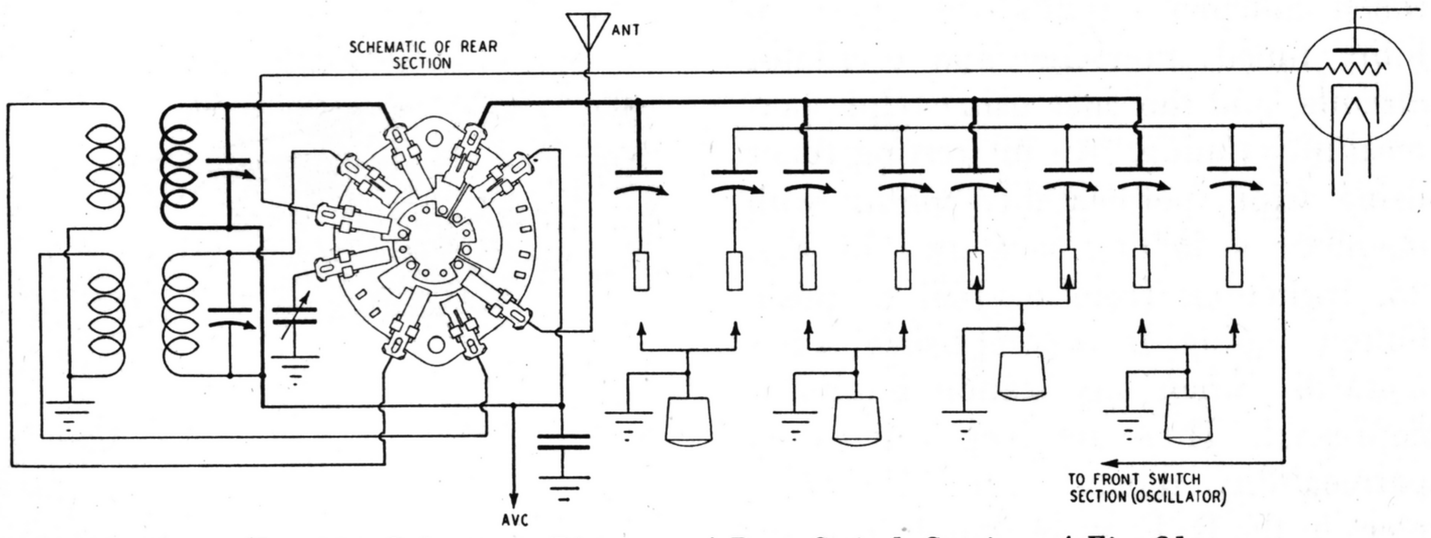

FIG. 22—*Schematic Diagram of Rear Switch Section of Fig. 21*

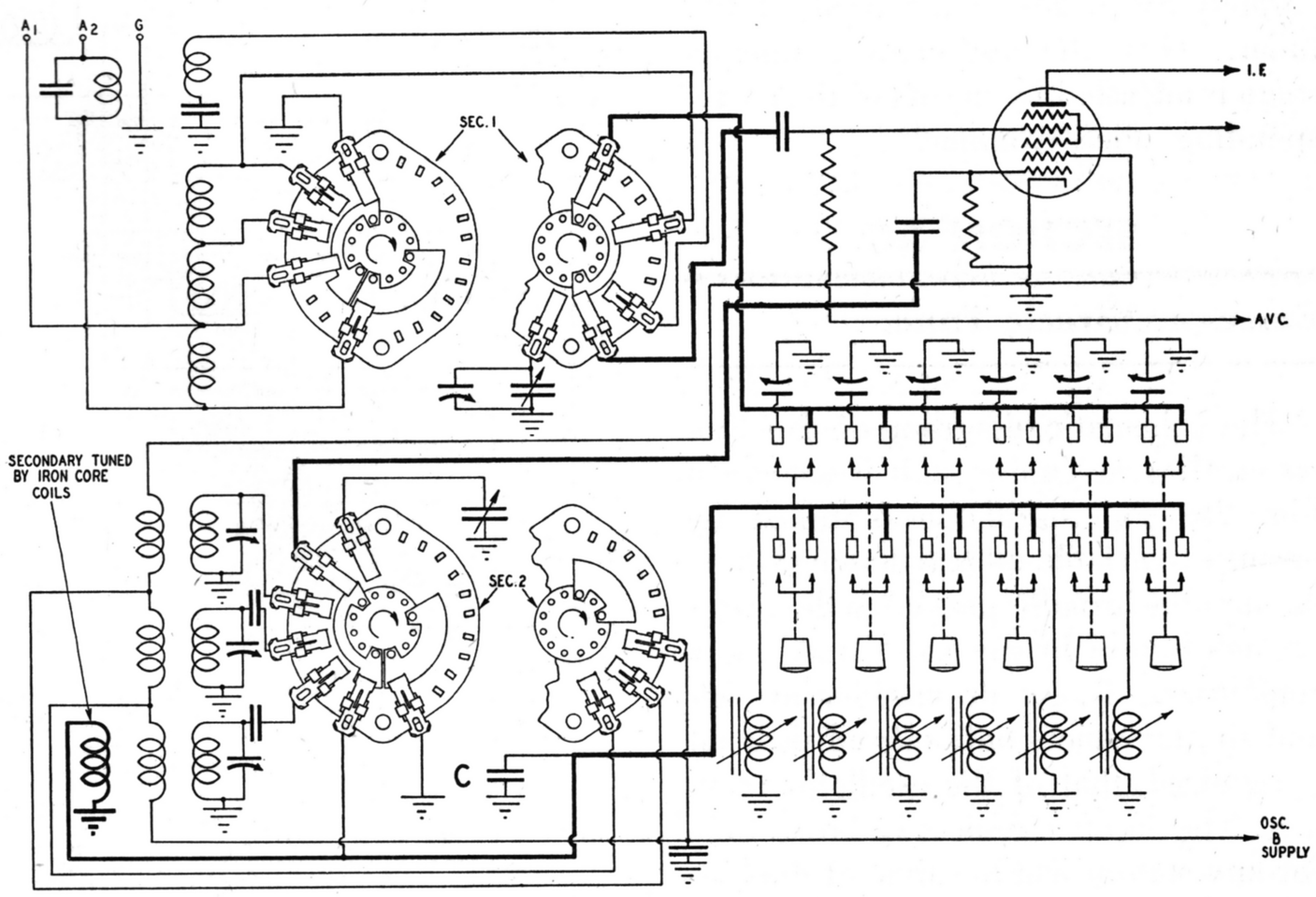

FIG. 23—*Iron Core Tuned System (R.C.A.)*

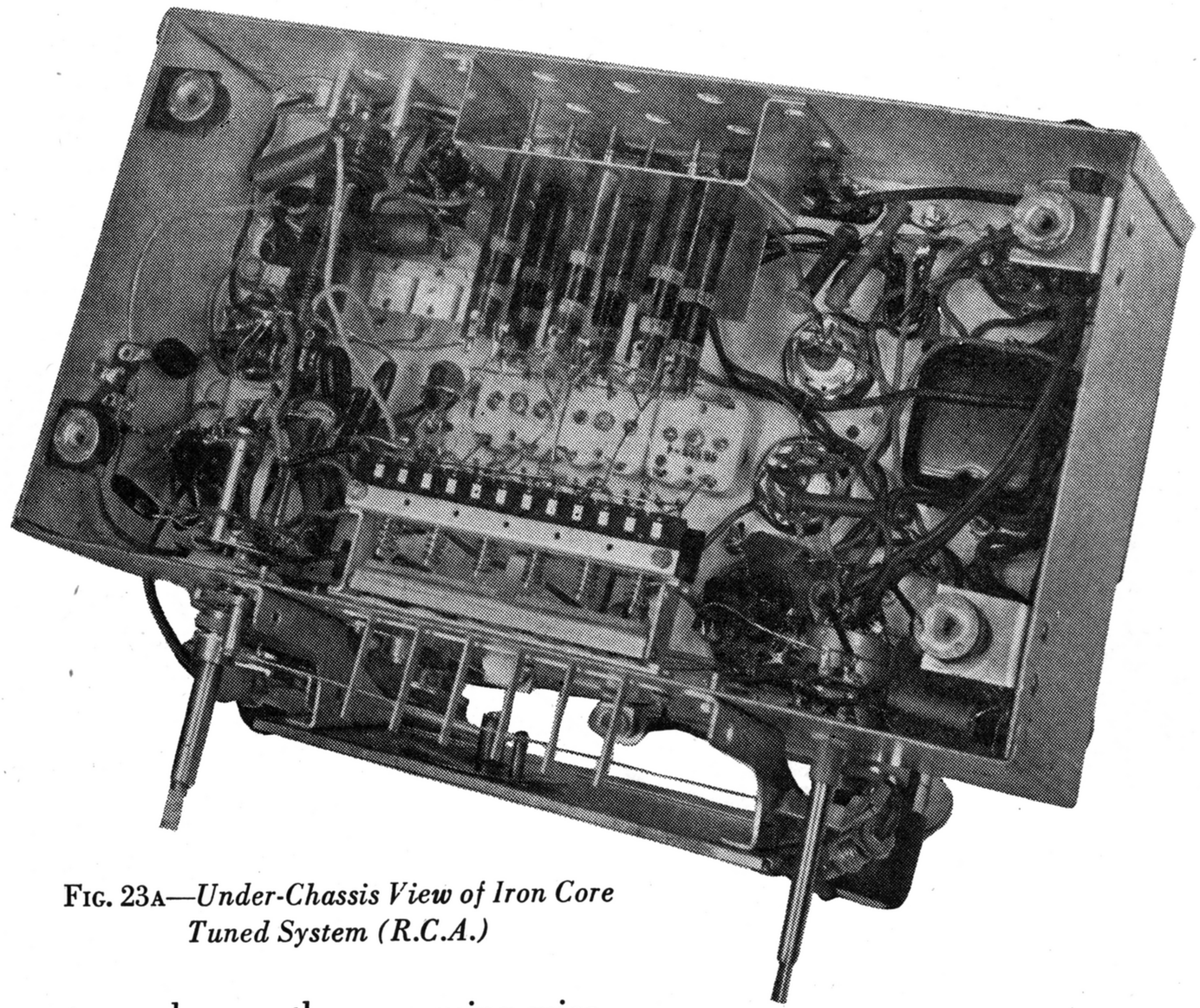

FIG. 23A—*Under-Chassis View of Iron Core Tuned System (R.C.A.)*

most popular are the ones using mica tuned antenna circuits with permeability tuned interstage and oscillator circuits, and the ones using triple permeability tuning. An interesting tuner using triple permeability tuning with magnetic switching is shown in Fig. 25. Switching from manual to push-button tuning is accomplished automatically when any station button is depressed. Those receivers using dual permeability tuners with mica trimmers in the R. F. stage require two adjustments. The station is first tuned accurately by means of the permeability tuner. Then the less critical antenna stage is adjusted by means of the corresponding mica trimmer.

SECTION 2C

Emerson Miracle Tuner

The schematic diagram of the Emerson Miracle Tuning unit is shown in Fig. 26. The oscillator is tuned by means of variable mica trimmers, while the input is broadly peaked to the range of each button by means of fixed mica condensers. To set up stations on this and similar tuners only one adjustment is required, that of the oscillator trimmer. The input circuit will be in tune for any station within range of the button.

SECTION 2D

Ratchet Switch Mechanisms

A number of automobile receivers use a single push-button, which must be pressed several times to tune desired stations. Fig. 27 illustrates a typical solenoid operated ratchet switch as used in many of these receivers. As will be seen by inspection of the drawing, the switch is moved forward one position each time the solenoid is energized.

Fig. 28 is a partial schematic of a Colonial receiver (Firestone S7407-5) showing the use of this type switch. Separate dial lights for each station light up to indicate which station is being received. This receiver uses an untuned transformer between the R.F. stage and the mixer so that only two tuning elements are required. The antenna is tuned by a set of mica trimmers, while the oscillator is adjusted by means of permeability tuned coils.

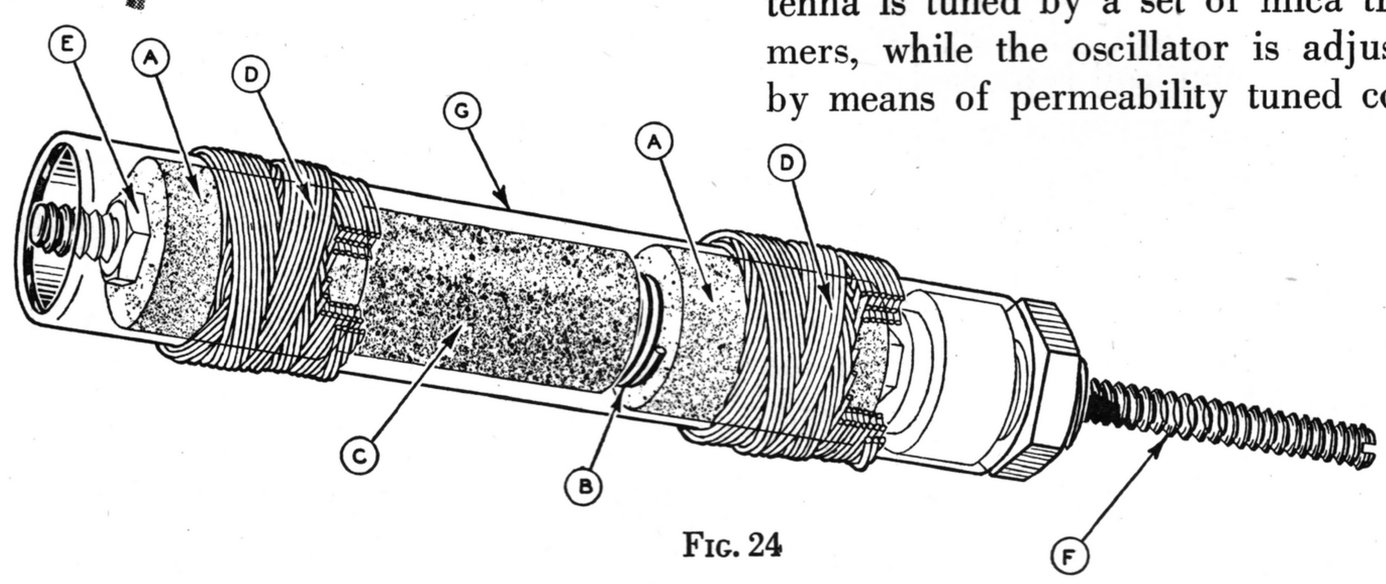

FIG. 24

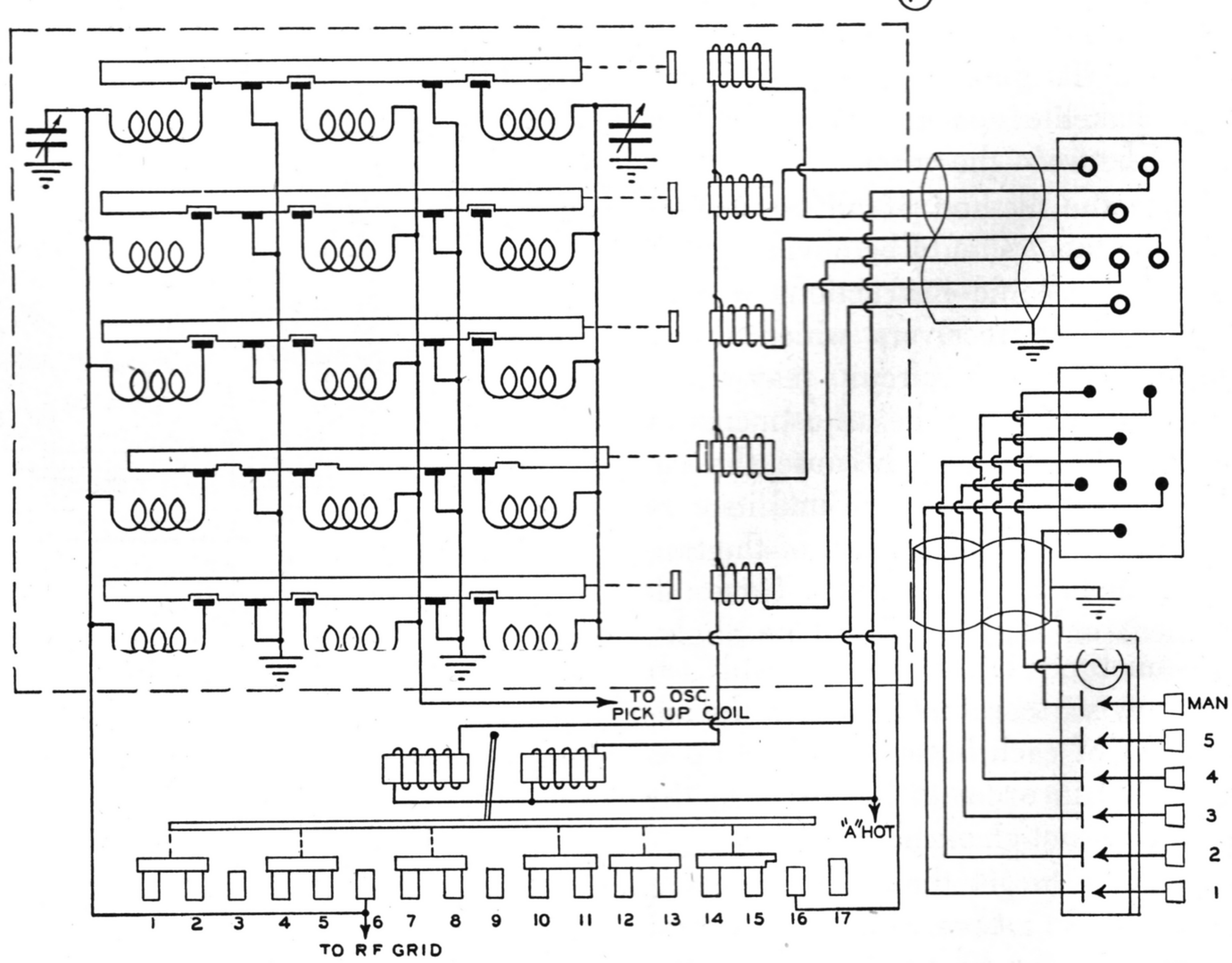

FIG. 25

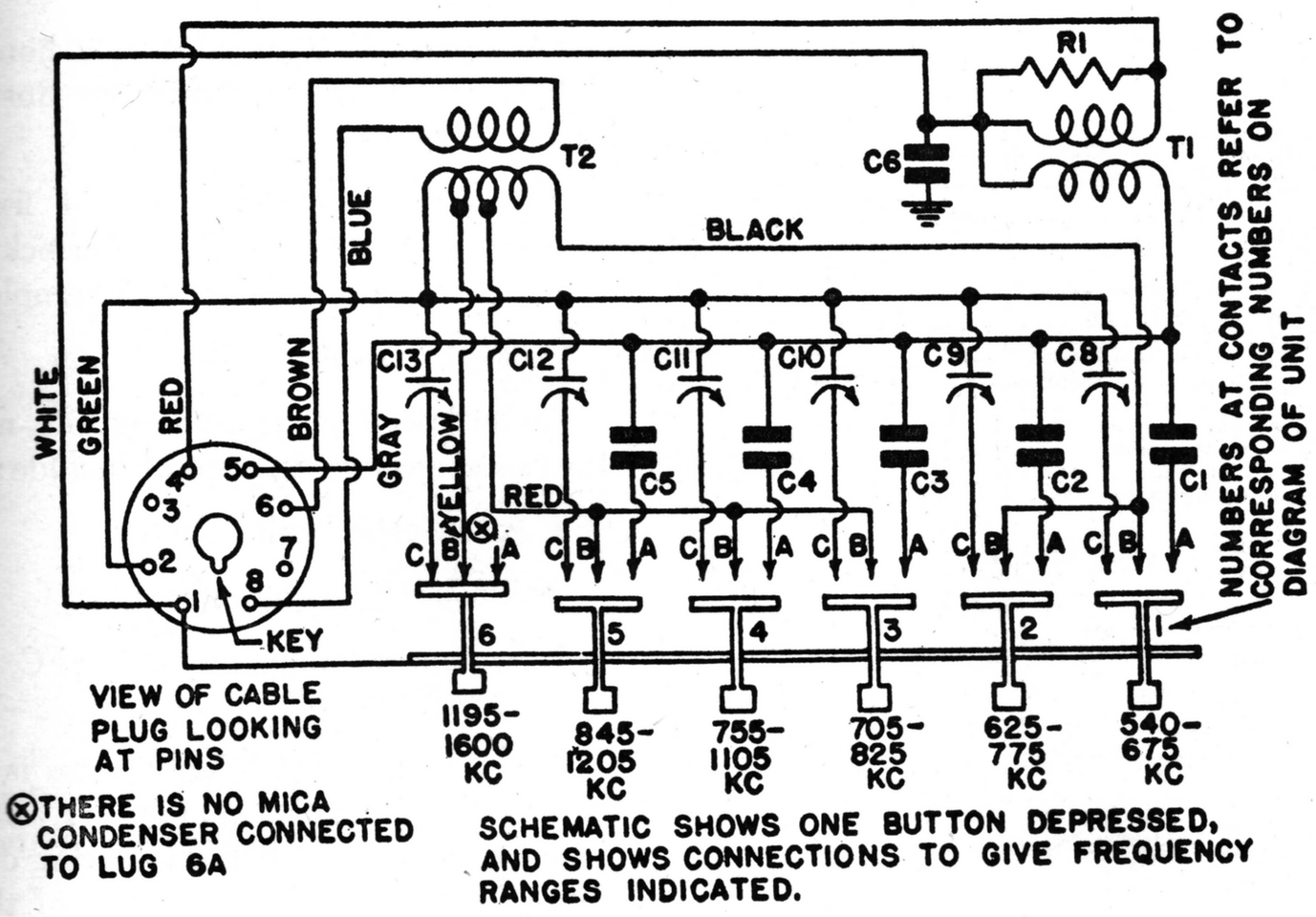

EMERSON MIRACLE TUNING UNIT

FIG. 26

Instead of the separate dial lights used as indicators in the Colonial receiver, many receivers use a rotary dial to indicate the position of the switch. This dial may be operated by the dial mechanism, as is the Motorola illustrated in Fig. 29, or it may be operated by a separate solenoid mechanism.

To set up this type tuner, first push the button until the mechanism reaches the manual position, and tune in the desired station manually. Then push the button until the desired switch position is reached and turn the oscillator adjustment corresponding to that position until the same station is tuned in. Peak the input stage trimmer for best response, and set-up for that position is completed. Repeat this same procedure for the remaining switch positions.

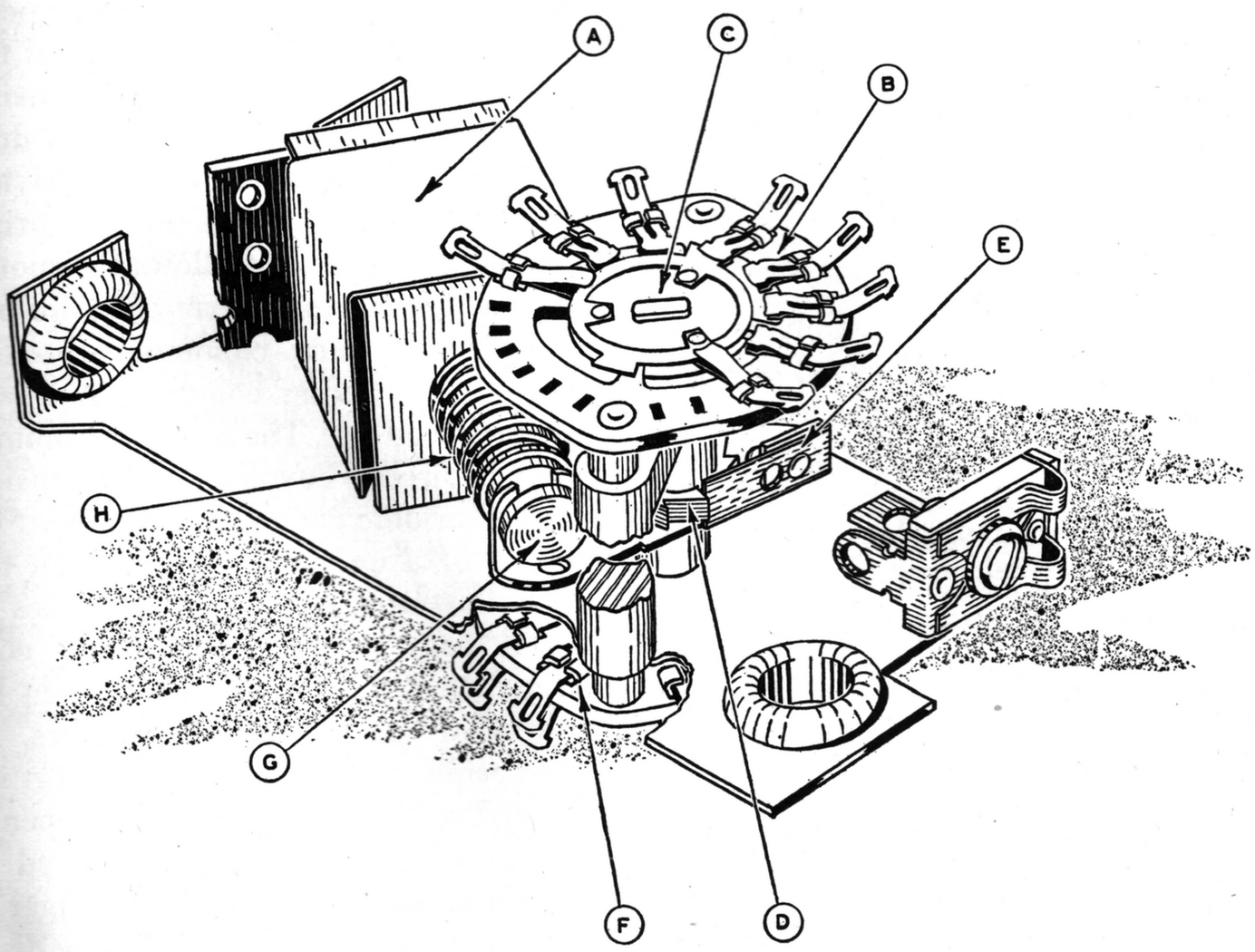

FIG. 27

SECTION 2E

Zenith Permeability and Mica

The oscillator adjustment on these receivers is the center, or screw adjustment. The input stage is controlled by the nut. Fig. 30 illustrates these adjustments and the special adjusting wrench. The button ranges are as follows:

BUTTON	RANGE
1	550 to 950 KC
2	600 to 1100 KC
3	650 to 1200 KC
4	730 to 1390 KC
5	900 to 1550 KC

SECTION 3

Motor Operated Types

The rotation of the variable gang tuning condenser to a position corresponding to a desired station tuning point is accomplished by means of an electric motor. The system usually includes: an electric tuning motor, a station selector switch or group of selector buttons, a selecting commutator or other device for stopping the motor at the desired point, an audio silencing and AFC release circuit operating during the tuning cycle and a transfer device to change from manual to automatic tune. Each of these functions will be covered more completely under individual headings. Motor tuning methods may be broadly divided into three main groups:

A—Motor drive by scanning switch.

B—Electrical push-button switch with selecting commutator.

C—Mechanically interlocked station plunger and selecting mechanism.

A. Motor Drive by Scanning Switch

A scanning or motor reversing switch is operated by a knob concentric with the manual tuning knob. The operation of the motor brings the tuning condenser position close to the desired point after which the tuning operation is completed manually. Examples: Crosley and Zenith.

B. Electrical Push-Button Switch with Selecting Commutator

The selecting commutator or stop device is mechanically connected to the

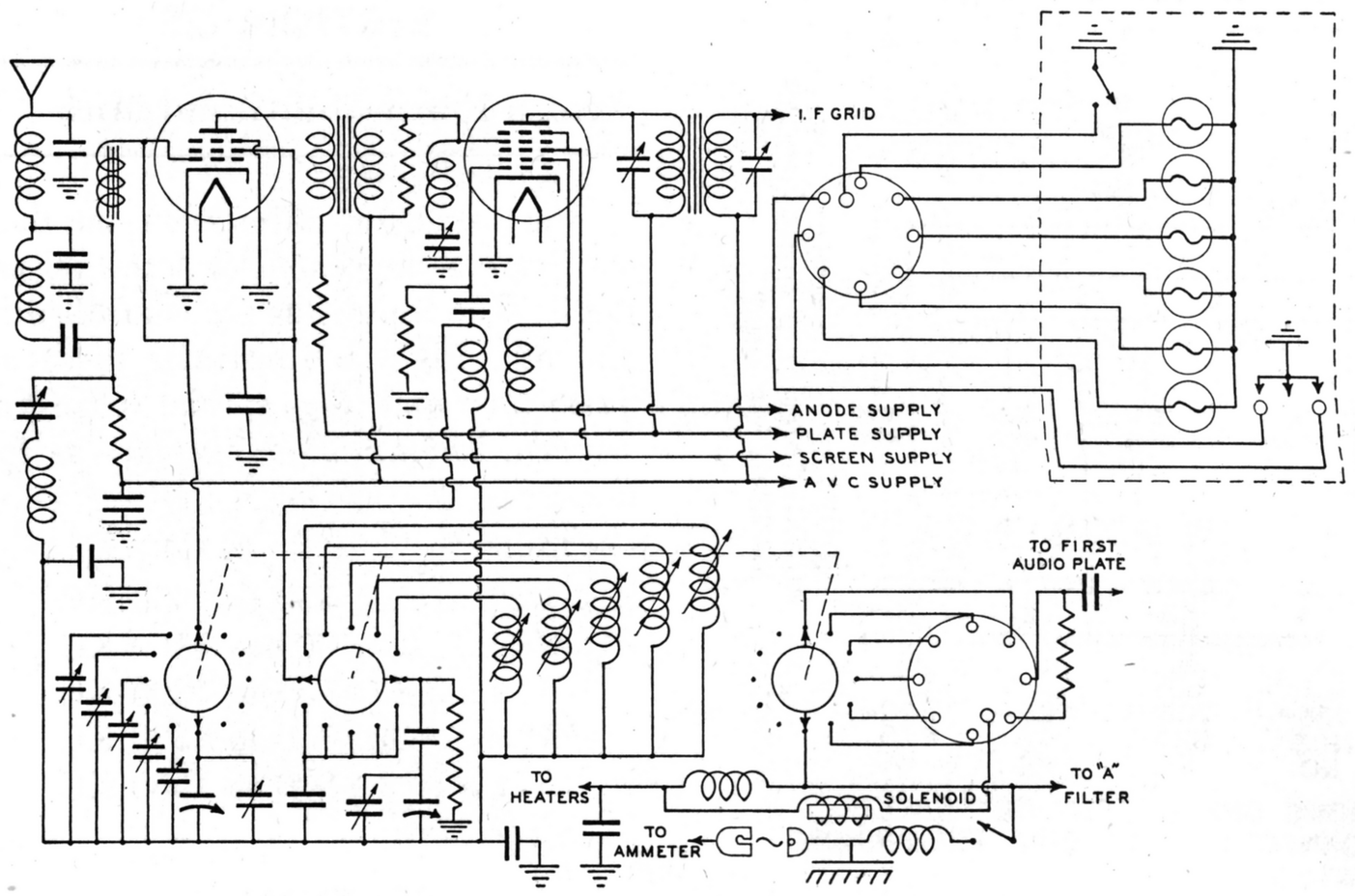

Fig. 28

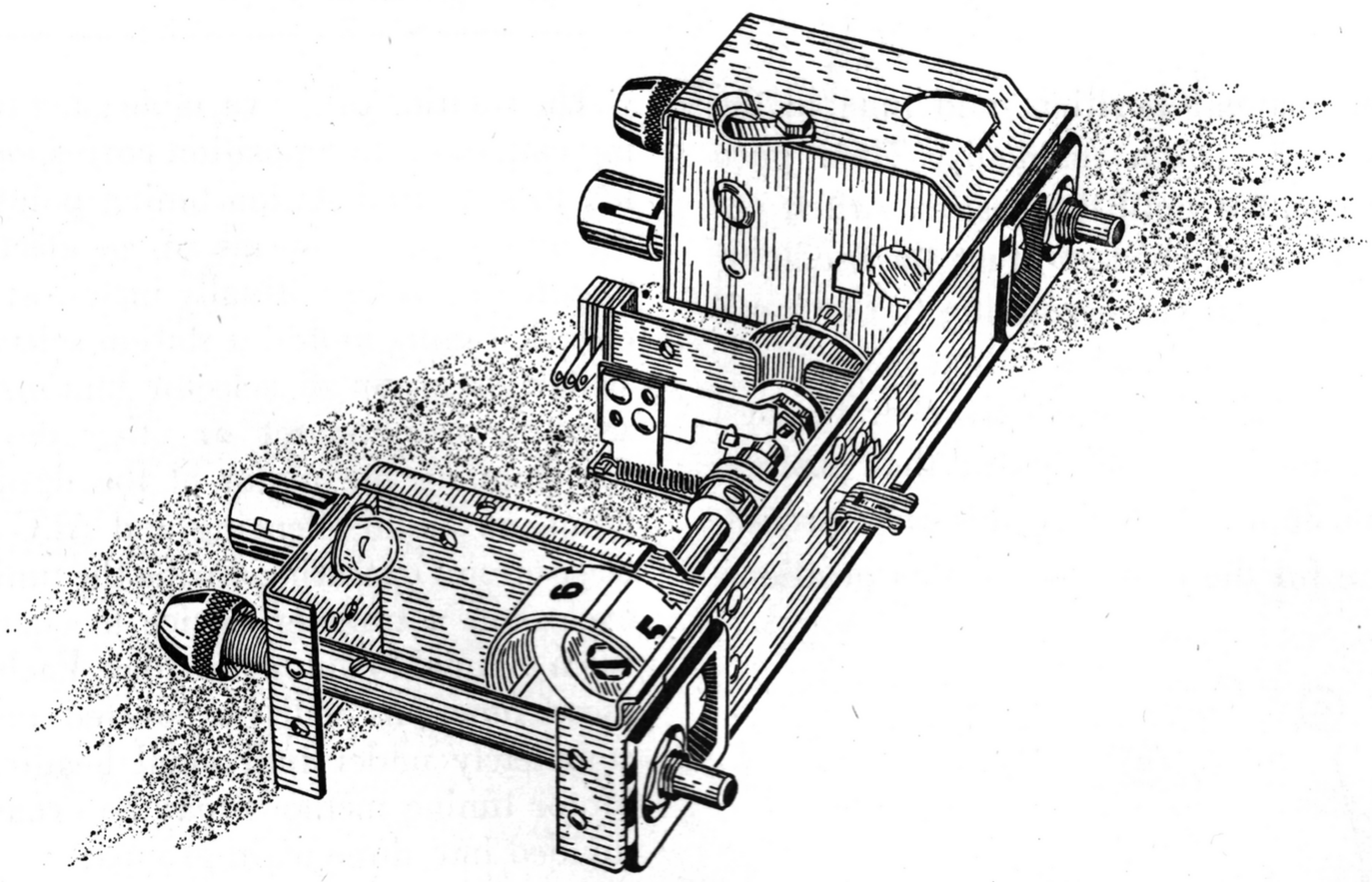

Fig. 29

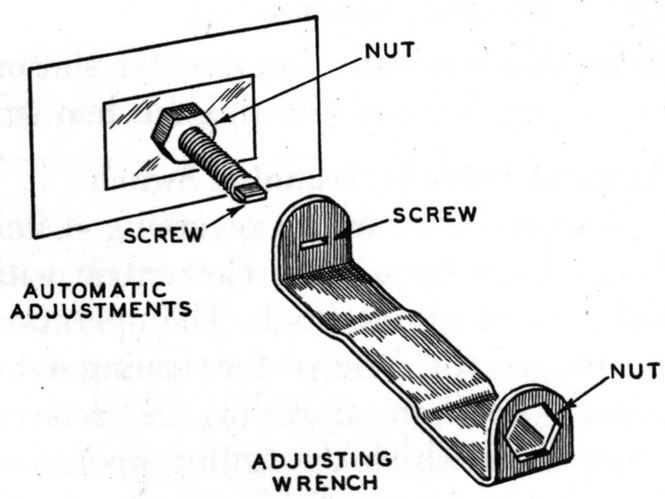

Fig. 30

gang condenser and electrically connected to the station selector switch and motor. Examples: Crosley, Detrola, General Electric, Gilfillan, Galvin (Motor car set), Midwest, Packard Bell, Pacific Radio, Radio Products, Stromberg-Carlson.

C. Mechanically Interlocked Station Plunger and Selecting Mechanism

The selecting buttons and the stop device are combined in one unit with some type of mechanical latching at the instant of stop. This type may be pre-set for stations from the front of the receiver since the stop devices are part of the dial mechanism.

1. Circular arrangement of fixed buttons which lock rotation by latching. Examples: Galvin (Motorola household sets), United American Bosch, Westinghouse.
2. Straight line arrangement of fixed buttons with mechanical interlock to disc or cam selectors. Examples: Stewart-Warner, Wells-Gardner.

As indicated in the main outline, motor tuned systems in general include:

1. An electric tuning motor.
2. A selecting commutator.
3. An audio silencing and AFC release device.

A typically motor tuned system is illustrated pictorially in Fig. 31, with its corresponding schematic wiring diagram in Fig. 32. A description of this system will serve to familiarize the reader with motor tuned operation. Variations from this typical system are covered in the notes listed in the Reference Table.

The tuning motor drives the variable gang condenser through a train of gears to which the motor is mechanically coupled by a quick-acting clutch.

When the motor is not energized the armature is positioned slightly out of the center of the magnetic field. It is held in this position by a flat phosphor-bronze spring which also acts as part of a jack spring switch assembly. When the windings of the motor are energized the rotor is drawn into the magnetic field, closing the separated parts of the clutch and actuating the jack spring switch. The clutch performs a dual function in that it relieves the driving system of the load of the motor during manual tuning and it allows the motor to coast to a stop, permitting instant cessation of gang condenser rotation when the selecting commutator opens the motor circuit. The selecting commutator is directly coupled to an extension of the variable gang condenser shaft by means of a universal coupling. In the case illustrated it consists of a series of metal discs which are electrically connected to the shaft and are driven by means of cupped friction washers. In the periphery of each disc is a short insulated section which serves to open a circuit when the disc has revolved to such a point that a contacting finger is resting upon the insulation. These discs may be rotated with respect to their

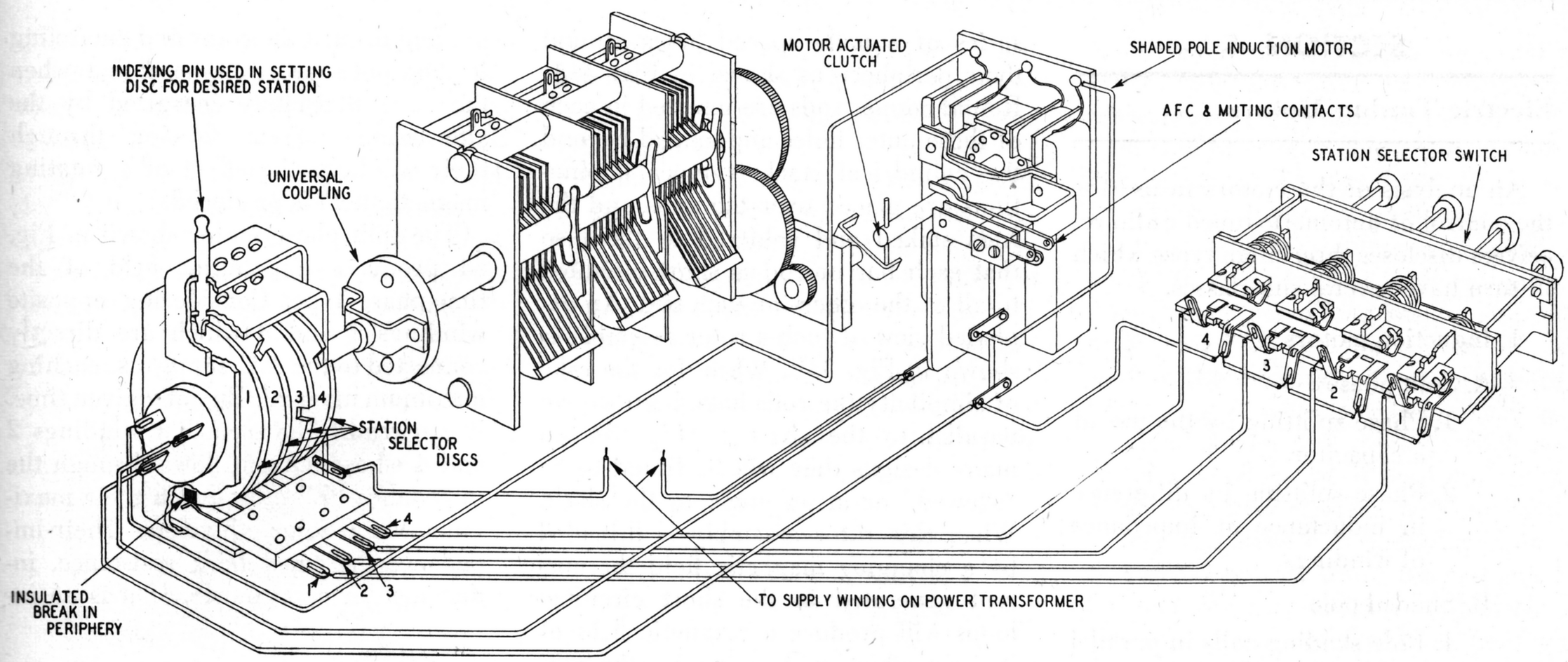

FIG. 31—*Typical Motor-Tuned Automatic Station Selector System*

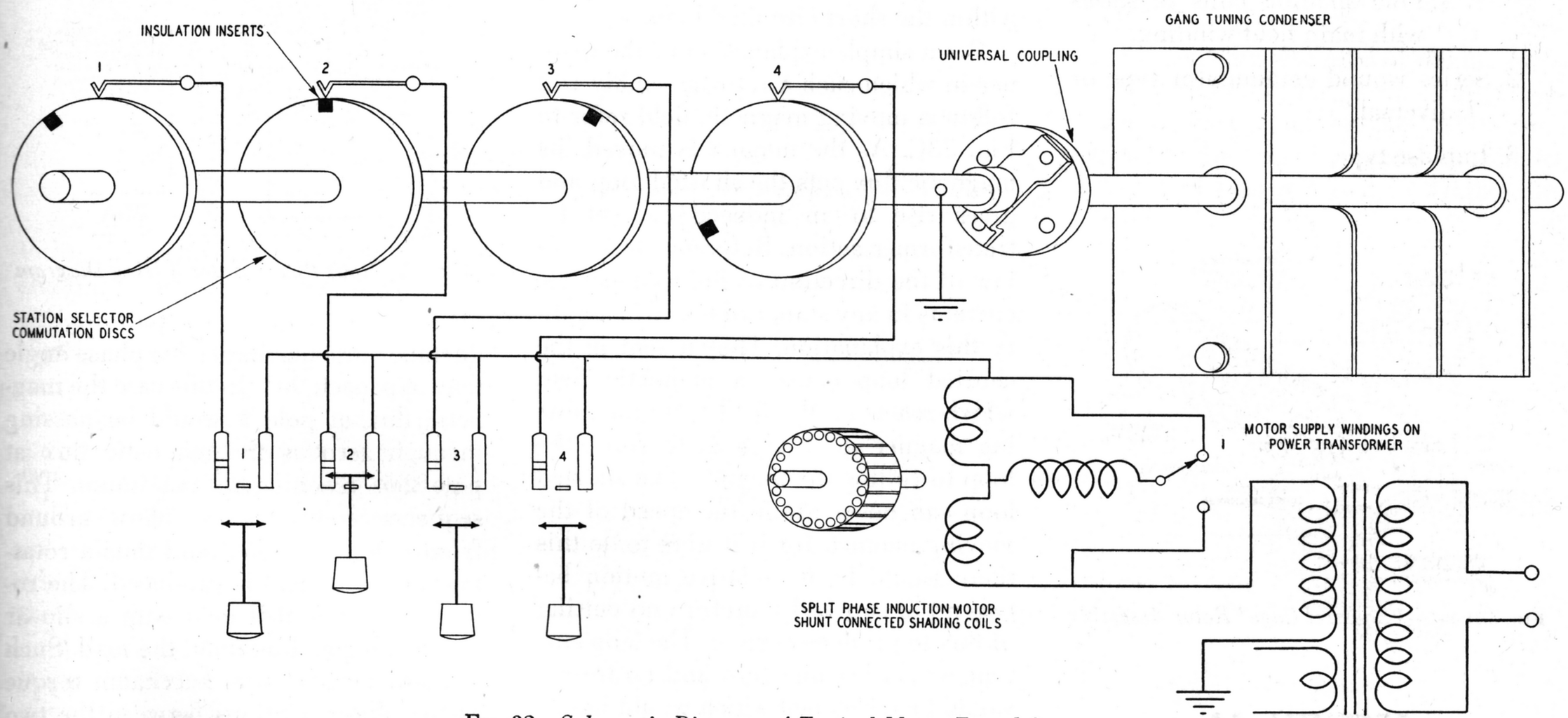

FIG. 32—*Schematic Diagram of Typical Motor-Tuned System*

drive shaft to allow them to be set to positions corresponding to desired station tuning points. This is done by locking the disc against rotation with an indexing pin while the station is tuned in manually. Since this single circuit disc cannot select the direction of rotation of the tuning motor, a motor reversing switch is attached to the commutator shaft and serves to reverse the motor at the end of gang condenser rotation in the event that the desired station tuning point has not been reached before this occurs.

Selection of the desired station is accomplished by depressing a button of the station selector switch. A single circuit switch is actuated by each button respectively wired to the contactor fingers of the station selecting commutator aforementioned. Since the push-button plungers engage a common latch bar (as described in Section 5) a circuit will be held closed until released by the choice of another button. The circuit is completed from ground through a commutator disc and its respective push-button switch, the motor, reversing switch and motor supply winding on the power transformer. Thus when a station selector button is pressed the motor will continue to run until the station selecting disc opens the circuit at the correct station tuning point. During the time that the motor is running the jack spring switch on the motor clutch has silenced the audio system of the receiver and released the automatic frequency control from operation. The necessity of these two functions will be described in greater detail in Section 7.

Several variations of this basic system exist which are not readily described in the listing. These will be described separately.

SECTION 4

Electric Tuning Motors

An analysis of the motors in use for the control of automatic tuned radio receivers discloses three main types which in turn have several sub-classes.

1. Induction motors
   - A. Split phase
     1. Phase splitting by the use of a capacitor.
     2. Phase splitting by difference in inductance or impedance of windings.
   - B. Shaded pole
     1. Pole shading coils in parallel with main field winding.
     2. Pole shading coils in series with main field winding.
2. Series wound commutator type or "Universal."
3. Impulse type.

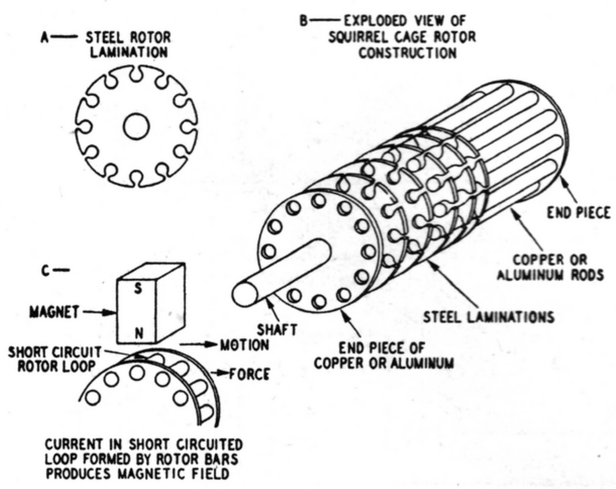

FIG. 33A-B-C—*"Squirrel Cage" Rotor Assembly*

SECTION 4A

Inductance Motors

Since induction motors use the same type of rotor assembly known as "squirrel cage" and operate by means of a rotating magnetic field, it seems advisable to start by an explanation of the manner in which a "squirrel cage" rotor follows a rotating magnetic field.

The "squirrel cage" rotor consists of a stack of round laminations stamped from thin sheets of a similar grade of iron as that found in power and audio transformers. These laminations have a central hole to fit the rotor shaft and a series of equally spaced holes around their periphery as shown in Fig. 33A. Round copper rods are inserted in each of these outer holes and extend beyond the cylindrical stack. Copper laminations are placed over the ends and the rods staked and soldered to them so that each bar or rod is short circuited to all of the others at each end. An exploded view of such a rotor assembly is shown in Fig. 33B. While for the sake of simplicity the rods have been shown parallel to the shaft in Fig. 33, in many designs they will be found to be "skewed" or at an angle to the shaft. When this rotor assembly is threaded by a changing magnetic field the current generated in the short circuited loops will produce a magnetic field of its own which will magnetize the portion of the stack of laminations lying within the short circuited loop.

For a simple explanation of the manner in which such a rotor assembly will follow a moving magnetic field refer to Fig. 33C. As the magnet is moved, its magnetic flux cuts the shorted loop and gives rise to an induced current by transformer action. Reference to Lenz's law of the direction of induced electric currents in any standard text will amplify this explanation. The current in the shorted loop causes a magnetic field which reacts on the field from the moving magnet so as to tend to force the loop to follow the magnet. The shorted loop can never attain the speed of the moving magnet, for if it were to do this there would be no relative motion between the two and therefore no cutting of flux to produce current. The loop current would become zero and no torque would be developed which would immediately result in the loop speed dropping to below that of the magnet. The velocity of rotation of the magnetic fields of all of the tuning motors in use is 3600 revolutions per minute. The speed of the rotor depends upon the load or amount of work which the magnetic field is called upon to perform and may be as high as 3000 revolutions per minute although it is usually much less than that.

In the motors under discussion, the effect of the moving magnet previously discussed is produced by the movement of magnetic flux across the pole faces of a field structure. The field consists of a stack of laminations with pole faces extending toward the rotor and encircling it. The poles are so spaced that when they are alternately energized by the alternating current flowing through their windings the effect of a rotating magnetic field is produced.

The split phase motor shown in Fig. 34 produces a rotating field of the time-phase type. Considering opposite windings 1 and 3 which are directly connected to the A.C. supply as reaching maximum magnetic flux at a given time, it can readily be seen that windings 2 and 4 whose current flows through the impedance "Z" must reach their maximum flux at some other time. Their impedance "Z" may be a resistance, inductance or capacitance. If it is an inductance or capacitance the phase angle may approach 90°. In this case the magnetic flux at pole 1 would be passing through zero as the magnetic flux at pole 2 is reaching its maximum. This sequence continues to follow around from pole 2 to pole 3 and thus a rotating magnetic field is produced. The rotor will follow this field with a slip or time lag depending upon the load. Such a motor possesses its maximum torque as the phase relations between the two field systems approaches 90°. It can be made very close to this ideal in the capacitor type motor. An example of the capacitor type motor is shown in sche-

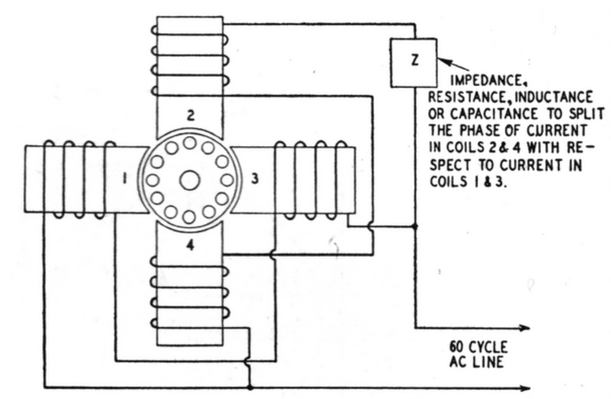

FIG. 34—*Split Phase Motor Wiring Diagram*

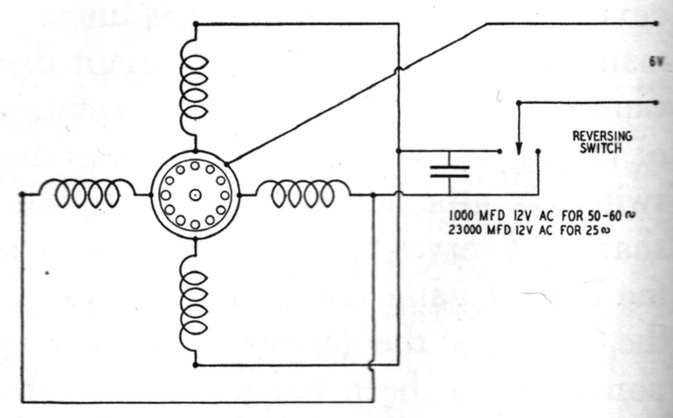

FIG. 35—*General Electric Capacitor Motor—Wiring Diagram*

matic Fig. 35 and Fig. 36. This motor manufactured by the General Electric Company is used in their "Touch Tuning" models described on page 184. Reversal of direction is obtained by shifting the phase splitting capacitor from one set of field windings to the other. Its characteristics are identical for either direction of rotation.

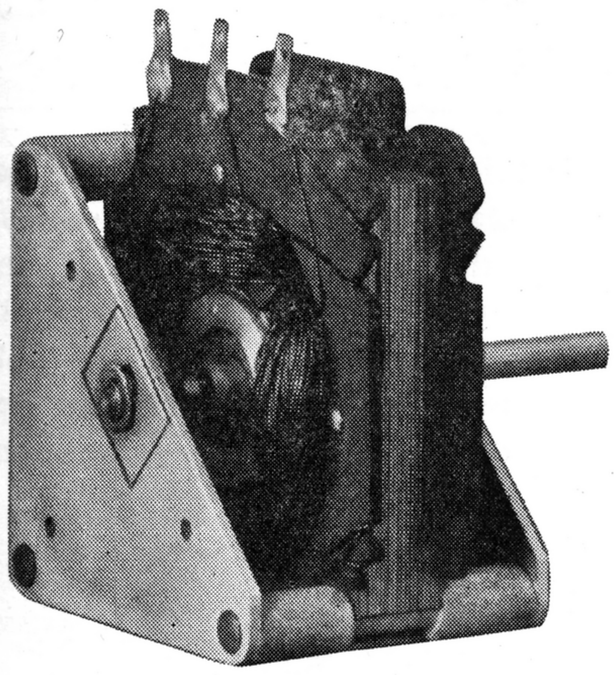

FIG. 36—*General Electric Capacitor Split-Phase Motor*

Another method of producing a rotating magnetic field is by means of pole shading. Fig. 37 illustrates this principle in diagram A. It will be seen that the tip of each field pole is notched and carries an additional winding. The windings on either pole may be alternately short circuited as in Fig. 37B. When the main field pole is building up in flux density some of the lines of force cut the shorted turns of the shading winding and cause current to flow in them. This current produces a magnetic field which tends to oppose the action of being generated and therefore does not allow the tip of the pole to become magnetized as quickly as the main pole of which it is a part. On the diminishing part of the half cycle these shorted turns are again being threaded by the collapsing flux and consequently oppose this action also with the result that the magnetism does not die out in the shaded tip at the same time that it does in the main field but lasts a short time longer. This difference in time between the main field flux and the tip causes a rotating field across the face of the pole which in turn causes the rotor to move. The direction of rotation depends upon which tip of the main field is being shaded. The direction of rotation is always from the main field pole towards the shaded portion since the flux in the shaded portion always lags the main flux. Motors produced by Alliance and Barber-Coleman are of this type.

If the pole tip windings are connected to the same source of alternating current as the field, a rotating magnetic field is produced in practically the same manner as that described for the split phase motor. In this case the phase displacement to produce the time shift of magnetic flux is due to the difference in impedance of the pole tip winding which usually is wound with a far different number of turns and hence a different inductance. The torque produced by this type of connection is greater than for the pole shading type since windings on both poles are active in producing rotation.

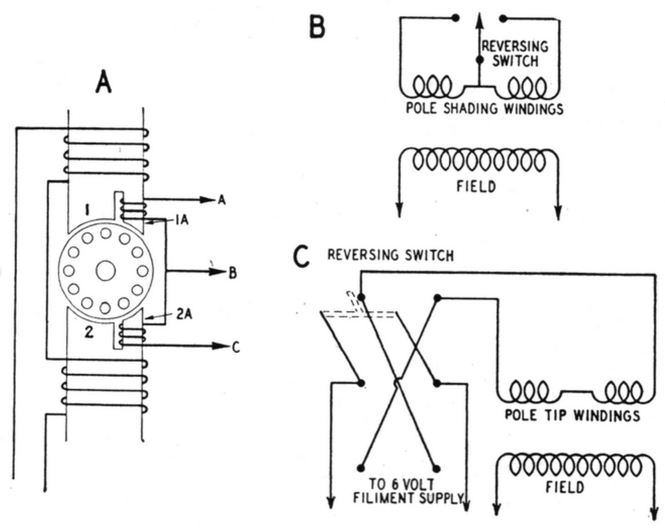

FIG. 37A-B-C—*Pole Shading Operation*

Another version of the split phase type which depends for its operation on the difference of impedance of simultaneously operating coils energizes its reactive winding by connecting it from a center tap on the field winding across either half of the field depending upon the direction of rotation desired. Examples of this type of induction motor are to be found in models offered by Delco, Robbins-Meyer and Speedway. See schematic Figs. 61, 70, and 80.

A type of shaded pole induction motor developed by the Utah Products Company is illustrated in diagram Figs. 38 and 39. This motor is furnished complete with built-in integral automatic clutch permitting instant stop of driven load when power is cut off; a built-in thermostatic cut-out switch for protection if operated continuously on overload and an AFC-muting switch operated by end thrust of the rotor shaft. Speed reduction gearing with approximately 35:1 ratio is furnished as shown in Fig. 39 so that the drive system of the receiver may operate by belt connection to the pulley shown on the large shaft with the shaft itself acting as the manual drive. In using this for manual drive the clutch is automatically disengaged relieving the load of the motor.

In this motor the wiring and placement of shaded poles makes possible reversal of direction by means of a single-pole double-throw switch. Unlike the pole shading types previously described which used only two poles with shaded

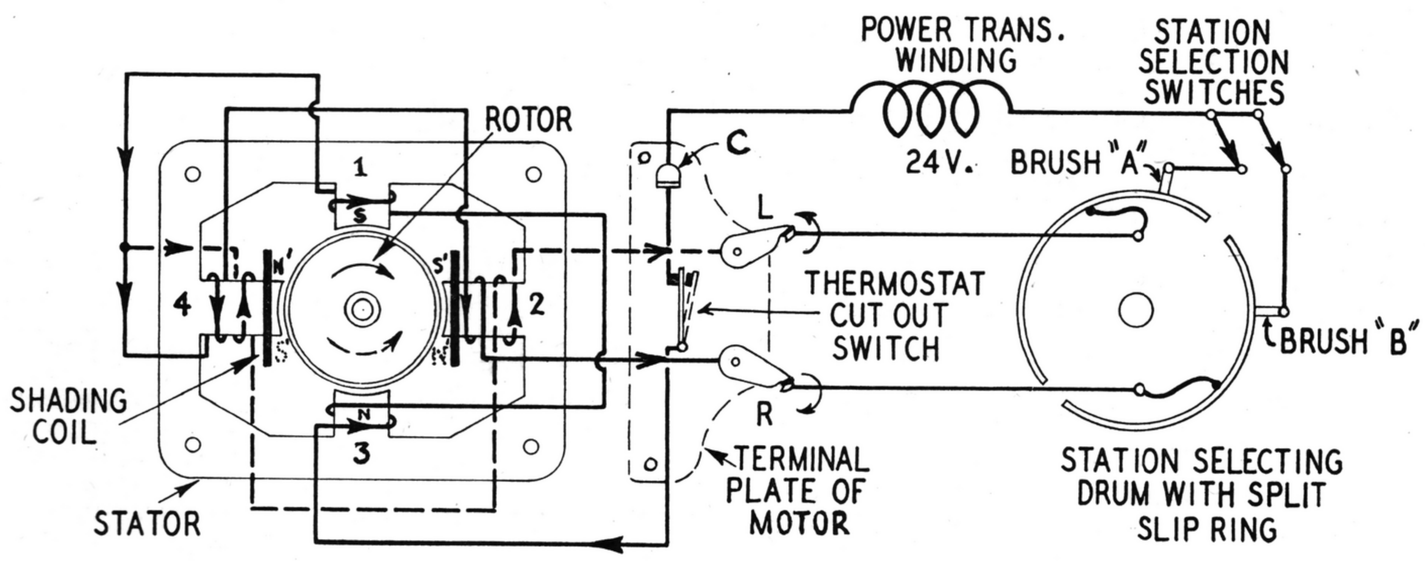

FIG. 38—*Shaded Pole Induction Motor (Utah)—Wiring Diagram*

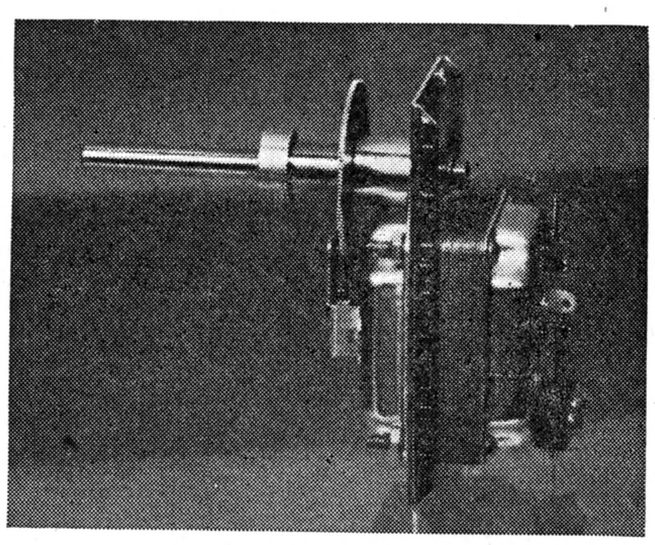

FIG. 39—*Exterior View—Utah Shaded Pole Induction Motor*

tips, this motor places the shaded sections on two additional poles midway between the unshaded sections as indicated in the figure. The pole shading is accomplished by the use of heavy copper shading "coils" which are in reality large single short circuited turns. The shading poles each have two separate sets of magnetizing coils of opposite polarity which are alternately connected with the winding on the unshaded poles by a "T" circuit. Thus either set of windings on the shaded sections may be used in series with the unshaded section.

To explain the operation of reversing this motor, assume that the external circuit is closed so as to apply current to the common terminal "C" and the directional terminal "R" (right). At a given instant assume the current to flow in the direction shown by the arrows. The current passing through coils 1 and 3 will make the corresponding unshaded pole section have polarities "S" and "N," respectively. Continuing through the windings on pole sections 2 and 4 as indicated by solid lines, magnetic polarities "S^1" and "N^1," respectively are produced, which due to the shading rings of solid copper reach maximum intensity after unshaded sections 1 and 3.

Thus the maximum flux of polarity "S" occurs first at pole section 1 and then later at pole section 2. The "N" flux simultaneously shifts from pole section 3 to 4. This causes the rotor to turn in a clockwise direction as indicated by the solid curved arrow on the rotor.

To run the motor in the other direction, the electrical connection is made to terminal "L" (left) instead of "R" (right). At a given instant, pole sections 1 and 3 will be "S" and "N" polarity as before but by following the dotted line windings now used on pole sections 2 and 3 it will be seen that their polarities are now reversed, being "N^1" and "S^1" respectively, as shown in the dotted letters. The maximum flux now shifts from pole section 1 to 4, turning the rotor counter-clockwise, as shown by the dotted curved arrow.

The motor is rated for continuous operation at 12 volts although it may be safely overloaded several hundred percent for the short intervals of time involved in tuning a radio receiver since it is protected by the thermostatic cut-out. Its performance characteristic at various percentages of rated load are shown in the graph of Fig. 40.

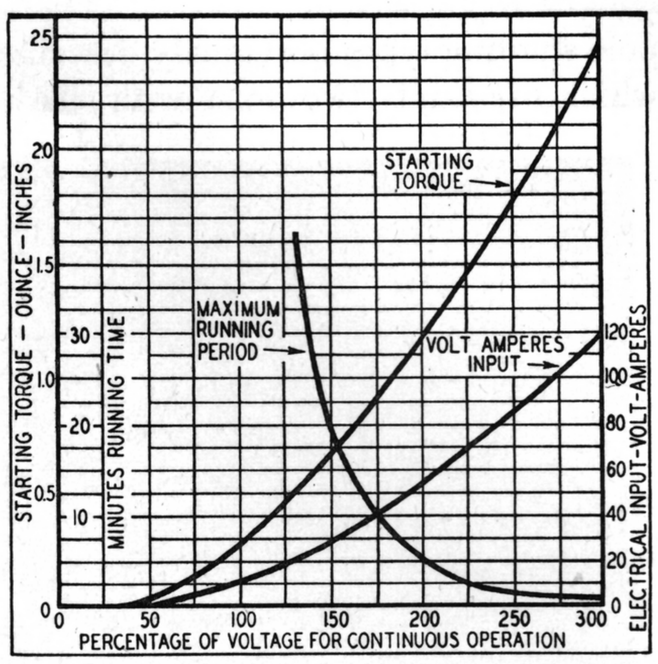

FIG. 40—*Performance Characteristics of Utah Shaded Pole Induction Motor*

SECTION 4B

Series Wound Commutator Type or "Universal"

The wound armature series connected universal motor is such a well known device as to require no detailed explanation. This type of motor ordinarily requires a double-pole double-throw switch for reversal of direction. In the types developed for the present requirements of automatic tuning a change in construction and wiring has permitted a simpler type of reversal switching. Fig. 41 shows the Delco Products 3-wire construction whose wiring diagram is shown in Fig. 42. By dividing the field winding into two parts the direction of the magnetic field of the armature with respect to the field may be reversed by the use of a single-pole double-throw switch.

This type of motor is adaptable to either the operation of A.C. household receivers or 6-volt D.C. motor car sets. Schematic diagrams of receivers employing this type of motor are shown in Fig. 20 and Fig. 76.

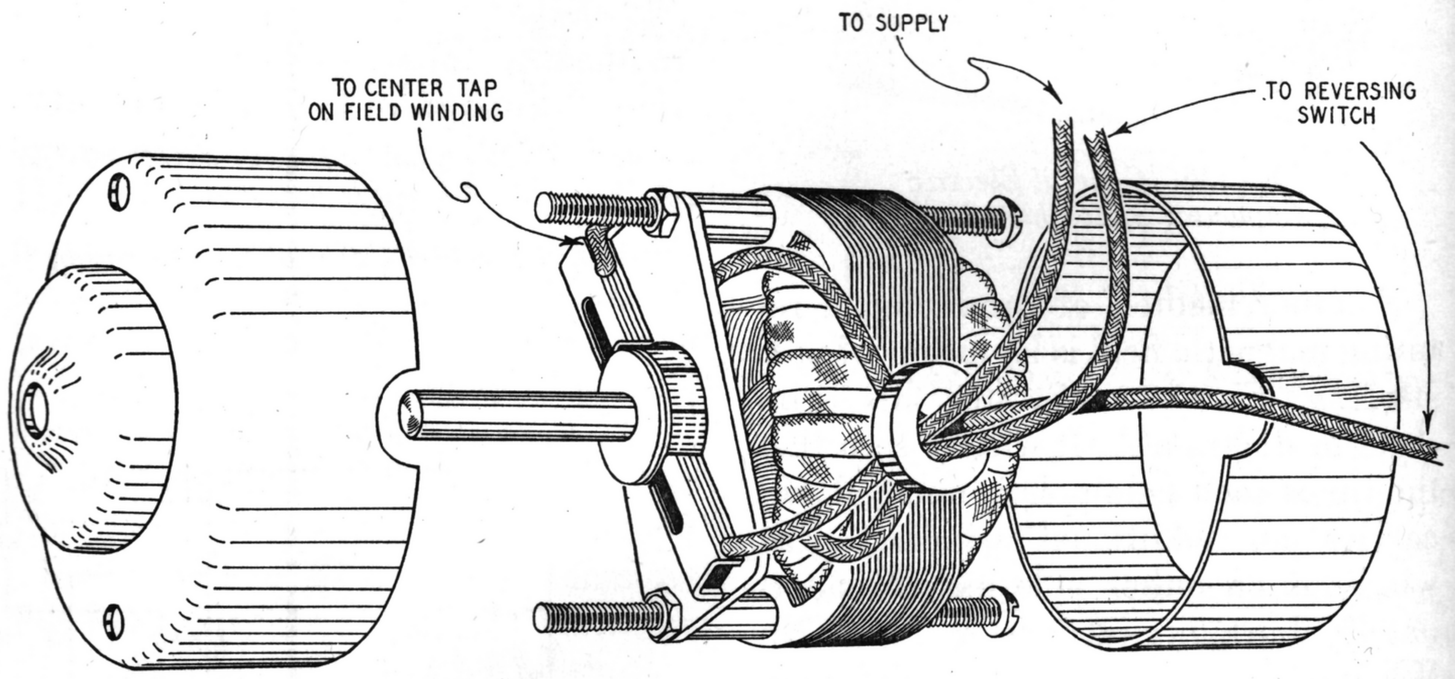

FIG. 41—*Delco Universal Tuning Motor—Assembly*

SECTION 4C

Impulse Type Motors

In this type of motor the rotation is not continuous but is intermittent as determined by a series of pulses. An electro-magnet operating on low voltage alternating current is used to obtain rectilinear motion from a hinged pole shoe normally held away from the magnet by a spring. The operation of such a motor can be understood by reference to Fig. 43, a line drawing of the Crosley "Dynatrol." On the motor shaft are two drums around which are wrapped flexible belts having cork friction surfaces cemented to that portion of the belt which surrounds the drum. One end of the belt is connected to the armature and the other end to an adjustable

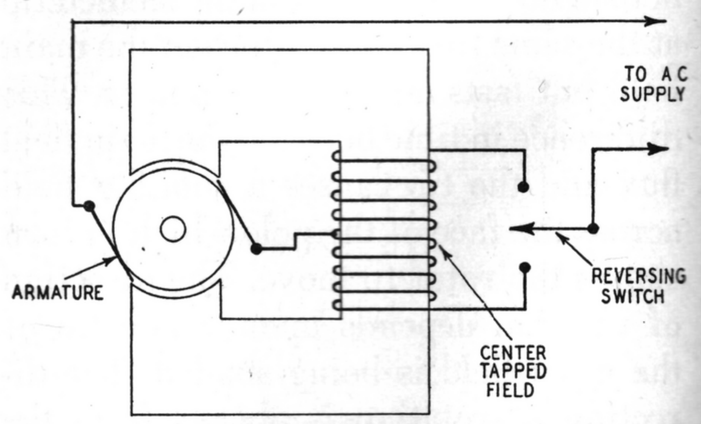

FIG. 42—*Delco Motor Wiring Diagram*

screw supported by a rubber grommet. The action of the belt in producing rotation is as follows: First, as the armature is attracted towards the magnet the belt becomes tightened and the cork friction surface wraps tightly on the smooth surface of the drum. Second, the further motion of the armature causes the belt to move a short distance until the rubber grommet and stretch of the belt prevent further motion. This slight motion advances the drum a fraction of a revolution. This entire action has occurred during the first quarter cycle of the sixty cycle alternating current. As the armature leaves the pole face under

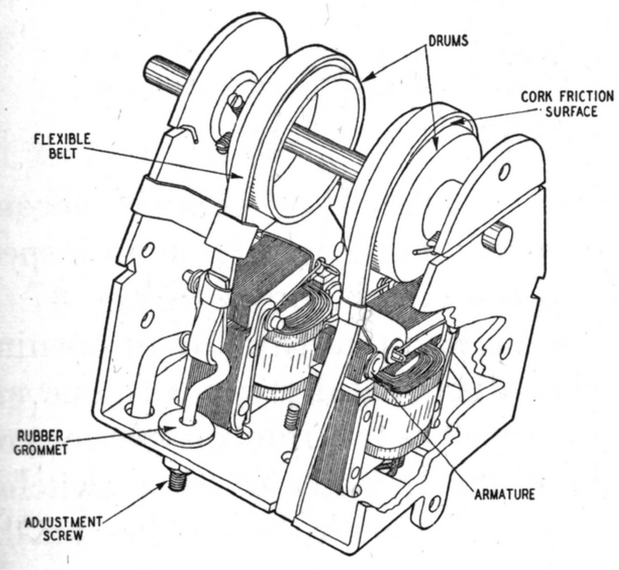

FIG. 43—*Crosley "Dynatrol" Tuning Motor*

the action of its restoring spring during the decay of voltage the relieved pressure on the belt releases the cork friction surface from the drum. The inertia of the moving drum and friction of the system prevents reverse rotation as the belt tension is released. During the second half cycle this sequence of "grab, turn, and release" is repeated and so on at a rate of one hundred and twenty times per second. In this manner due to the frequency of operation the drum appears to move continuously as long as an alternating voltage is impressed on the coil. A duplicate system is used for operation in the reverse direction. The two operate independently of one another since no friction exists between the cork surface and the drum except when the magnet is energized. Close adjustment of armature motion and tension are required. This type of motor develops a surprising amount of torque due to the short motion of each cycle of operation acting through the lever arm of the radius of the drum.

SECTION 5

Station Selector Switches

Station selection switches are used as a method of accomplishing desired station tune in all of the receivers of the tuned circuit substitution type and in all but a few of the motor operated types. In general the push-button type of switch has met with widest acceptance although a few models employ rotary selector switches of the familiar wave band type. The push-button idea has also been used in combination with the stop mechanism in a few receivers (see Notes 1C13, 1C14, and 5C).

Push-button switches may be classified into two main groups: (Momentary) in which the button does not lock down but is held down by the operator until the tuning cycle has been completed and, (Latching) in which the button locks in position and remains locked until released by the act of depressing another button.

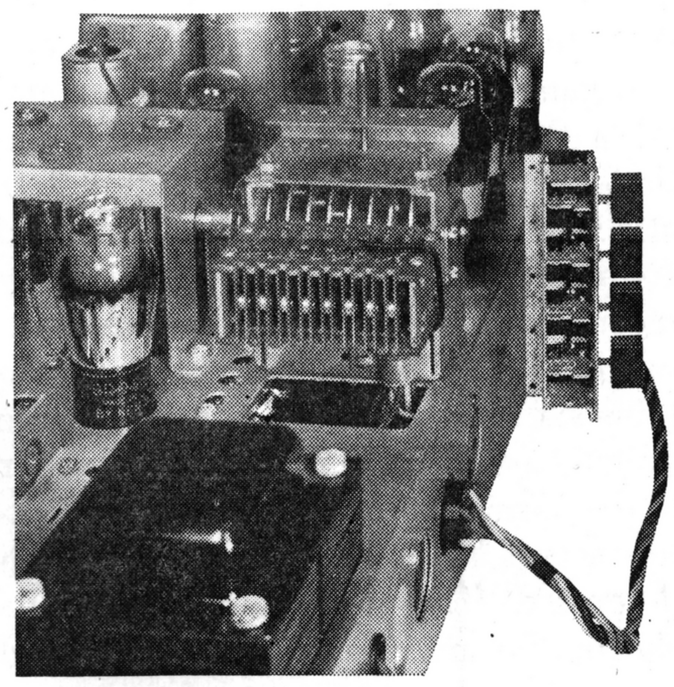

FIG. 44—*Crosley "Prestotune" Showing Station Selecting Commutator and Push-Button Switch*

Note 5A

The momentary type of push-button selector switch is employed in many receivers because of the facility with which it lends itself to remote control operation. Since buttons are not locked in place, the contacts of the remote switch may be connected in parallel with those of the switch at the receiver without any conflict of operation or the necessity of unlocking the switch at the receiver before making a remote selection. The necessity of holding the button depressed until the tuning cycle has been completed, a seeming disadvantage of this type of switching, has been rendered less objectionable by speeding up the duration of the tuning cycle to the point that action is almost instantaneous.

CROSLEY—The Crosley "Prestotune" models use two switch groups of four units each. One is shown in Fig. 44. The switch is similar in construction to that shown in Fig. 53, but with the latch bar removed to make each unit independent and non-latching.

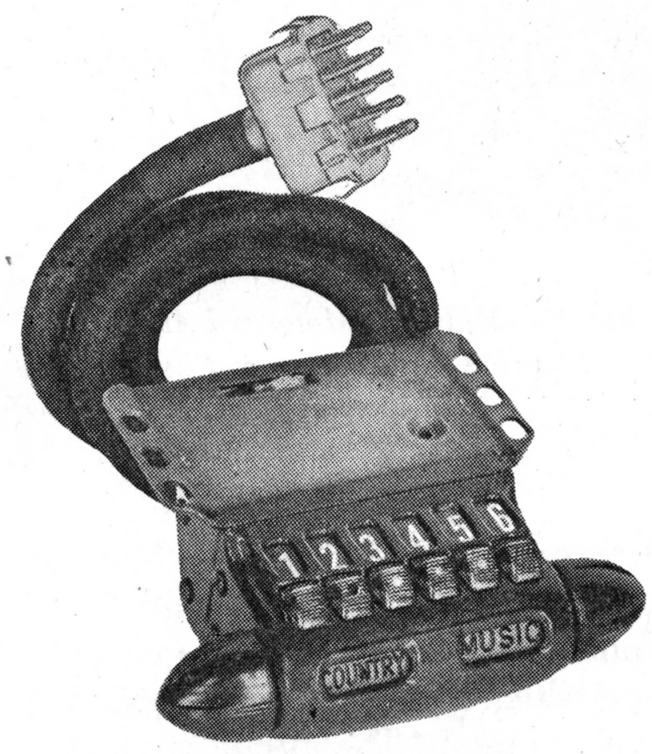

FIG. 45—*Galvin (Motorola) Combined Push-Button Switch and "Acoustinator"*

DETROLA—The Detrola "Electric Automatic Tuning" models use the momentary type single circuit push-button switch. A split ring commutation device directs the motor as covered in Section 8. Certain models have provision for remote control by parallel connection of an additional switch of the same type.

GALVIN—The "Press-Button" motor car radio control system, whose latching system was described in Note 1C15, employs a momentary type switch as an integral part of the "Acoustinator" unit. This unit may be mounted below the instrument panel or on the steering column. Illustrated in Fig. 45 is the push-button "Acoustinator" unit with its six illuminated station buttons. The unit is equipped with an extension cord to which is attached a twelve pin plug for connection to the radio receiver. The wiring of the push-button circuits is

shown in Fig. 20. Each button actuates three contacts which are connected together in the sequence described in Note 1C15. The contacts themselves are of silver riveted to phosphor-bronze springs. The motor circuit contacts are of generous size to break the current of the stalled motor (approximately 10 amperes).

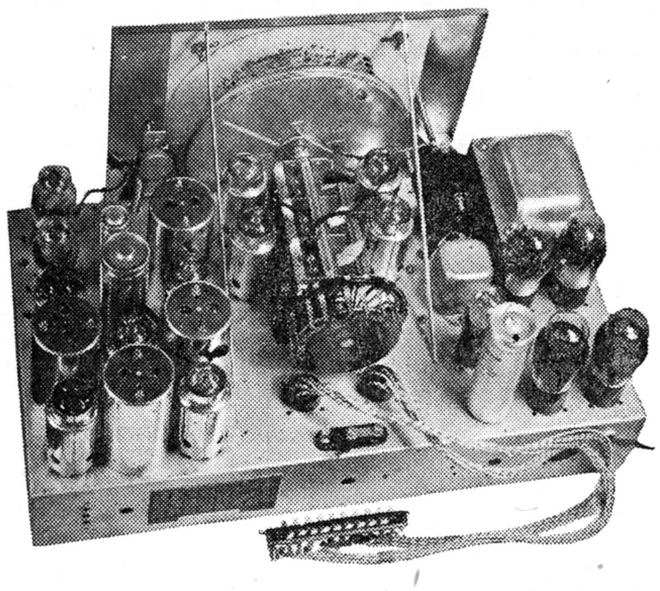

FIG. 46—*Midwest "Motorized Automatic" Showing Push-Button and Selector Commutator Details*

MIDWEST—The Midwest "Motorized Automatic" receivers are controlled by a push-button switch of the momentary type which also operates the audio silencing circuit. The circuit connections of this switch are shown in Fig. 76. The switch is mounted on the top of the cabinet and is connected to the receiver by cables and plugs as shown in Fig. 46. The momentary type push-button switch shown behind the receiver has ten buttons of which nine are used for station selection and the tenth to turn the receiver off. Pressing any station button turns the receiver on by means of an A.C. line switch mounted in such a fashion that a pin on the dial engages the actuator of the switch as the tuning motor starts rotating the dial. A "keep alive" motor transformer is connected to the A.C. line at all times and draws a small no-load exciting current. This transformer allows the push-button switch to be used for complete control since the motor is at all times ready to receive an impulse which will select a desired station and turn the receiver on in the same operation. The "off" button turns the condenser to one end, thus tripping the line switch and turning the receiver off.

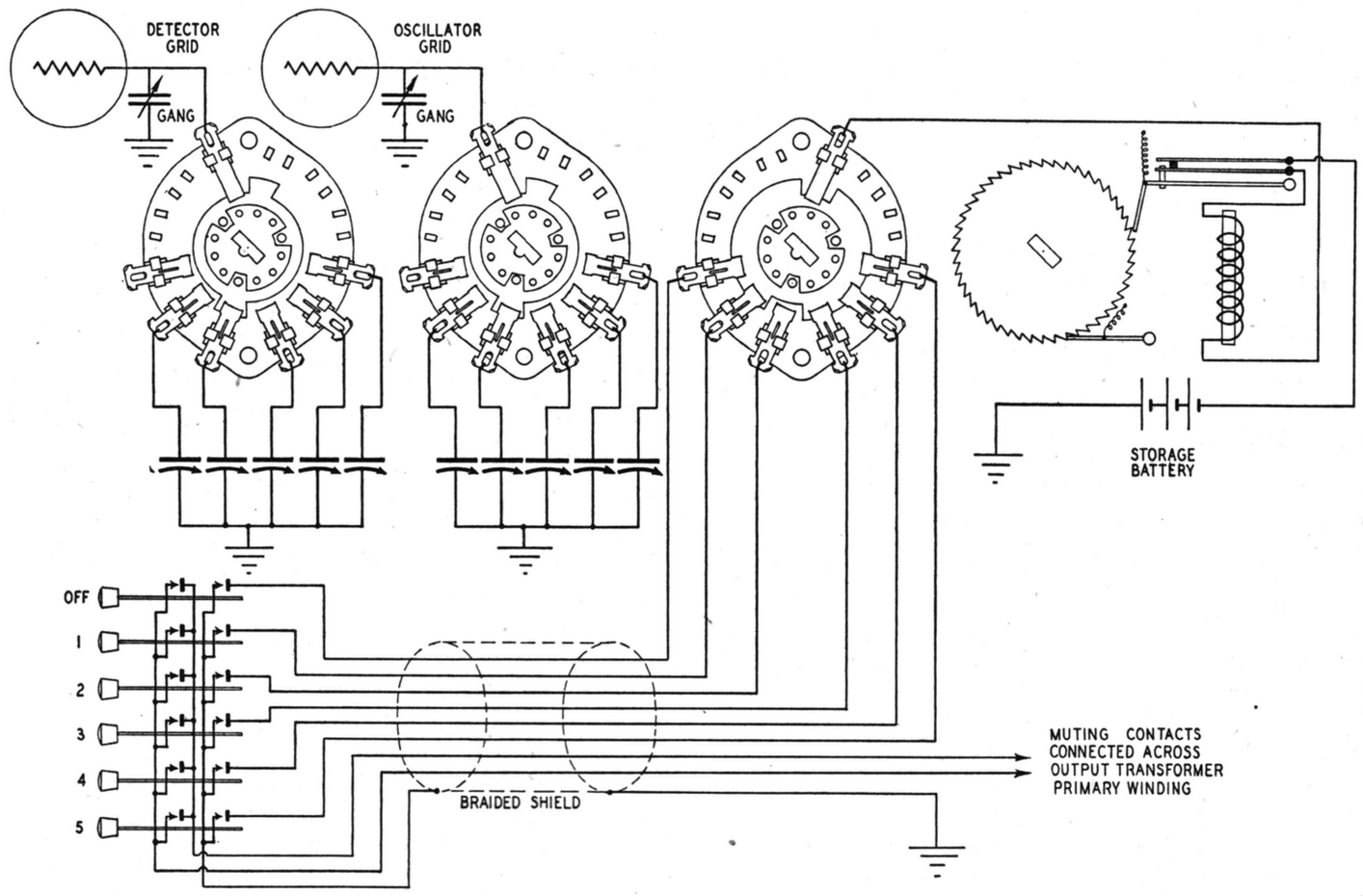

FIG. 47—*Admiral "Touch-O-Matic" Motor Car Conversion Unit—Circuit Diagram*

RADIO PRODUCTS CO.—The Admiral "Touch-O-Matic" conversion unit for motor car radio receivers employs a momentary type push-button switch in combination with a stepping system for the remote selection of tuned circuit elements. This unit shown in schematic diagram Fig. 47 may be attached to any two gang motor car radio receiver and allow the selection of five favorite stations by means of a push-button box attached to the steering column and connected to the unit at the receiver by means of a shielded cable. The push-button box as shown in the diagram contains six switch units. The first of these units is used for the purpose of transfer to the normal manual control. Each button serves to close two circuits when depressed. The first of these circuits shorts the moving coil of the loud speaker or the output transformer primary winding thus silencing the receiver during the tuning cycle. The second switch selects a circuit for one of the desired station selections. The operation of the conversion unit follows: A multi-section wave change switch is rotated by a stepping device in which a toothed wheel is advanced by a magnetic armature with breaker points similar in action to an electric door bell. As long as the circuit is complete through this device it will continue to vibrate and move the toothed wheel one notch or tooth at each vibration. The first section of the switch is used to stop this motion at the desired points. How this is accomplished will be obvious from an inspection of the circuit shown in Fig. 47. It will be noticed that two circuit opening notches diametrically opposite one another as well as two rotor projections on each of the trimmer selector switches corresponding with the notches on the circuit opening section make it unnecessary for the rotor to revolve more than one hundred and eighty degrees to select any station. The two trimmer selector switches are connected in parallel with the oscillator and input sections of the gang condenser respectively. The gang condenser is turned to its minimum stop when using the automatic station buttons. Thus the "off" button accomplishes transfer by opening these two circuits.

STROMBERG-CARLSON—The 70 series "Te-Lek-Tor" remote control "key" box contains twenty momentary type push buttons for complete control of the receiver. In addition to the selection of eight preset stations, the unit has push-button control of on and off functions, the increase or decrease of volume, scanning or continuous tune to higher or lower channels, automatic operation of the automatic record-playing phonograph and selection of four speakers. These operations are accomplished by the use of separate motors for the tuning and volume control operations and relays for the control of off-on and radio-to-phonograph switching.

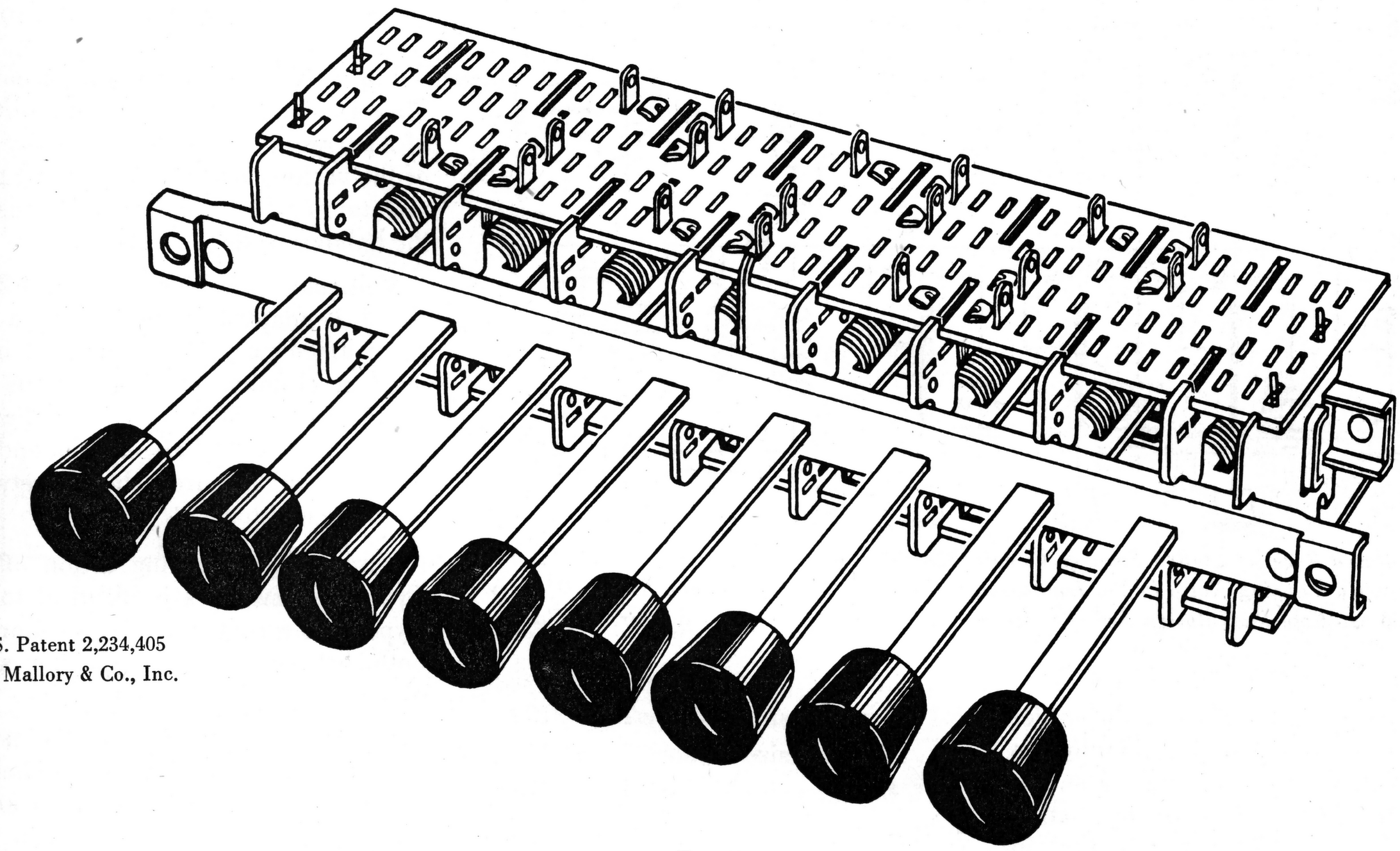

U. S. Patent 2,234,405
P. R. Mallory & Co., Inc.

FIG. 48

Note 5B

Under this note are classified all of the latching or ladder type push-button switches. In general, this type of switch can perform all the functions of a rotary switch, with one important additional advantage—switching can be accomplished in any desired sequence. Fig. 48 shows the front view of a Mallory MC manufacturers original equipment type, or 2100 jobber type switch. MC switches can be built with a maximum of 32 terminals per plunger, to perform such applications as circuit closing, circuit opening, and circuit transfer, with either shorting (make before break) or non-shorting (break before make) operation, both between terminals, and between successively operated plungers.

Fig. 49 illustrates the simplest contact action—namely, depressing a button closes one or more individual circuits. The practical application of this is shown in Fig. 50 where the circuit closing principle has been applied to push-button tuning.

The shorting, or make-before-break sequence is always used for push-button tuning. A break-before-make or non-shorting action would be undesirable in this type of circuit, since momentarily opening the grid circuit would result in a voltage surge and would cause a loud thumping noise in the loud speaker.

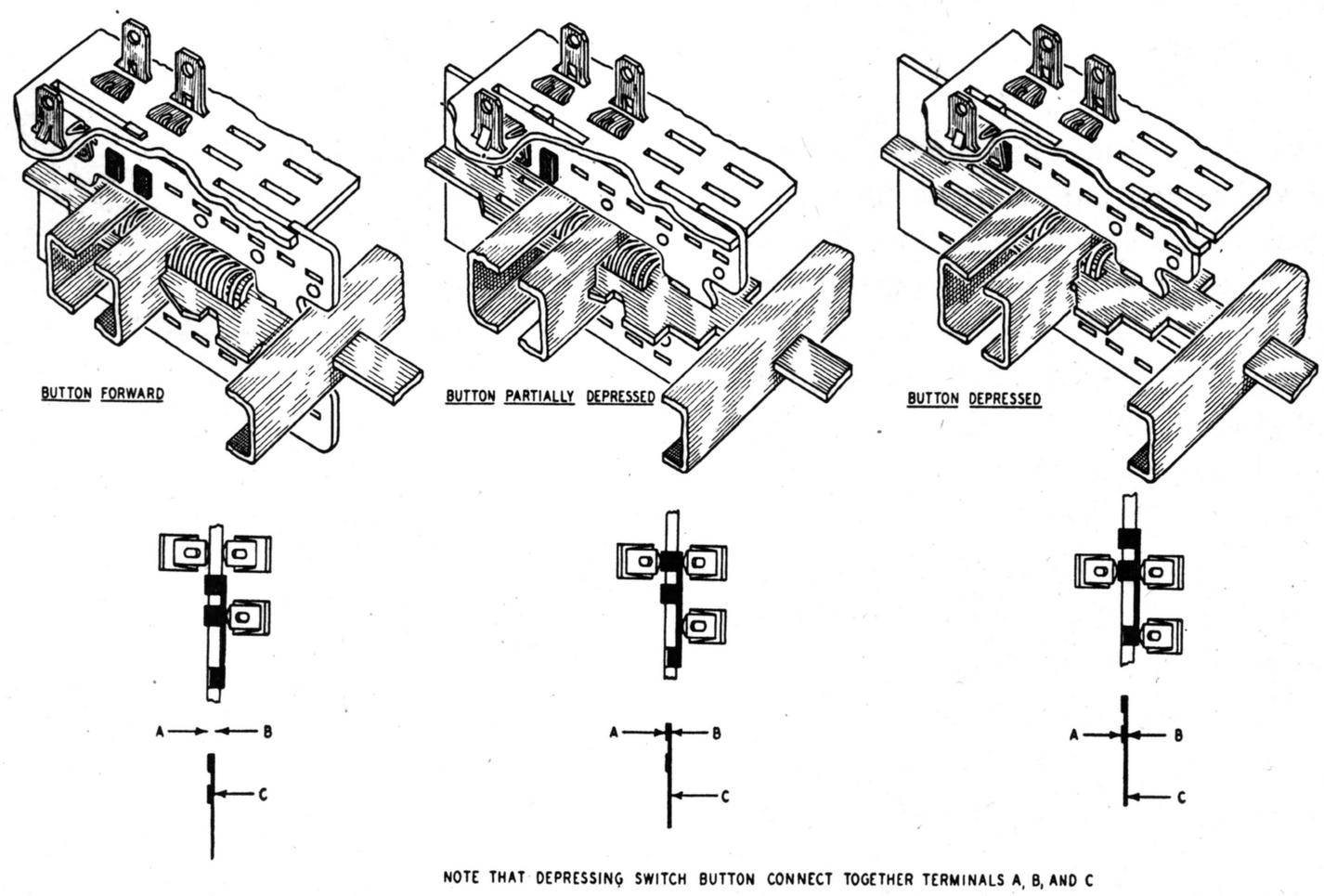

FIG. 49—*Switch Action—Depressing Knob Connects Together Three Contacts on Each of the Independent (Upper and Lower) Switch Sections*

TYPICAL APPLICATION

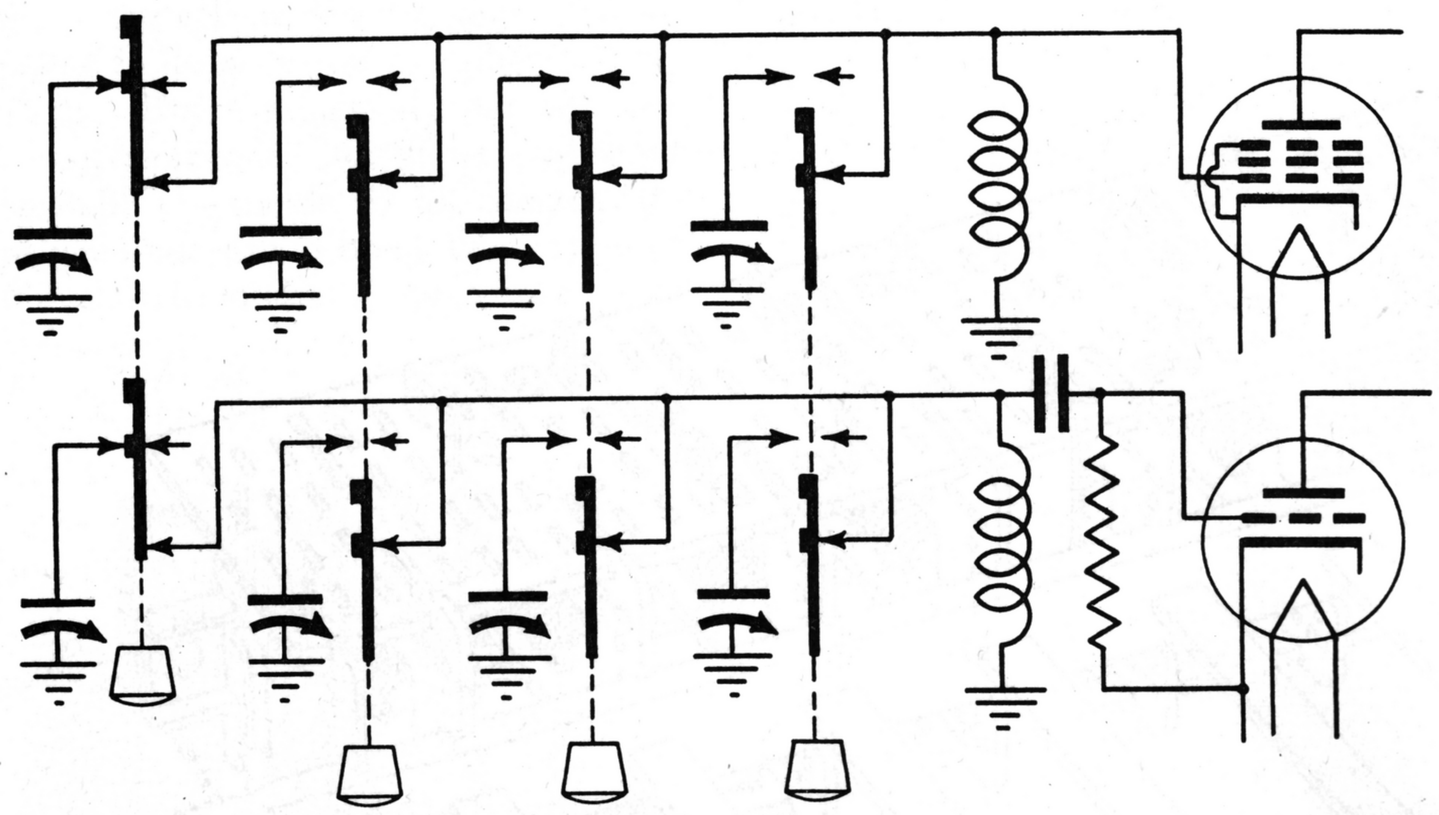

FIG. 50—*Radio Receiver Station Selector Circuit. Shorting (make-before-break) Action Insures Quietness—No Popping Noise in the Loudspeaker from the Operation of the Switch. Mallory Type 2160 Multiple Push-Button Switches Have Many Other Applications for Circuit Closing.*

An interesting sidelight on the ladder switch is its application to radio test equipment. By building such a switch with a definite non-shorting action (break-before-make) these switches can be used for ammeter of milliammeter insertion, or for voltmeter switching, and when so used provide greater convenience than can be obtained from rotary switches in that measurements can be made in any desired order, without the necessity of connecting the meters to circuits where readings are not desired, as would occur when turning a rotary switch, from one position to another.

Fig. 53A shows the contact action of an MC switch built for non-shorting, or break-before-make operation. Fig. 53B shows a typical application in test equipment.

Note: Standard stock types of MC switches may be purchased for constructional purposes. These stock types are available as follows:

(a) Circuit closing—shorting action. Depressing button connects together two independent groups of three terminals.

4 button size Mallory Type 2164
6 button size Mallory Type 2166
8 button size Mallory Type 2168

(b) Circuit transfer, shorting type. Depressing button transfers two circuits, viz. double pole, double throw.

4 button size Mallory Type 2184
6 button size Mallory Type 2186
8 button size Mallory Type 2188

(c) Circuit transfer, non-shorting type, same as 2160 series, except that a definite break-before-make operation is provided. For test equipment applications:

4 button size Mallory Type 2194
6 button size Mallory Type 2196
8 button size Mallory Type 2198

Fig. 53B. Meter Switching Circuit—This circuit permits the instant insertion of a current reading meter into any one of the various circuits, at the same time maintaining "through" connections on the balance of the circuits.

Voltmeter Switching—The Type 2190 switch is adapted for connecting a single voltmeter across a number of independent circuits. The connections are similar to Fig. 53B except that the terminals marked "A" are unused, and the interconnecting wires shown between them are omitted.

NOTE: The switching action of the Type 2190 switches is identical to the Type 2180 except that it is non-shorting both between contacts on the same plunger and other plungers.

Several of the tuned circuit substitution type receivers employ a switch in which the trimmer condensers are an integral part of the switch design. The switch structure is arranged to provide shielding between the circuits. An example of the use of such a switch is that employed in the Sparton "Selectronne,"

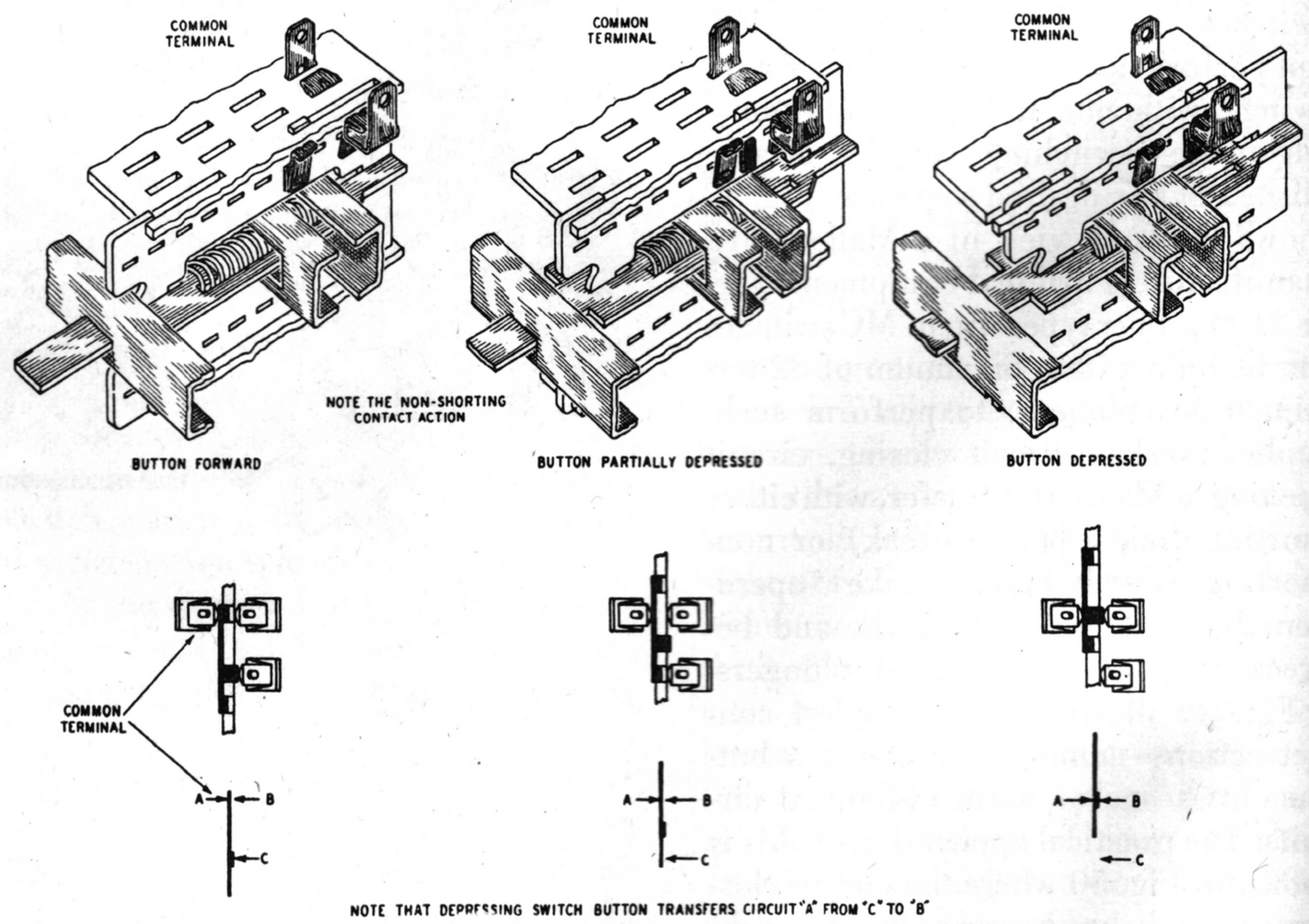

FIG. 51—*A Terminal Arrangement Frequently Used in Push-Button Tuning Provides a Circuit Transfer or Series Action. Fig. 51 Shows the Contact Arrangement, Fig. 52 Shows Its Application in a Typical Circuit.*

TYPICAL APPLICATION

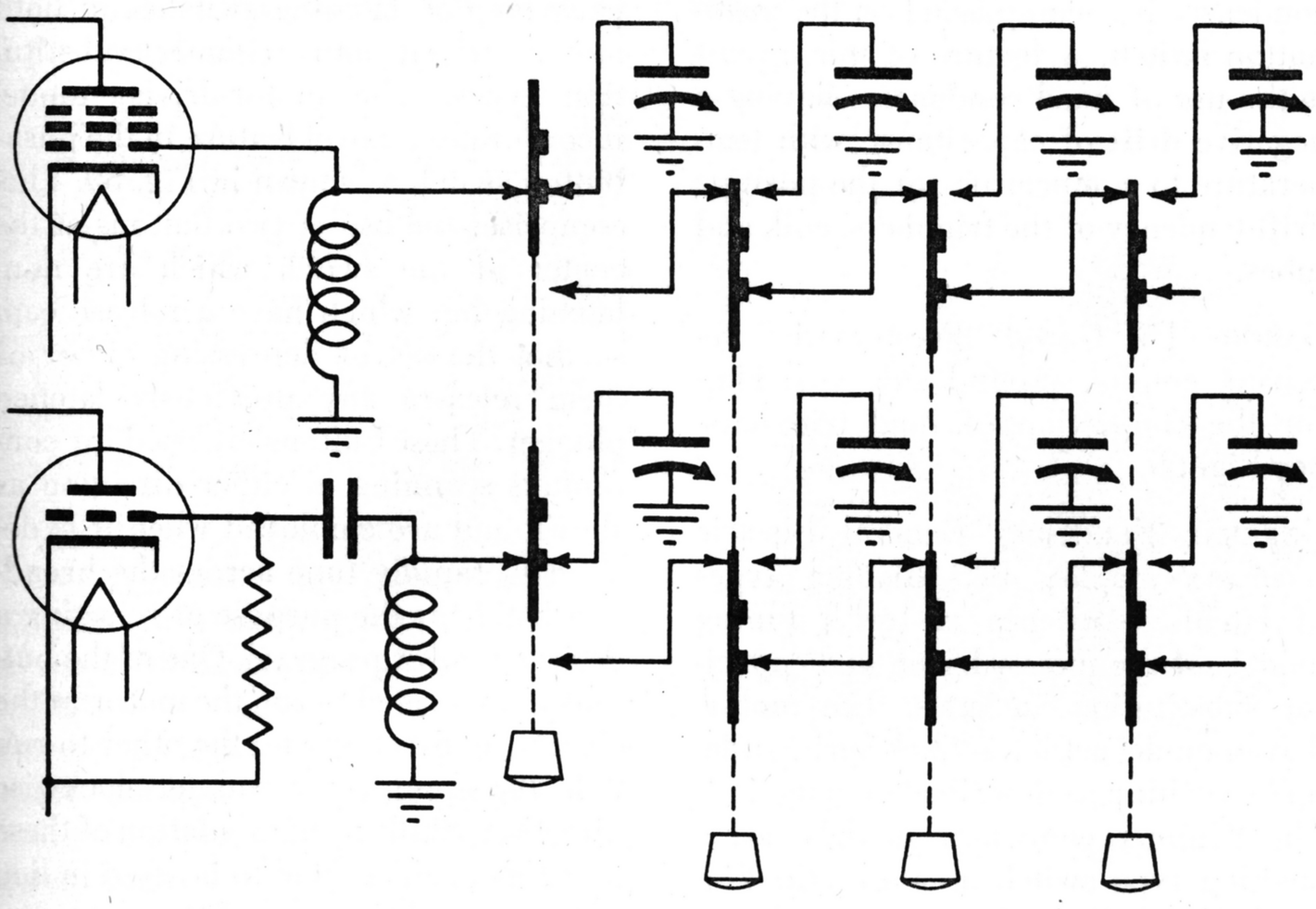

FIG. 52—*Radio Receiver Station Selection. Transfer Type Circuit.*

NOTE: *Button No. 1 transfers tuning to the gang condenser. Other buttons used for station selection.*

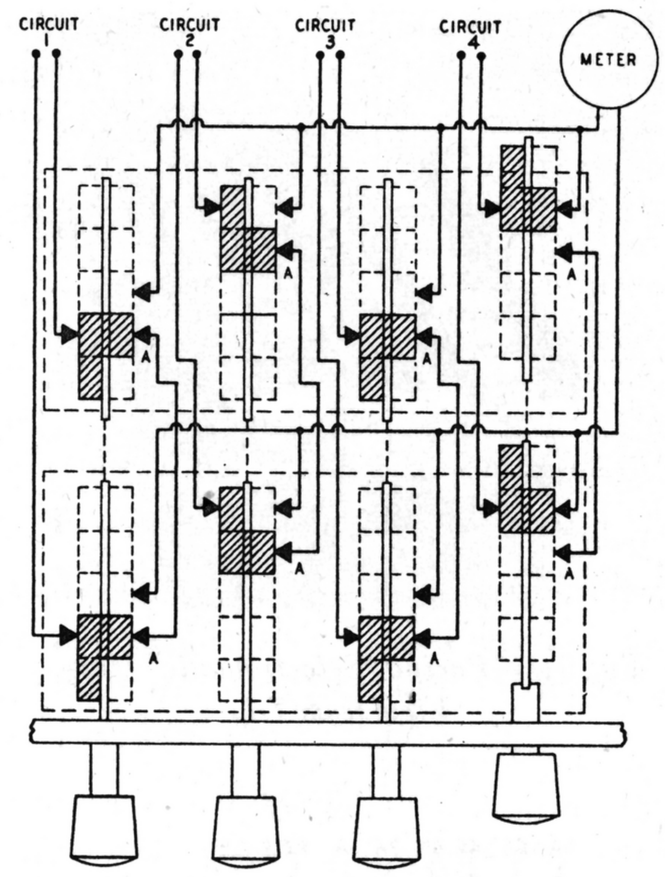

FIG. 53B

Series Operation Principle with Mallory MC Switch

illustrated in Fig. 63. A shielding box with partitions as indicated by dotted lines separates the individual groups of trimmers. Shielded cables of a low capacity type connect these trimmer groups to the input, detector, and oscillator transfer switches as described in Note 6A.

A somewhat different latch assembly is a feature of the "Selectromatic" unit shown in Figs. 54A and 54B. This unit which is intended for use in converting existing two gang receivers to push-button operation employs a side acting bar for holding and releasing the plungers. This design is similar to the one in use in apartment house telephone systems. The plungers are turned from round rod stock and have cone-shaped locking grooves which co-operate with round holes in the latch bar. The latch bar is forced to one side by a spring which causes its hole to overlap the edge of the cone, thus preventing the cone from returning to its released position. When a plunger is depressed, its cone aligns the hole in the latch bar causing the latch bar to move sideways. As the cone moves through the hole in the bar, the bar is in such a position that any previously held plunger cone will pass through it thereby releasing the previously selected circuit. In use the individual sections of this switch are paralleled across units of the gang condenser. When the release button is pressed these circuits are opened allowing the receiver to be tuned manually by the gang condenser. When using the automatic unit the gang condenser is turned to its minimum capacity stop.

The Howard push-button switch is used as shown in Fig. 55 in a separate conversion unit as described in Note 6D and Fig. 74. A feature of this switch is the use of silver-plated steel wire loops for terminals. These loops are connected to ground by the actuated plunger which itself is silver-plated. Since the unit contains its own converter tube it consti-

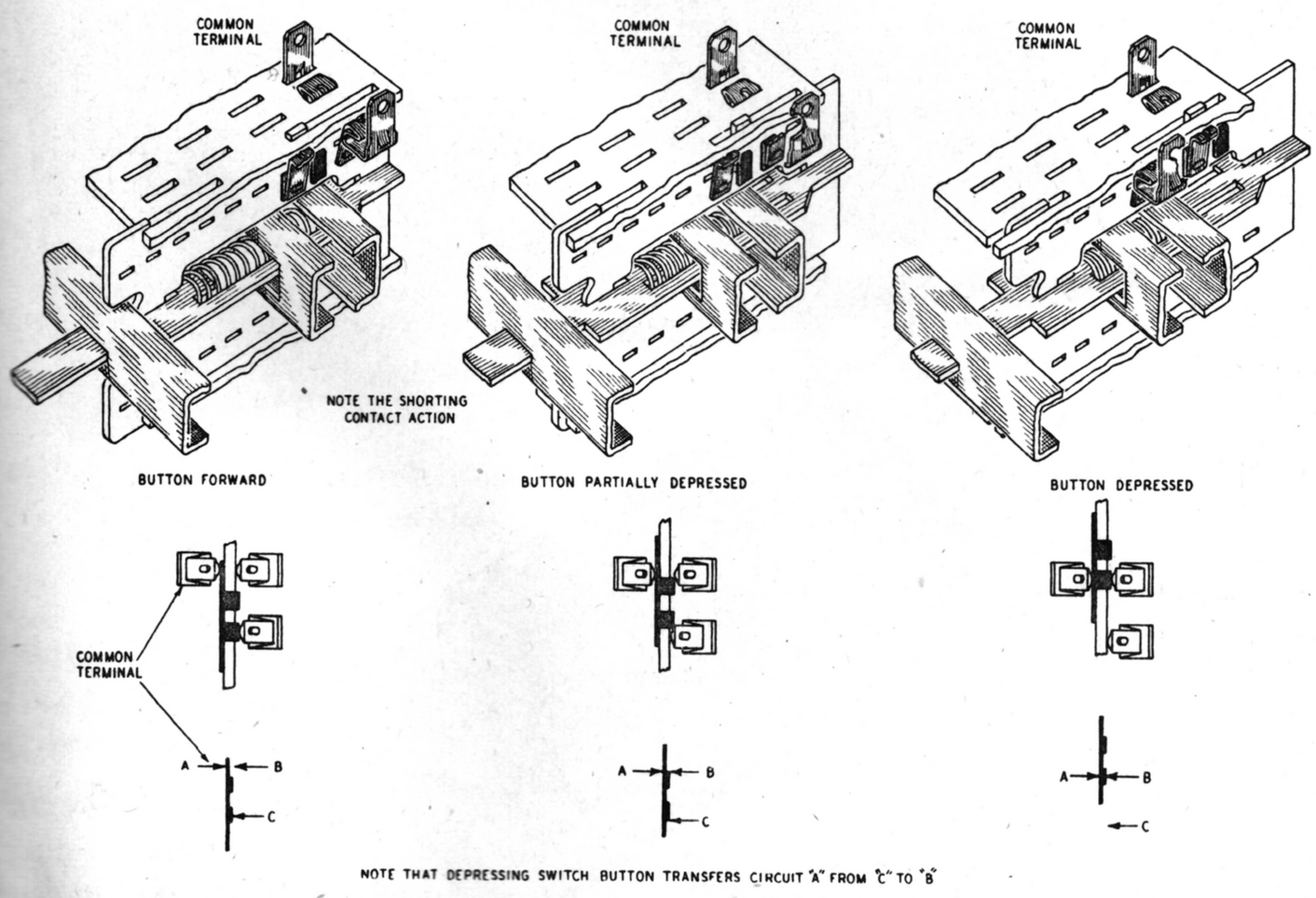

FIG. 53A

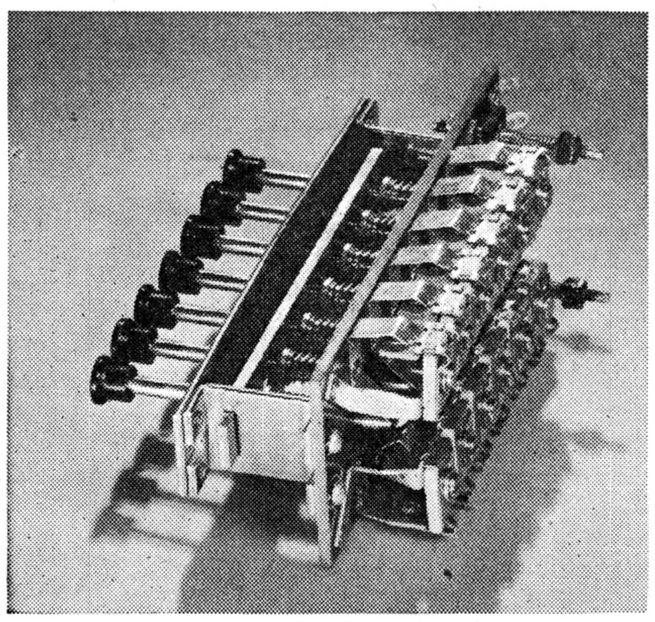

FIG. 54A—*Pacific "Selectromatic" Unit—View from Top*

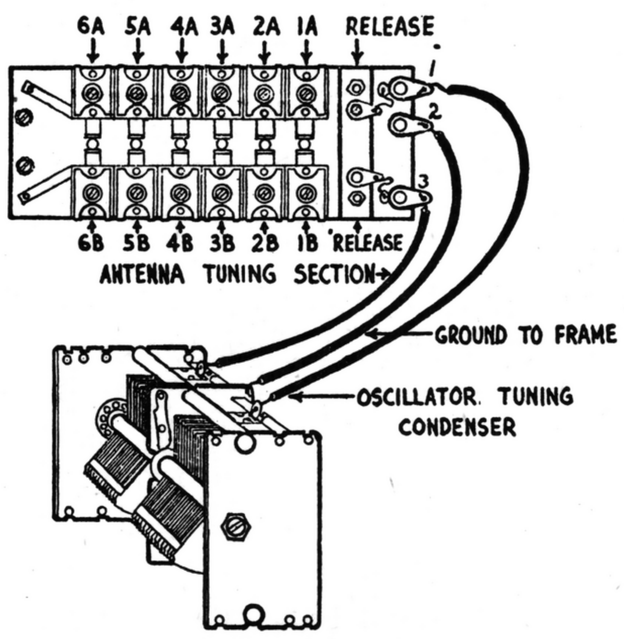

FIG. 54B—*Pacific "Selectromatic" Unit—Wiring Diagram*

tutes the entire pre-amplifier oscillator and detector of a superheterodyne. The addition of a rectifier and filter makes possible in the type 211 converter a unit which may be used for remote control purposes with the radio receiver to which it is attached tuned to a frequency below the broadcast band (540 kc.) and acting as an I.F. amplifier.

AIR KING—Trimmer condenser switching is employed with the series or "L" terminal. This allows one of the push-button positions to be used for the selection of the gang condenser. See Fig. 71A and Note 6D.

AUTOMATIC ELECTRIC—Iron core tuning is employed in the oscillator circuit of several models with switching accomplished on the ground side of the circuit. Note 6B and Fig. 66 cover the details of circuit connections.

ERLA—The series operating or "L" terminal circuit is used as illustrated in Fig. 71A. Transfer switching to gang condenser is accomplished on the push-button switch. A feature of this circuit is the use of fixed condensers having a negative drift of capacitance with temperature to compensate for the positive drift tendency of the trimmers, coil, and tubes.

GAROD—The Garod "Prestomatic" receivers employ ground side switching for the connection of dual trimmers. See Fig. 69.

GENERAL ELECTRIC—General Electric receivers employ two distinct types of latching switches in touch tuning models of the motor-driven and capacitor substitution varieties. The motor-driven model actuates "jack spring pile-up" switching as described on page 184. The trimmer condenser models use a latching type switch as shown in Fig. 73. This switch employs wave band type terminals with contactor shoes carried by strips of thin bakelite. Connection is made to the high potential side of the circuit. Further details of the switching as regards the transfer button are described in Note 6D, page 176.

GILFILLAN BROS.—Models of this company employ latching switches in both motor driven and trimmer substitution types. The motor-driven model incorporates a novel feature in the push-button switch as shown in Fig. 59. This comprises the use of two buttons at the center of the switch which are non-latching but which have a release cam so that the act of depressing either of them releases any previously latched plunger. These buttons are used for continuous scanning in either direction as shown and are employed when it is desired to rapidly tune across the broadcast band for the purpose of selecting a desired type of program. One of the buttons is connected to run the motor in the clockwise direction and the other to run it in the opposite or counter-clockwise direction. Skillful manipulation of these plungers enables them to be used in lieu of the manual tuning knob.

In the automatic "Touch Tuning" models, condenser substitution is employed with transfer switching in one of the push-button units as described in Note 6D.

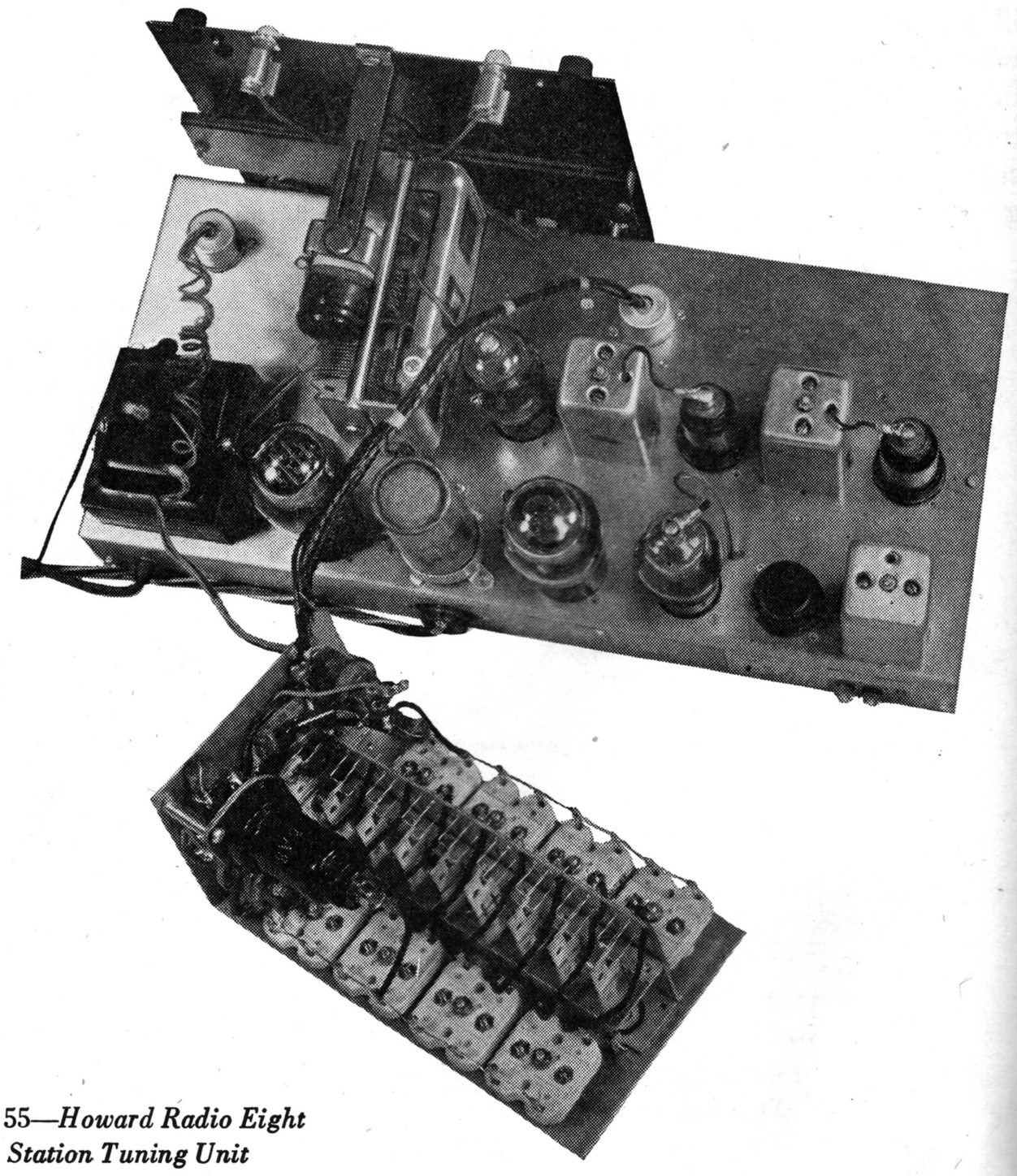

FIG. 55—*Howard Radio Eight Station Tuning Unit*

HERBERT HORN—Herbert Horn motor-driven models employ a circuit similar to that shown in Fig. 75.

HOWARD—The motor-driven models use a latching type push-button switch with series connection (see Fig. 71). The transfer switch opens this series circuit to prevent operation of the motor while on manual tuning.

Tuned circuit substitution models employ a separate converter tube as described and illustrated in Figs. 74 and 55.

NOBLITT-SPARKS—In these receivers a double row construction switch similar to that illustrated in Fig. 48 is employed to connect three sets of trimmer condensers. A shield is interposed between the switch terminals to prevent couplings between circuits which might result in instability. The method of mounting the trimmer condensers and connecting them to the switch terminals is shown in Figs. 56, 56A, 57, and 57A. In this switch the sliding contactor shoe is grounded and switching is performed between the low or rotor side of the trimmers and the frame or ground. Transfer from manual to automatic tuning is performed by the wave change switch whose counter-clockwise position transfers coil circuits to trimmer tuning as described in Note 6B.

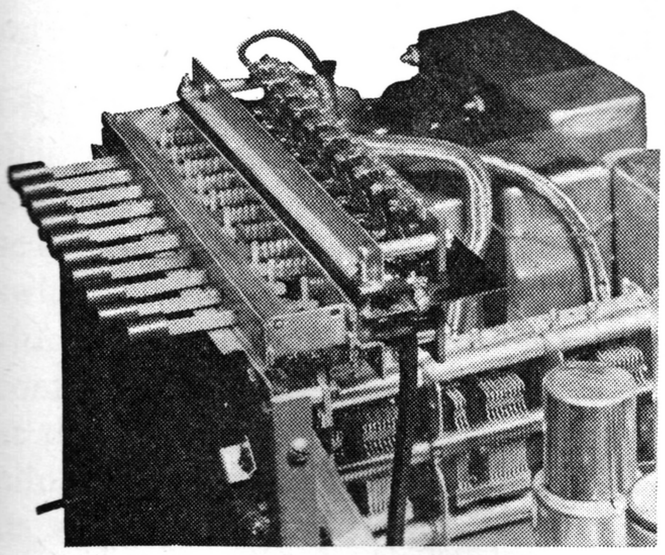

FIG. 56—*Noblitt-Sparks (Arvin) Ten-Station Selector Switch—Top View*

PACIFIC RADIO (Chicago)—The "Selectromatic" tuning unit has been described.

PACIFIC (Los Angeles)—Several models employ condenser substitution with the push-button switch in the high side of the circuit. The first or gang tuning position connects the gang condenser in the same manner in which the other positions select trimmers. A transfer position to manual tuning is used on the wave band switch.

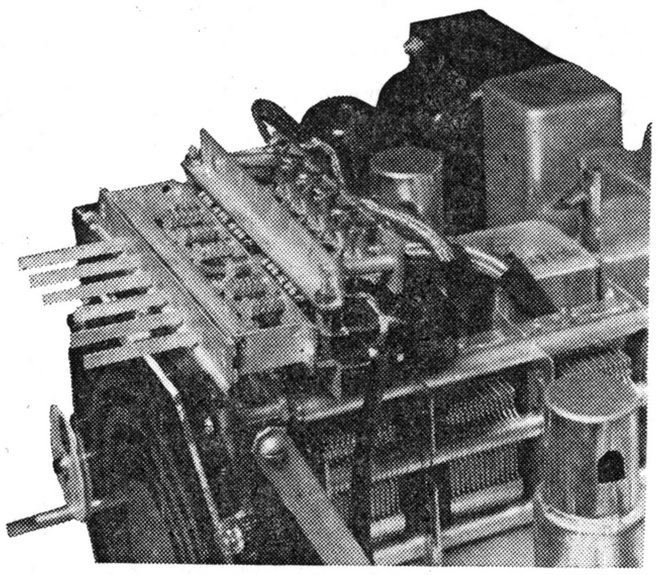

FIG. 56A—*Noblitt-Sparks (Arvin) Six-Station Selector Switch—Top View*

PACKARD-BELL—The Packard-Bell "Automatic Tuning" motor-driven model uses a series connected switch with two non-latching buttons for scanning operation as discussed above.

RADIO PRODUCTS — "Touch-O-Matic" tuning models of the Admiral line use a series-connected "L" terminal switch whose wiring is shown in Fig. 75. Operation of the "off" or transfer button is described in Note 6D.

SPARKS-WITHINGTON—The Sparton "Selectronne" switching unit serves to ground three independent sets of trimmers as shown in Fig. 63, and described in the introduction to this section.

WARWICK—The Warwick push-button switch combines series and parallel connections on separate sides on the same unit as shown in Fig. 72.

WILCOX-GAY—Models A48 and 7S5 which feature the choice of six selected stations without gang condenser tuning, use an insulated shoe construction in which the contact arm connects three terminals together. One of these terminals is the grid, another the coil and a third the selected trimmer. By using a tap on the coil it is possible to restrict the range of the trimmers without restricting frequency coverage of the re-

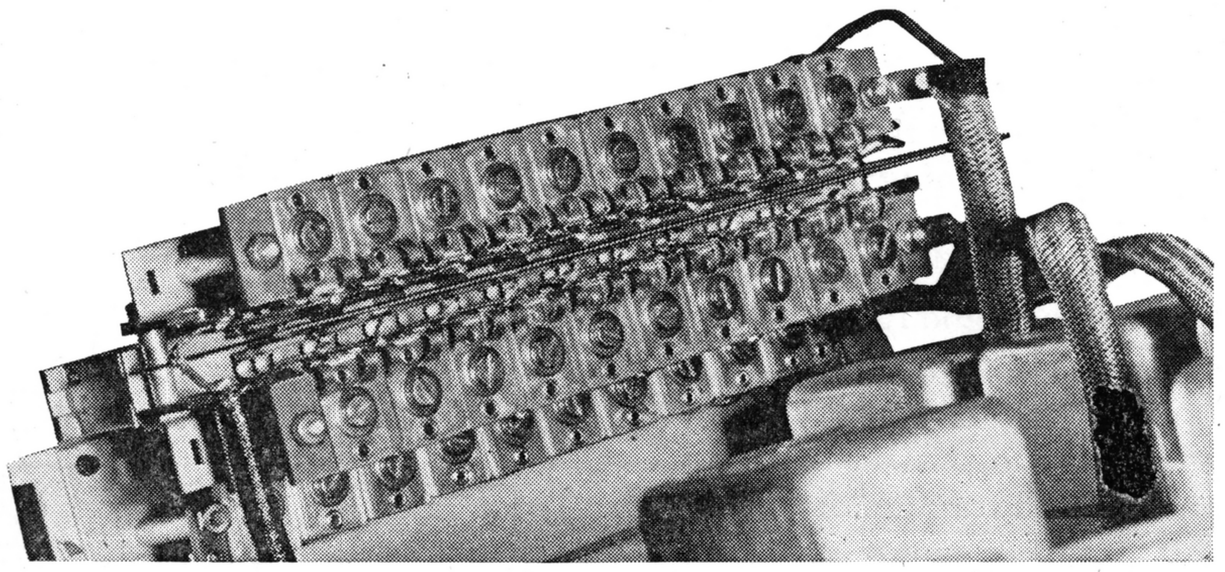

FIG. 57—*Noblitt-Sparks (Arvin) Ten-Station Selector Switch—Rear View*

R.C.A.—"Electric Tuning" motor-driven models make use of a latching type switch. The circuit connections are shown in Fig. 61. An optional feature of the system is the use of a switch similar to that incorporated in the receiver as a remote tuning unit. Shift to remote operation is controlled by a transfer switch as shown in the circuit.

The "Automatic Electric Tuning" models use condenser tuned input circuits and iron core trimmed oscillator circuits as shown in Fig. 23, page 157. The switch, of double row construction, is of the high side connection type.

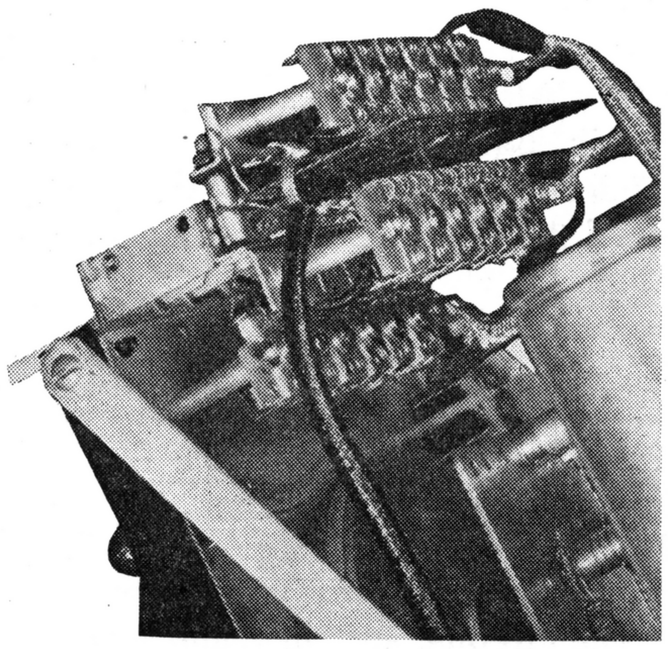

FIG. 57A—*Noblitt-Sparks (Arvin) Six-Station Selector Switch—Rear View*

ceiver. In a particular locality in which it might be desired to have more than the usual number of selected stations toward one end of the broadcast band, a simple shift of these coil connections could be made by the service engineer.

Note 5C

As noted in the introduction a few of the motor-driven receivers employ electro-mechanical latching of a station button which also acts as a station stop position. These buttons are latched in place in a fashion similar to that described under Note 5B although they are not strictly push-button switches.

GALVIN—"Electric Automatic Radio" models described in Note 1C13 and illustrated in Fig. 17, combine the functions of a latching push-button with an electrical station stop.

UNITED AMERICAN BOSCH — Several automatic tuning models employ a button latching principle in connection with the station stop mechanism.

Note 5D

Certain Crosley and Zenith receivers use a motor drive to assist manual tune and rapidly turn the tuning mechanism to the desired station reception point. The tuning operation is then completed with the manual tuning knob. The switch controlling the motor in this case has its shaft concentric with that of the manual tuning shaft and the switch is of the center spring return type. Rotation of the switch knob toward the right causes the motor to turn in that direction. Conversely the motion of the knob to the left produces motor rotation in the opposite direction. Figs. 81 and 82 illustrate this method of control.

Note 5E

In the Fada "Flashomatic" models a rotary selector switch is used as shown in Fig. 68 to connect pre-set trimmer condensers and indicate the station tuned by lighting an individual dial lamp.

SECTION 6

Transfer Devices and Circuits From Manual To Automatic Tuning

The circuits, switches, and mechanical devices employed to transfer operation from manual or continuous tuning to automatic tuning display more variation and are inter-related with more diverse circuit functions than any of the other elements of automatic tuning. The transfer operation in some receivers is handled by a separate switch, in others by a separate position on the wave band switch and in still another group by the use of one of the switches of the push-button selector switch. In many receivers a number of functions are performed by the transfer switch such as the removal of automatic frequency control operation when in the manual position, addition of transfer to phonograph operation, or removal of audio muting. The circuit diagrams used in illustrations of transfer switching will in some cases also serve to illustrate details to be covered under the headings of push-button station selector switches, audio silencing and AFC release.

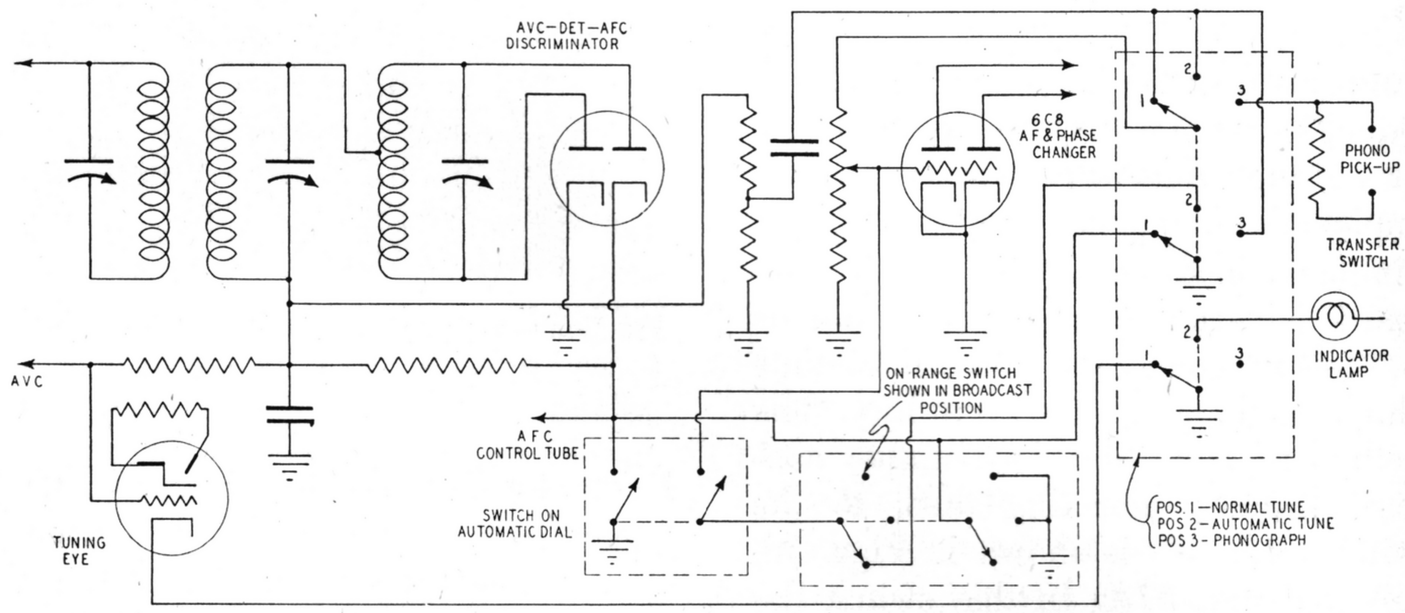

FIG. 58—*Colonial (Sears-Silvertone) Transfer Switching Diagram*

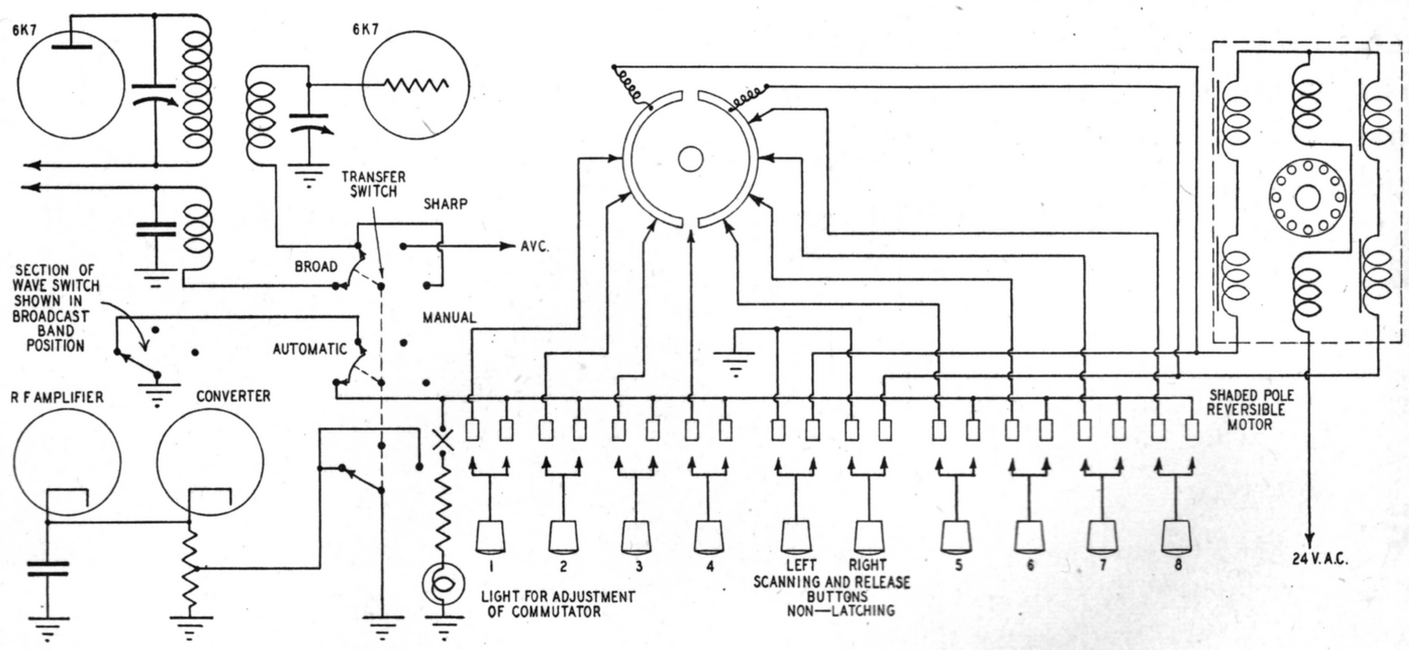

FIG. 59—*Gilfillan Bros.—Transfer Switching and Selectivity Control*

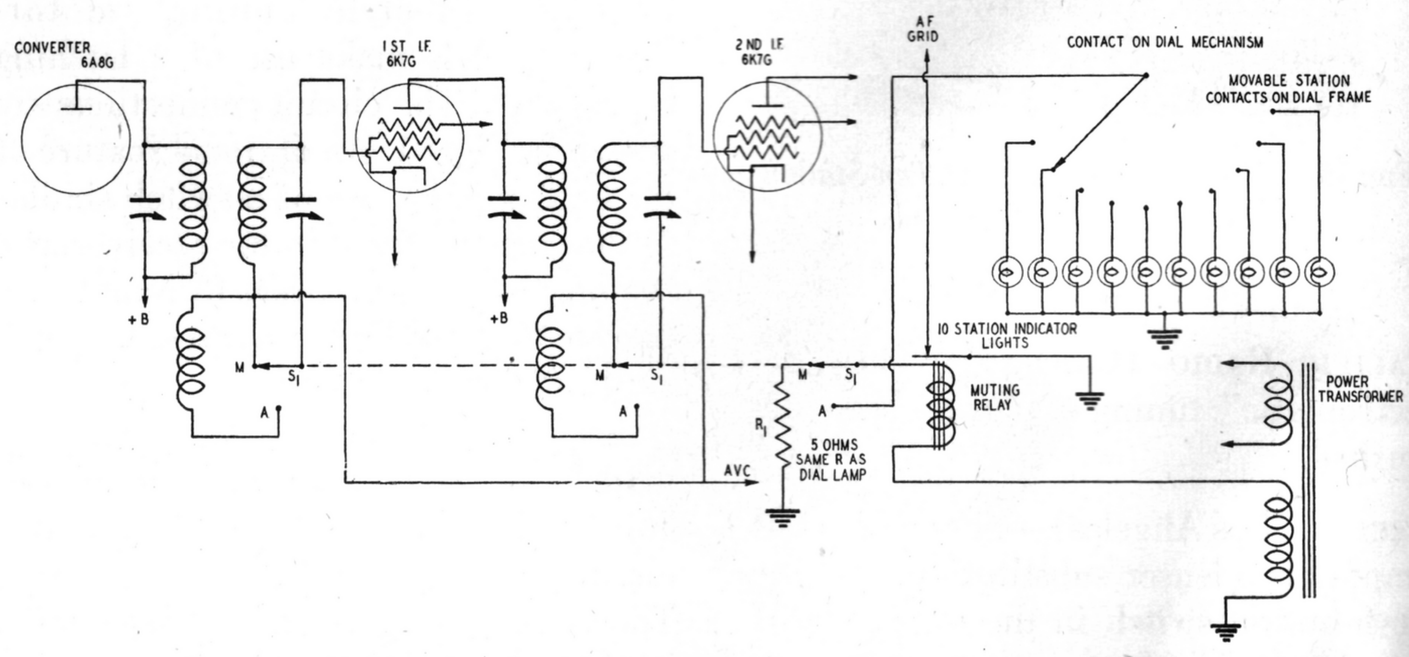

FIG. 60—*Noblitt-Sparks (Arvin) "Phantom Tuning"—Circuit Diagram*

Note 6A

The use of a separate transfer switch for changing from manual to automatic tuning is found in receivers of all three classifications of automatic tuning. The transfer switch is found to handle RF, AF, motor or dial lighting circuits and in many cases, combinations of these circuits.

COLONIAL—Fig. 58 shows the interconnection between three separate switching groups employed in some of the Colonial (Sears-Silvertone) receivers. The three-point switch shown at the right in Fig. 58 provides for normal or manual tuning in its first position, automatic tuning in its second position and phonograph operation in its third position. It consists of three separate sections. The upper group serve to connect the audio grid to either the detector or the phonograph pick-up. The middle group interconnects with the wave band and dial switches to provide the release of AFC and audio muting when in the broadcast manual position, using these functions in the automatic position and the short circuit of the detector output when in phonograph operation. The lower switch serves to connect an indicator lamp while in the automatic tuning position. The wave band switch carries contacts which disconnect the AFC system on both of the short wave positions as well as rendering the audio muting circuits inoperative in short wave positions.

GILFILLAN BROS.—This model (circuit diagram shown in Fig. 59) combines the operation of transfer with that of selectivity control. The three-position switch when in its counter-clockwise position provides for automatic tuning by completing the motor supply circuit and at the same time operates on the coupling of the IF transformer to broaden its response. In the center position the receiver is used for manual tuning with the IF coupling adjusted for sharp response, the motor circuit open and the sensitivity of RF amplifier and converter altered by change in bias. The third or clockwise position provides for manual operation with broad response of the IF amplifier. In this position the bias has been returned to the same condition as in position one but the motor circuit is open to prevent the use of the automatic tuning function. An addition-

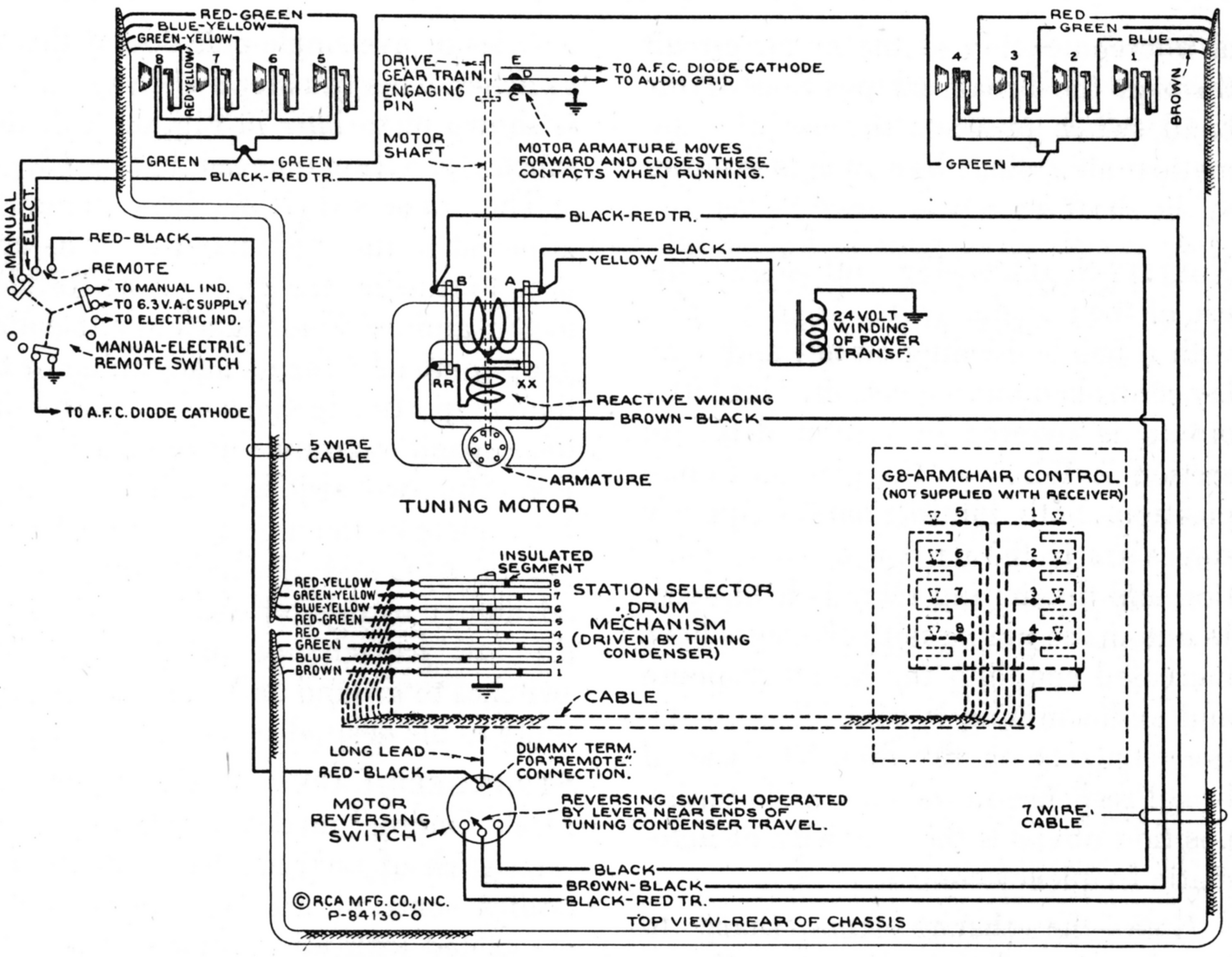

FIG. 61—*R.C.A. Motor-Tuning System—Wiring Diagram*

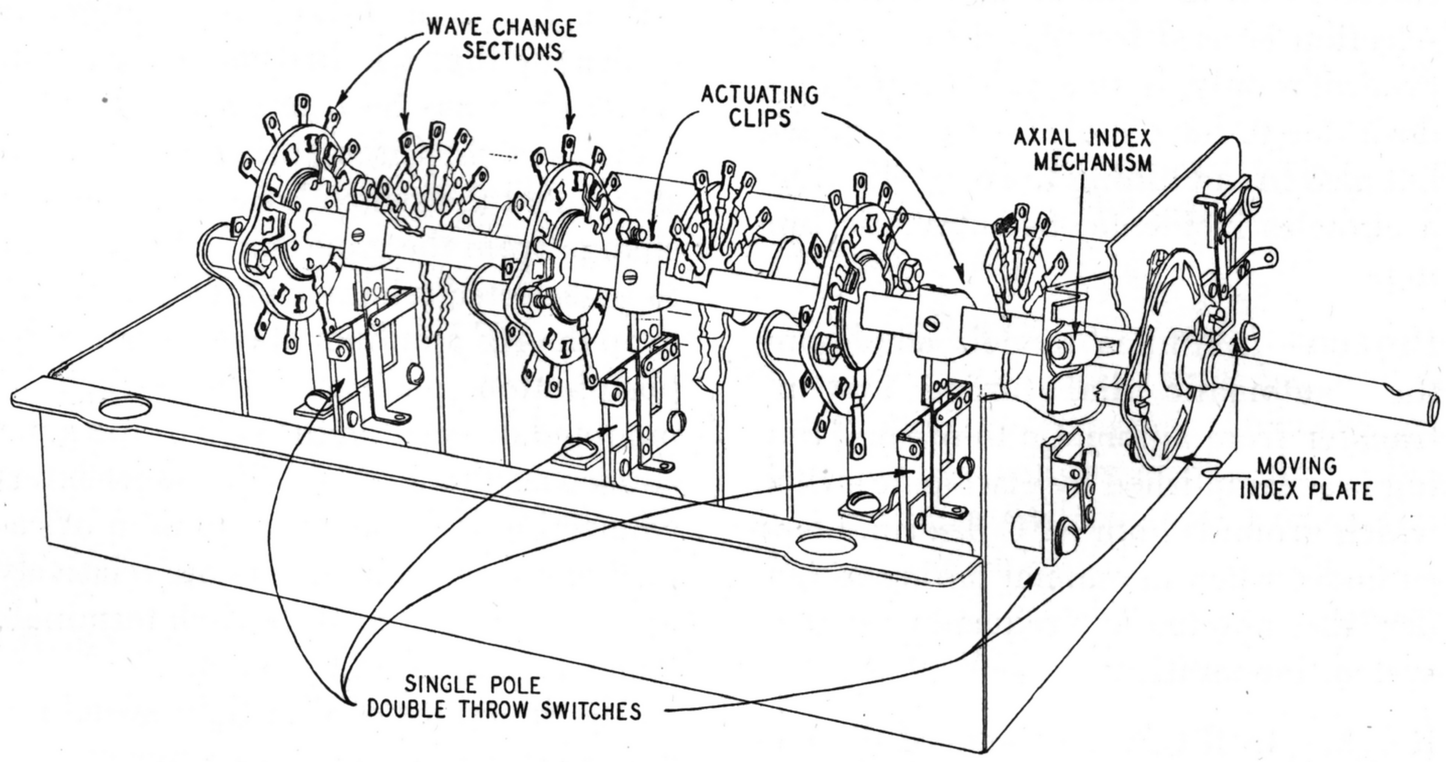

FIG. 62—*Sparton "Selectronne"—Transfer Switch Assembly*

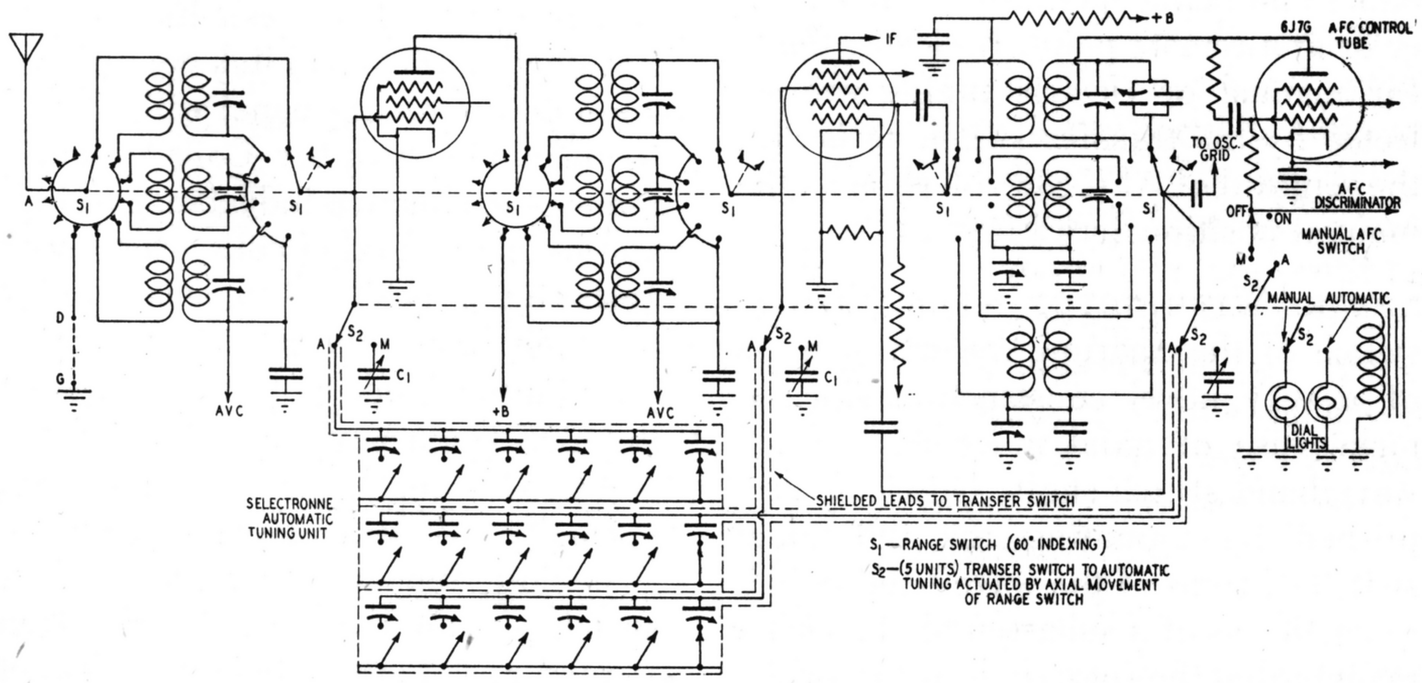

FIG. 63—*Sparton "Selectronne"—Schematic Wiring Diagram*

al interconnection of the motor circuit through the broadcast position of the band switch prevents the use of automatic tuning when the switch is in either of the short wave positions.

NOBLITT-SPARKS—Fig. 60 shows the use of the transfer switch in connection with a band-widening circuit and a relay controlled muting circuit. This latter circuit is covered in greater detail in section 7. When on the manual tuning position, both intermediate frequency stages are in the narrow or sharp position and the muting relay is held open. In automatic tuning both IF stages have increased coupling for broad response and audio muting is controlled by station contacts on the dial. The use of broad response in the automatic tuning position obviates the necessity of automatic frequency control.

Note—the change from sharp to broad tuning when in the automatic position is used in a number of makes of receivers on the theory that automatic selection is used for high level or local programs only. In this case it is not only desirable to have high fidelity response but also broad tuning to cover slight inaccuracies incidental to automatic tuning.

PHILCO—In Philco models employing the "automatic dial tuning system" transfer from automatic to manual tuning is accomplished by a two-pole switch which grounds both AFC discriminator cathodes when in manual tuning to render the automatic frequency control system inoperative.

R.C.A.—In R.C.A. receivers of the motor-tuned type the transfer switch serves the additional function of selecting either automatic operation at the receiver or at a remote point. Indicator lights for manual or electric tuning are selected by the transfer switch as is also the removal of AFC control while on the manual position (see Fig. 61).

SPARKS-WITHINGTON—The transfer switch of the Sparton "Selectronne" is of a very novel construction since it makes use of axial movement of the wave band switch shaft. This is accomplished by mounting the individual switch sections of the wave band switch to partitions of a subassembly in such a manner that the rotor staff of the switch can be moved longitudinally to operate a series of five single-pole double-throw switches. This transfer switch assembly is shown pictorially in Fig. 62 with the schematic wiring diagram in Fig. 63.

The three switch sections mounted adjacent to the wave band sections are used to transfer the grids of the RF, detector, and oscillator tubes to either the gang condenser for manual tuning or to their respective sections of the push-button capacitor group for automatic tuning. The two switches shown on the front plate of the unit are used to operate the AFC and dial light circuits. An advantage of this type of switch lies in the low capacitance of the transfer switches to ground and their close proximity to the desired switching points.

STROMBERG-CARLSON—The "Electric Flash Tuning" models employ a transfer switch of unique design which embodies some of the functions usually associated with wave band switches. In fact the switch is constructed with wave band or rotary selector type terminals although it is of sliding construction as shown in Fig. 64. Because of its construction it has been termed a "shuttlecock" switch. Circuit diagram Fig. 65 shows that the switch is not only used to change from the gang tuning condenser to preselected trimmer units but also to drop the RF amplifier stage when on the push-button position. The switch is mounted directly on the side of the gang condenser thereby assuring short interconnecting leads and a minimum of capacitance to ground due to the relatively great separation of the switch terminals from each other and ground.

The functions of dial light switching and release of automatic frequency control on manual positions are additional functions handled by the switch. The switch is moved between its two positions by a mechanical link connecting a knob on the tuning panel with the stud in the moving member. Coils L1 and L2 reduce the effective inductance of input and oscillator tuning coils when on the push-button position to accommodate the high minimum capacitance of the push-button bank and allow tuning to the high frequency and police stations. Note—The inclusion of what would normally be considered wave band switching functions on the transfer switch are an indication of the trend toward push-button wave band switching.

Note 6B

Transfer from manual to automatic tuning is often accomplished by providing an extra position on the wave band switch. This method is frequently found in receivers of the Tuned Circuit Substitution Types. It provides a ready means of removing the minimum capacitance of the push-button condenser group when on the manual or continuous tuning position. In some of the motor tuned types the use of additional contacts on the wave change switch provides the function of limiting automatic operation to the broadcast band by breaking the motor supply circuit when the band switch is in any of the short wave positions. The use of the band switch for transfer has been briefly indicated in the description of typical substitution tuned systems on page 157 and illustrated in Figs. 21, 22, and 23, page 157.

AUTOMATIC RADIO—In several of the Automatic Radio models an unusual switching sequence is provided to change from a conventional variable condenser-tuned circuit to a combination of trimmer and iron core tuning on the automatic position. Fig. 66 shows the use of a three-position wave change switch consisting of six single-pole three-position units. When in the automatic tuning position the detector input is transferred to a separate antenna coupling coil tuned by individual trimmer units. On this same position a novel oscillator circuit is in use employing a separate tube (type 76) connected as a Colpitts or capacitance feedback type. The Colpitts is ideally adapted to iron core trimmed circuits since it does not require the use of feedback coupling coils and allows the switching of the iron trimmed coil units by a simple single-pole grounded switch.

ERLA (SENTINEL)—The Erla "Flash Tuning" and "Automatic Tune Wheel Dial" models employ circuits on the band switch to control the lamp circuit, audio silencing and AFC release as shown in circuit diagram Fig. 67. Audio silencing and AFC details are unusual in that a bias change of the RF and IF amplifiers are used (see Section 7).

FADA—Fig. 68 shows the use of a wave band switch for the dual functions of transfer to automatic tune and IF band widening when on the automatic posi-

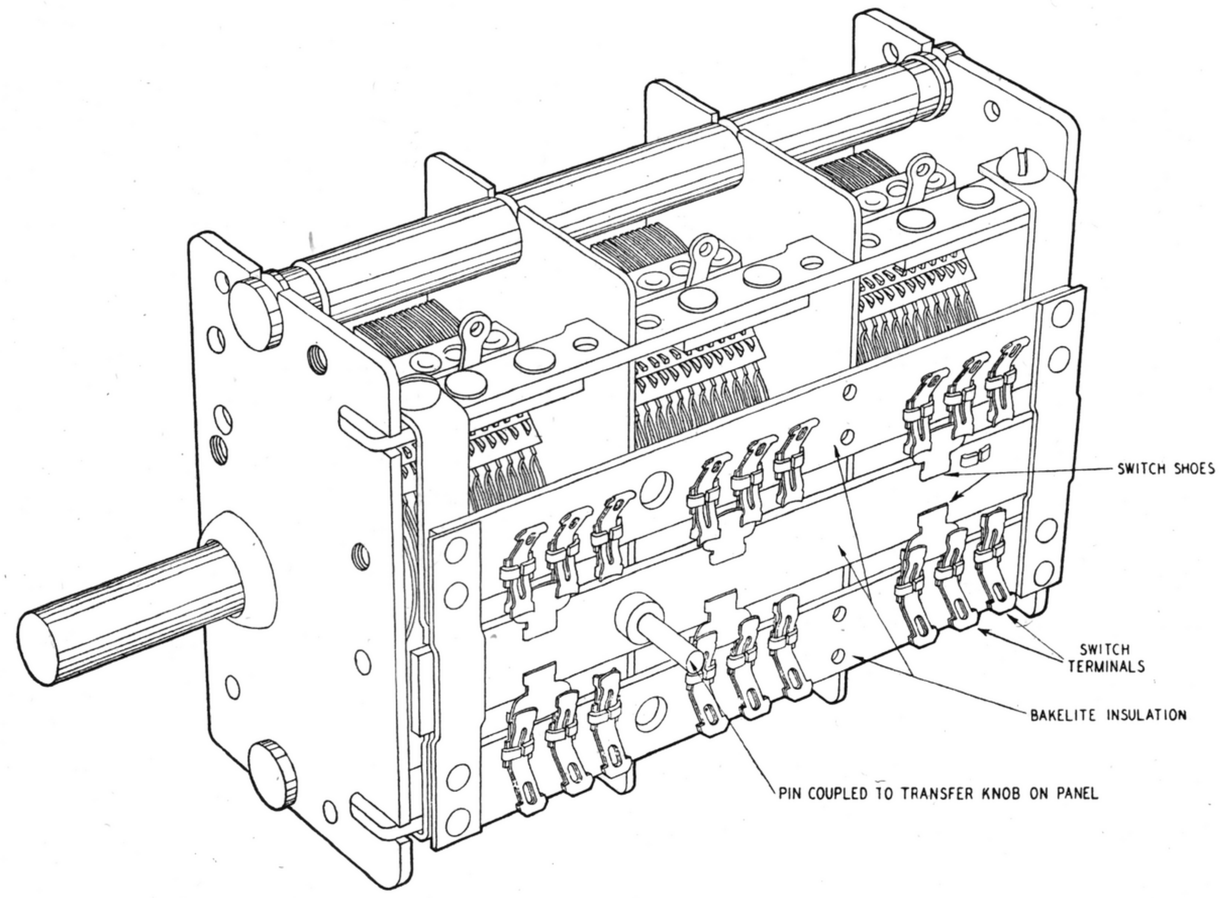

FIG. 64—*Stromberg-Carlson "Electric Flash Tuning"—Shuttlecock Transfer Switch Assembly*

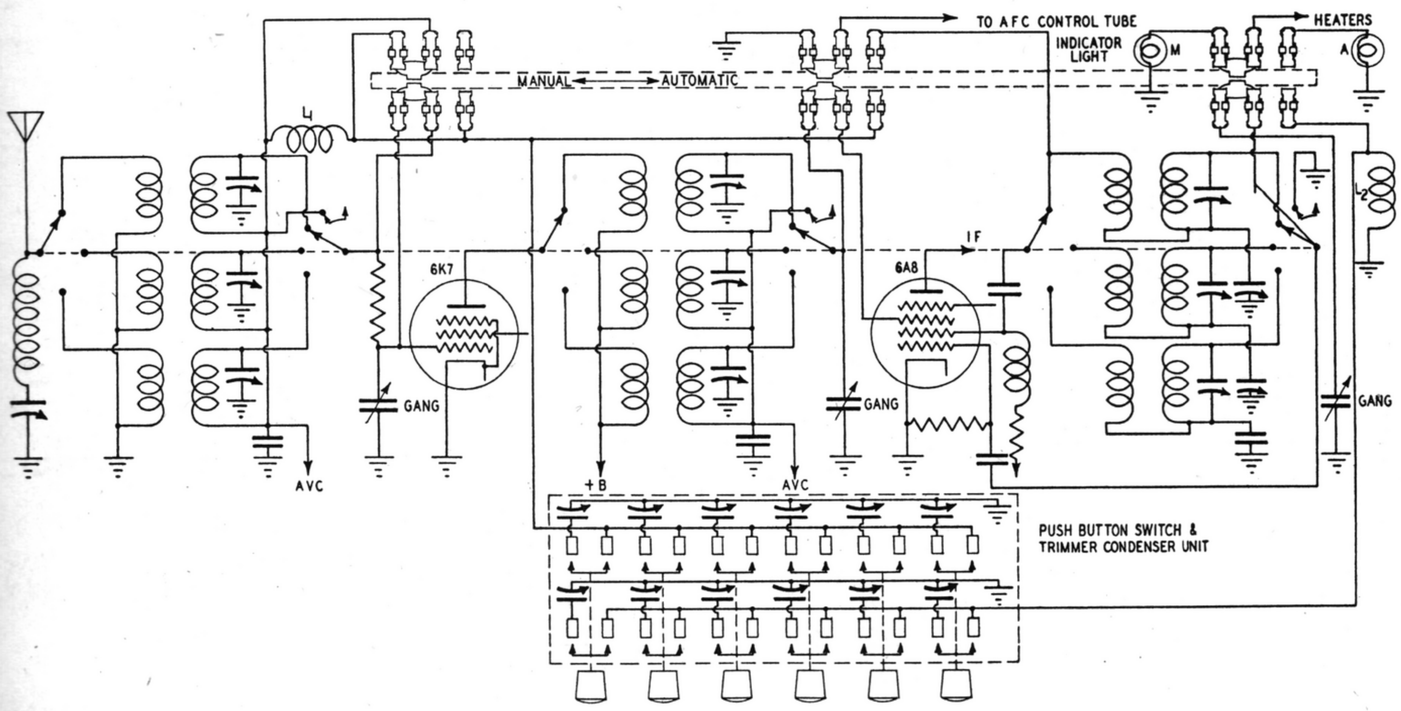

FIG. 65—*Stromberg-Carlson "Electric Flash Tuning"—Circuit Diagram*

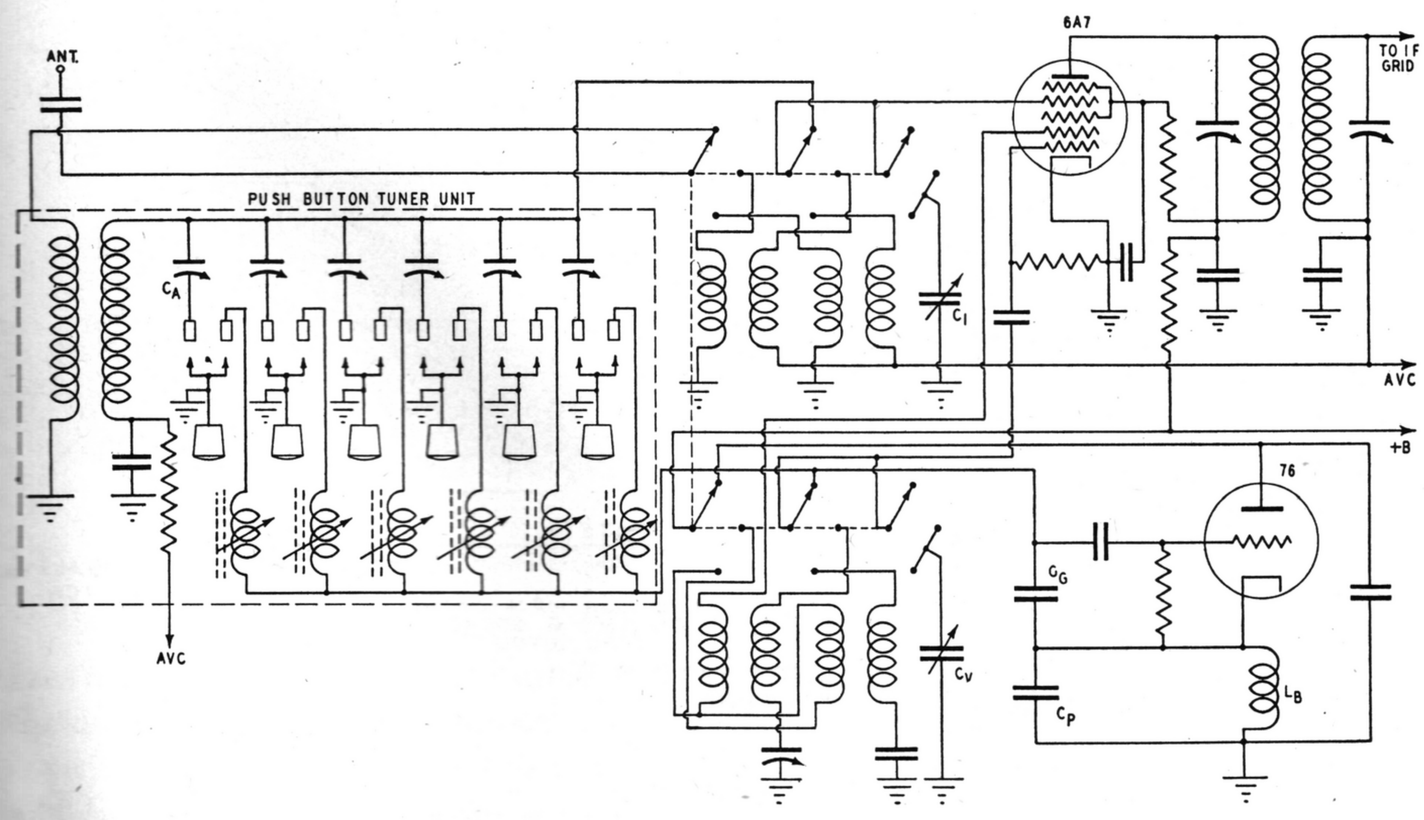

FIG. 66—*Automatic Radio Iron Core System—Circuit Diagram*

tion. An auxiliary switch is provided to narrow the IF band width during the alignment of the pre-set station trimmers. This precaution assures accuracy of adjustment and compensation for slight drift of tune in use since the receiver is always set for wide band reception when in the automatic tuning position.

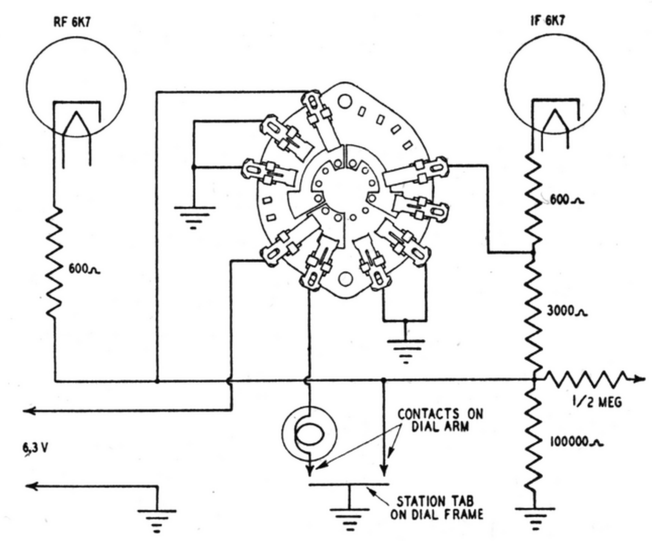

FIG. 67—*Erla-Sentinel Muting and AFC Release Circuit Diagram*

GAROD—A simple switching sequence is used on the wave band switch of the Garod "Prestomatic" receivers to connect the circuits for pre-set trimmer tuning as shown in the schematic wiring diagram of Fig. 69.

NOBLITT-SPARKS—Several models of the Arvin line employ wave band transfer switching to trimmer tuned circuits. The first or counter-clockwise position of the band switch is used to connect the broadcast coils to the pre-set trimmer units by a switching arrangement similar to that shown in Fig. 22, page 157.

R.C.A.—The schematic diagram of an "Automatic Electric Tuning" model with iron core trimmed oscillator circuits is illustrated in Fig. 23, page 157. In this diagram the wave band switch which consists of two sections has been shown pictorially to clarify the various switching positions. It is shown in position No. 1, or automatic tune, with the circuits in use shown in heavy lines. It will be noted that in the next position of the switch the units of the gang condenser will be connected and the input trimmer condensers and iron core oscillator units disconnected.

Note 6C

In the Motorola electric automatic tuner whose latching system was de-

scribed in Note 1C13, transfer to manual tune is assigned to one of the push-buttons known as a release button. This release button operates a series of jack spring contacts which open the motor circuit, release or cut-out the AFC and open the audio muting. Thus when this button is depressed any of the latch buttons are released and circuits set up for manual tuning. This circuit is shown in Fig. 70.

Note 6D

A popular method of transfer from manual to automatic tuning in both the motor and tuned circuit substitution types is the utilization of one of the buttons of the push button station selector switch. This type of switch will be covered in greater detail in section 5. In the majority of cases the switch is of the latching or ladder type. The latch locks a button in place and releases any previously selected button. When the transfer switch is part of such a unit the receiver will be held in the manual tune position until it is desired to operate it automatically. In this case the selection of a particular station button transfers operation by the single motion of depressing the button rather than by two operations as would be necessary in all of the transfer devices previously described with the exception of Note 6C, which may be regarded as similar to the type under discussion.

In tuned circuit substitution receivers, push-button switch contacts are connected directly to the trimmer condensers and are part of the radio frequency circuits of the receiver. Two methods have been used for transfer as illustrated in Figs. 71A and 71B. In Fig. 71A a group of L-shaped terminals are used to produce a series switching sequence. When button one is depressed the grid and coil circuit is connected to gang condenser "G." When any other button is selected the gang condenser is disconnected and a pre-set trimmer condenser "T" tunes the coil. Fig. 71B shows a similar type of transfer switching with the exception that the trimmers are connected to a common bus when a station button is depressed. Figs. 72 and 72A illustrate the use of both of the above switching circuits in the same receiver.

Receivers introduced by Air King, Erla, Pacific (Los Angeles), and Warwick employ transfer switching of this type.

The manual button of this class of receivers may be regarded as an additional selected station button since the gang condenser may be set to a desired station other than those of the selected push button group.

General Electric—The General Electric "Touch-Tuning" Model F96, features a push-button switch in which the manual tune or transfer button com-

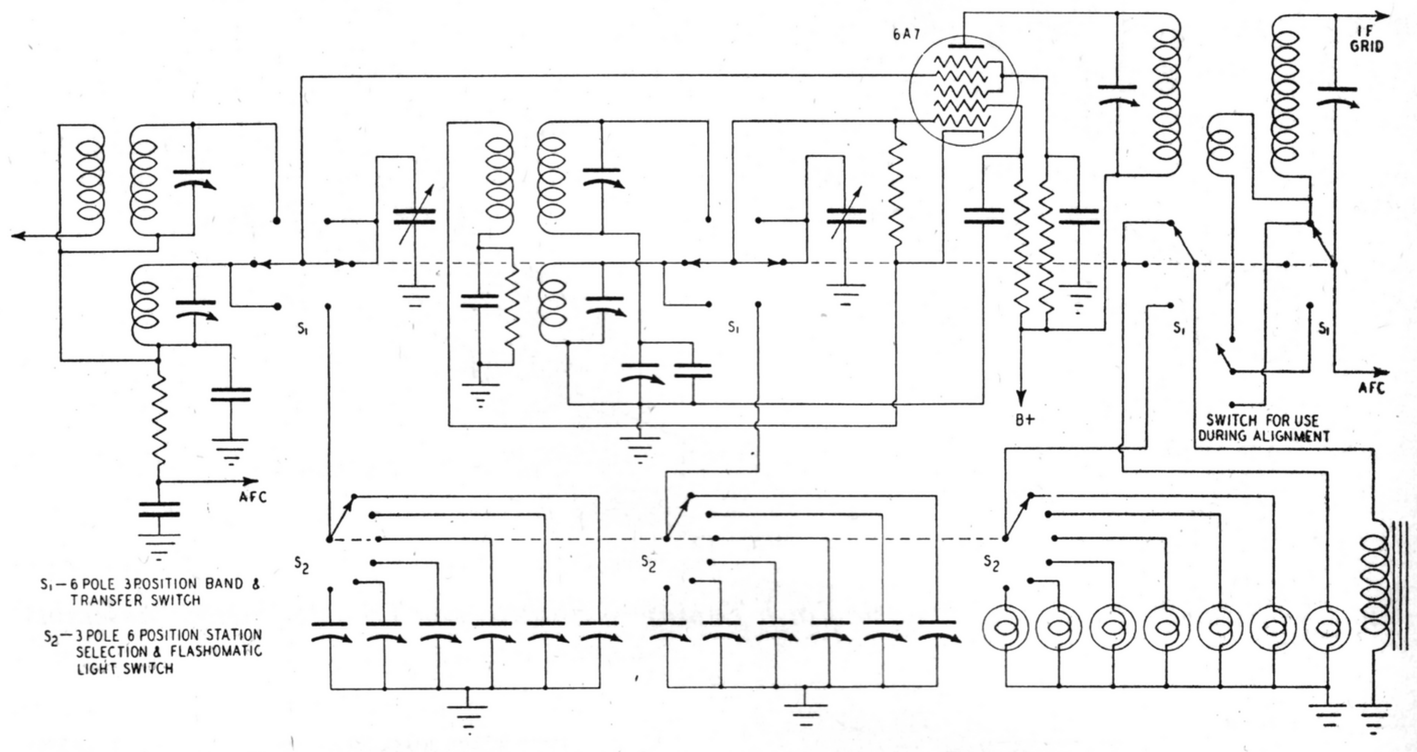

Fig. 68—*Fada Automatic Tuning—Schematic Wiring Diagram*

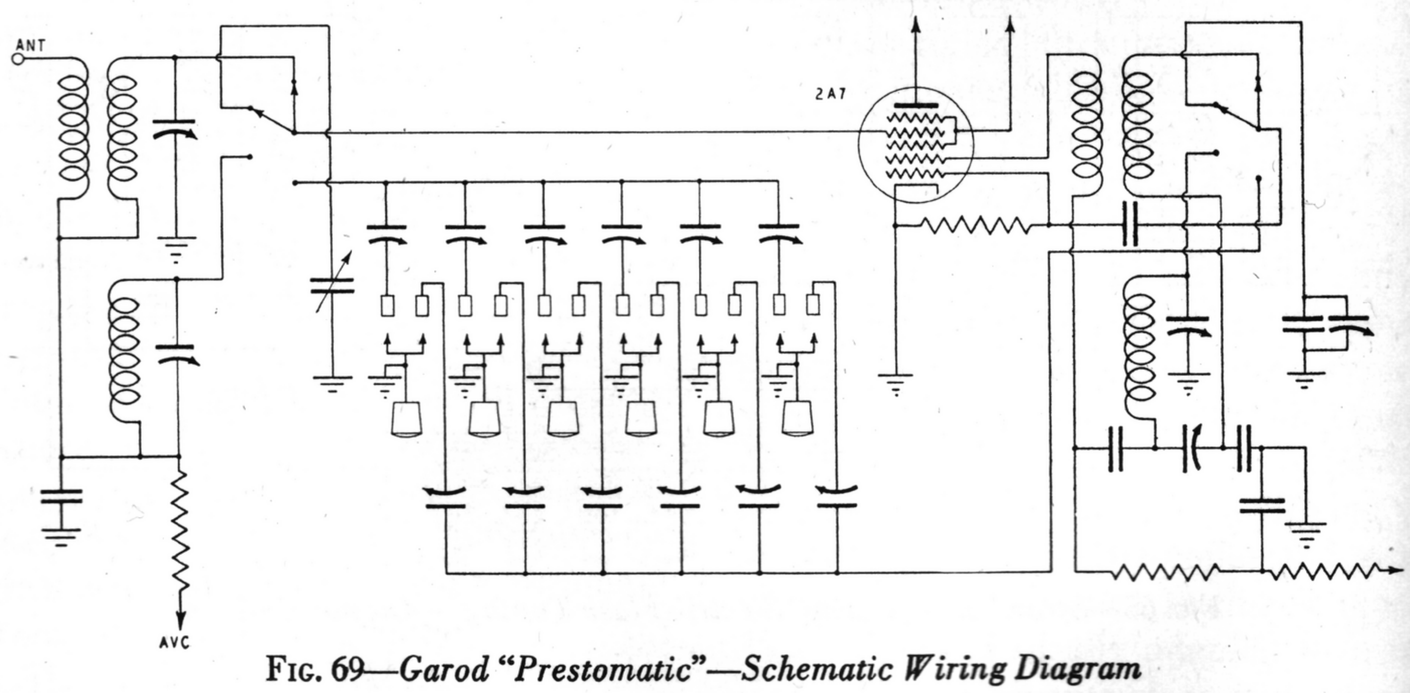

Fig. 69—*Garod "Prestomatic"—Schematic Wiring Diagram*

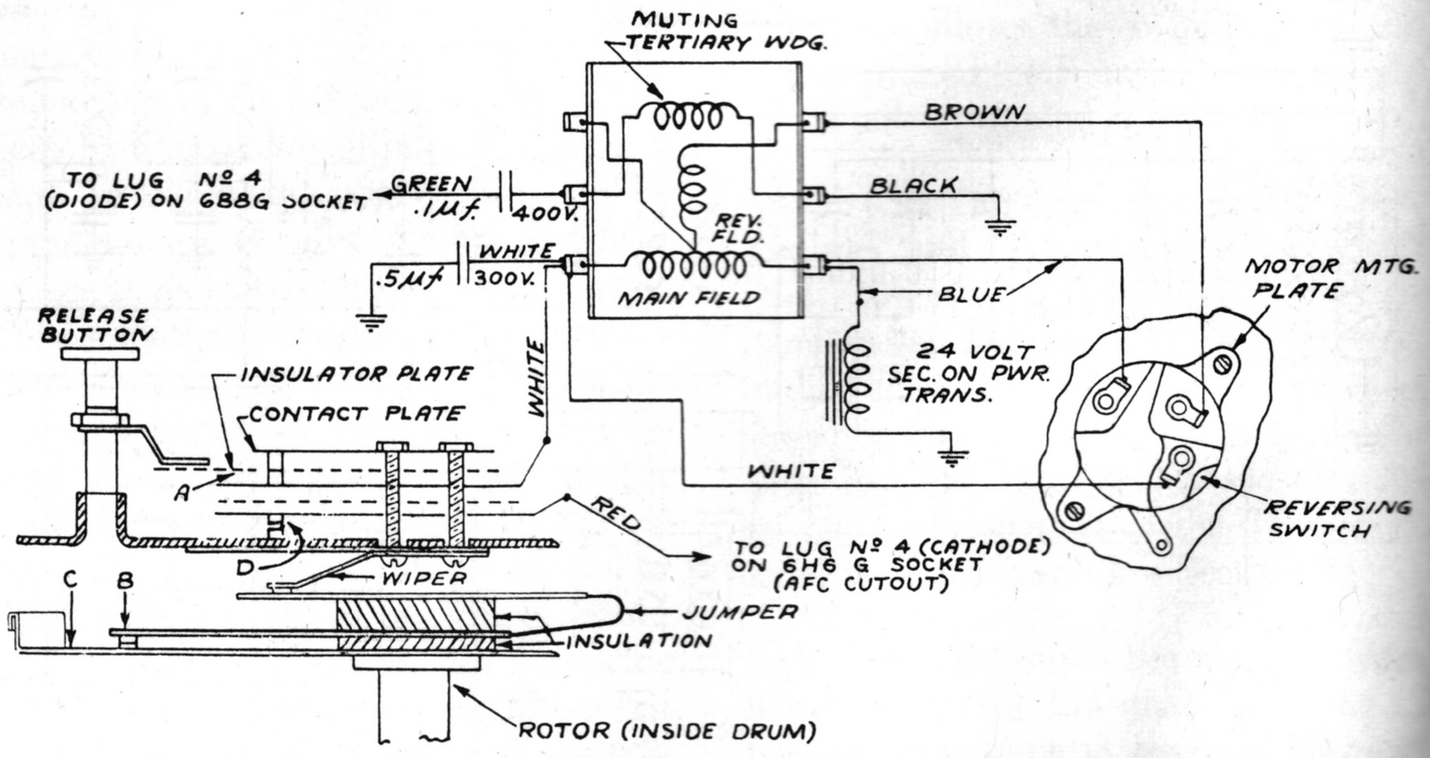

Fig. 70—*Galvin (Motorola) Electric Automatic Tuning—Wiring Diagram*

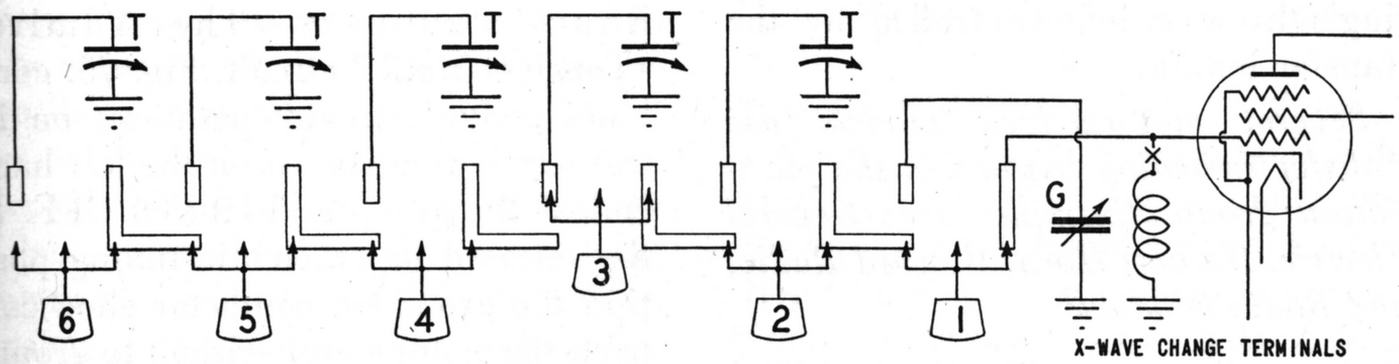

FIG. 71A—*"L"-shaped Terminals Used to Produce Series Switching Sequence*

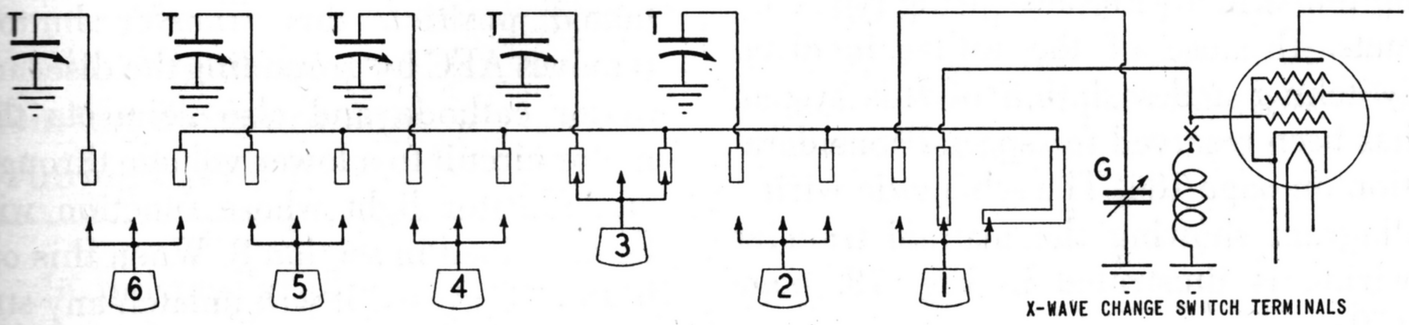

FIG. 71B—*Transfer Switching with Trimmers Connected to a Common Bus Bar When a Station Button Is Depressed*

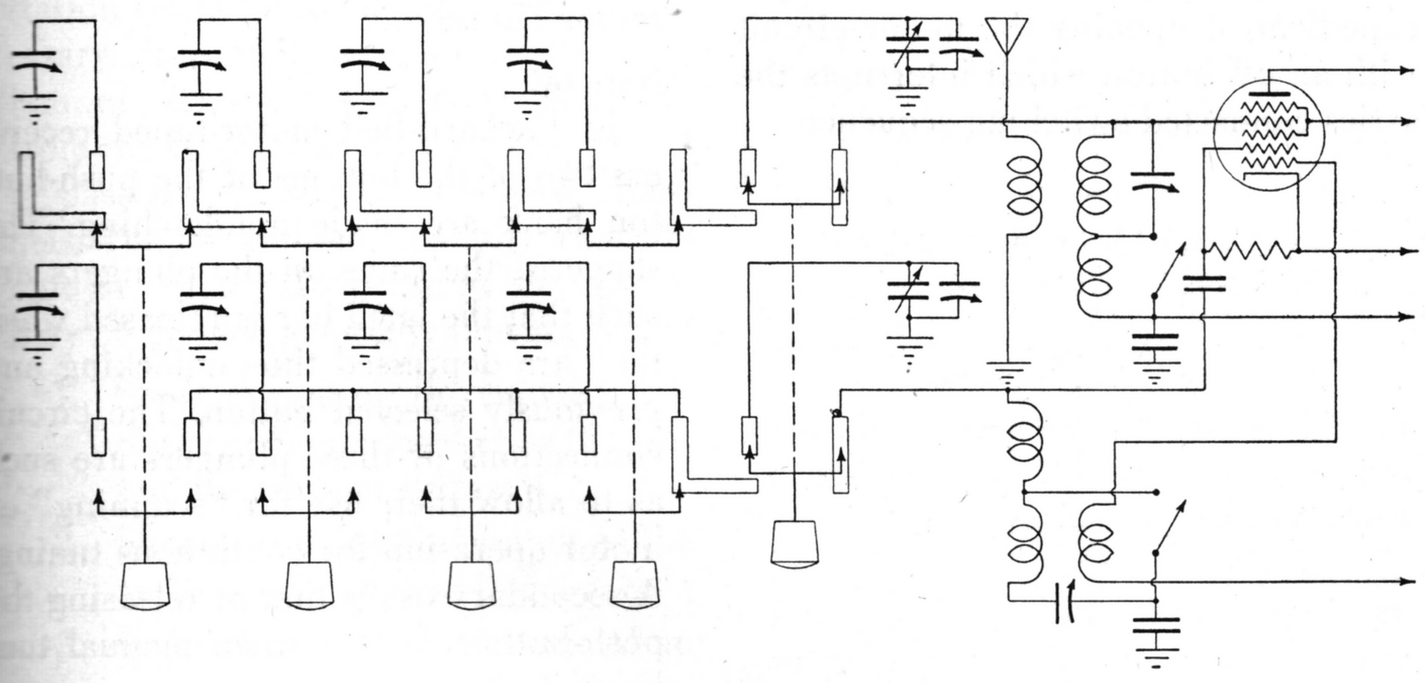

FIG. 72—*Warwick Transfer Switching as Illustrated in Figs. 71A and 71B*

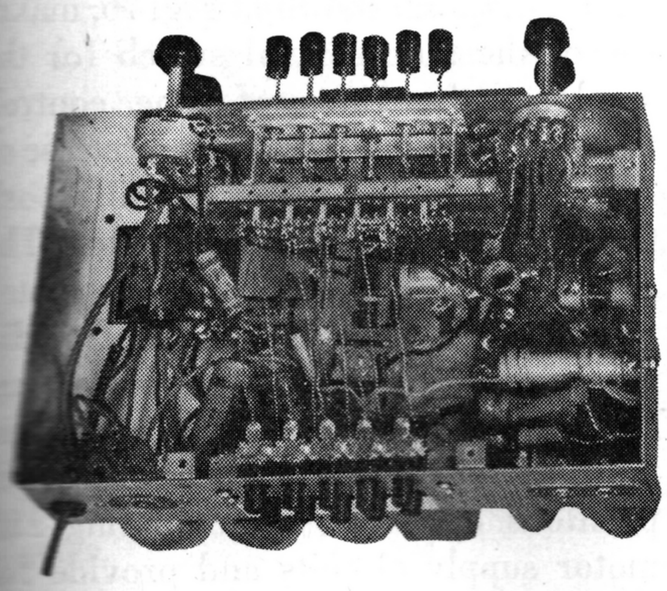

FIG. 72A—*Warwick Under-Chassis View*

bines a group of functions. Reference to schematic diagram Fig. 73 shows a similar switching sequence to that described in Note 6A and Fig. 65. Four separate units are actuated by the manual plunger which in common with the switches attached to the other plungers employ wave band type terminals. S1 and S2 serve to transfer the antenna circuit from the RF tube to the converter when on the push-button position. At the same time the pre-selected trimmer is substituted for the gang condenser unit. This operation drops the RF stage when on push-button tuning. Switch S3 serves the dual function of grounding the interconnecting link between switches S1 and S2 when the RF stage is operative on manual tuning and changing the receiver sensitivity by grounding a tap on the bias resistor of an IF tube when on the push-button position. Switch S4 transfers the oscillator grid circuit from gang condenser to pre-set trimmer condensers.

GILFILLAN BROS.—The Automatic "Touch-Tuning" Model 5T8 selects the gang condenser as the first position of the push-button switch in the same manner in which the trimmer condensers are selected. This is possible since the receiver is designed to operate on the broadcast band only.

HOWARD—Howard Radio models employing trimmer type station selection make use of a separate converter tube for the automatic tuning input and oscillator circuits. This allows the complete automatic unit to be plugged into receptacles on the chassis so that a model may be available with or without automatic tuning with no other change. It also permits the selector switch to have grounded contactor shoes since transfer switching may be accomplished in the B supply circuit as shown in Fig. 74. Other versions of this type of unit convert older type receivers to automatic tuning and employ a transfer switch which operates in the cathode circuit.

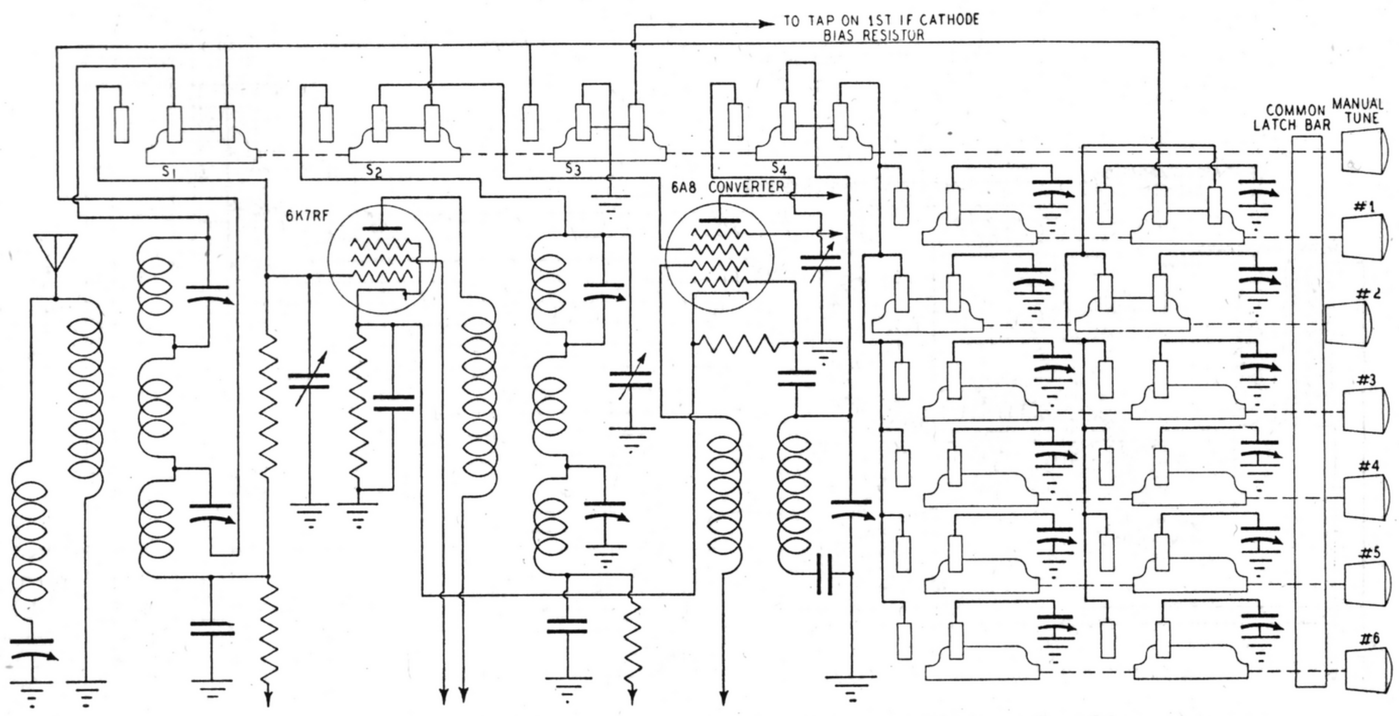

FIG. 73—*General Electric "Touch-Tuning"—Circuit Diagram*

PACIFIC (Chicago)—The Pacific "Selectro-matic" conversion unit is so designed that its input and oscillator trimmer units may be connected in parallel with the respective gang condenser sections. The gang condenser is set at its minimum capacitance during automatic operation. Transfer to manual tuning is accomplished by the simple expedient of opening the common bus to each of the trimmer banks by a double-pole single-throw switch controlled by the transfer button.

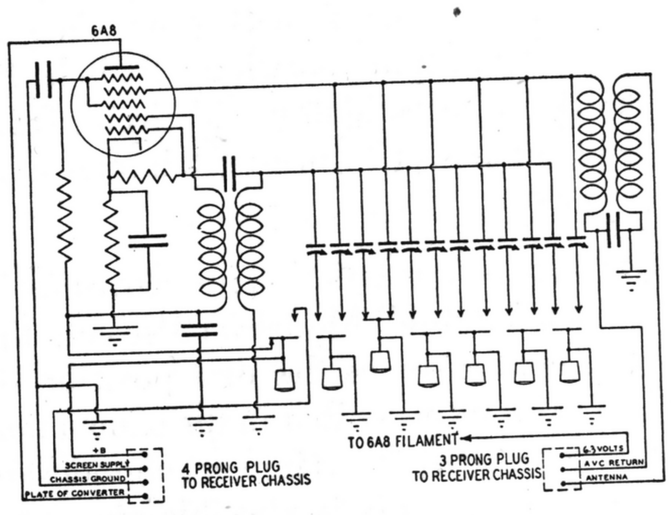

FIG. 74—*Howard Automatic Tuning Circuit Diagram*

Several motor-driven models use transfer switching buttons in the push-button group. Examples are: General Electric, Herbert Horn, Howard Radio, and Radio Products.

GENERAL ELECTRIC—The General Electric motor-driven "Touch-Tuning" models make use of a latching type push-button switch with jack spring type contacts. Because of the rather involved switching a description of this system has been reserved for special consideration on page 184. The schematic wiring diagram showing the manual transfer wiring is illustrated in Fig. 78, page 179.

HOWARD—The Howard "Motor Automatic" models 400A and 425A provide manual tuning transfer by the simple expedient of opening the motor circuit with an off button which interrupts the series connected switching sequence.

RADIO PRODUCTS—The Admiral "Touch-O-Matic" circuit, Fig. 75, combines several circuit operations on its transfer button shown on the left hand end of the group and labeled OFF. In the released or automatic tuning position the grounded contactor shoe connects the motor supply circuit to ground and allows automatic operations by depressing any one of the eight series-connected push-button circuits. In the actuated position this transfer button removes AFC by grounding the discriminator cathode and also connects the motor circuit to a lower voltage through an indicator light whose function will be described in section 8. When this off button is pressed it will unlatch any station button thereby breaking the series circuit to the motor. The Tiffany Tone Model IIA manufactured by Herbert H. Horn employs a similar transfer and motor circuit.

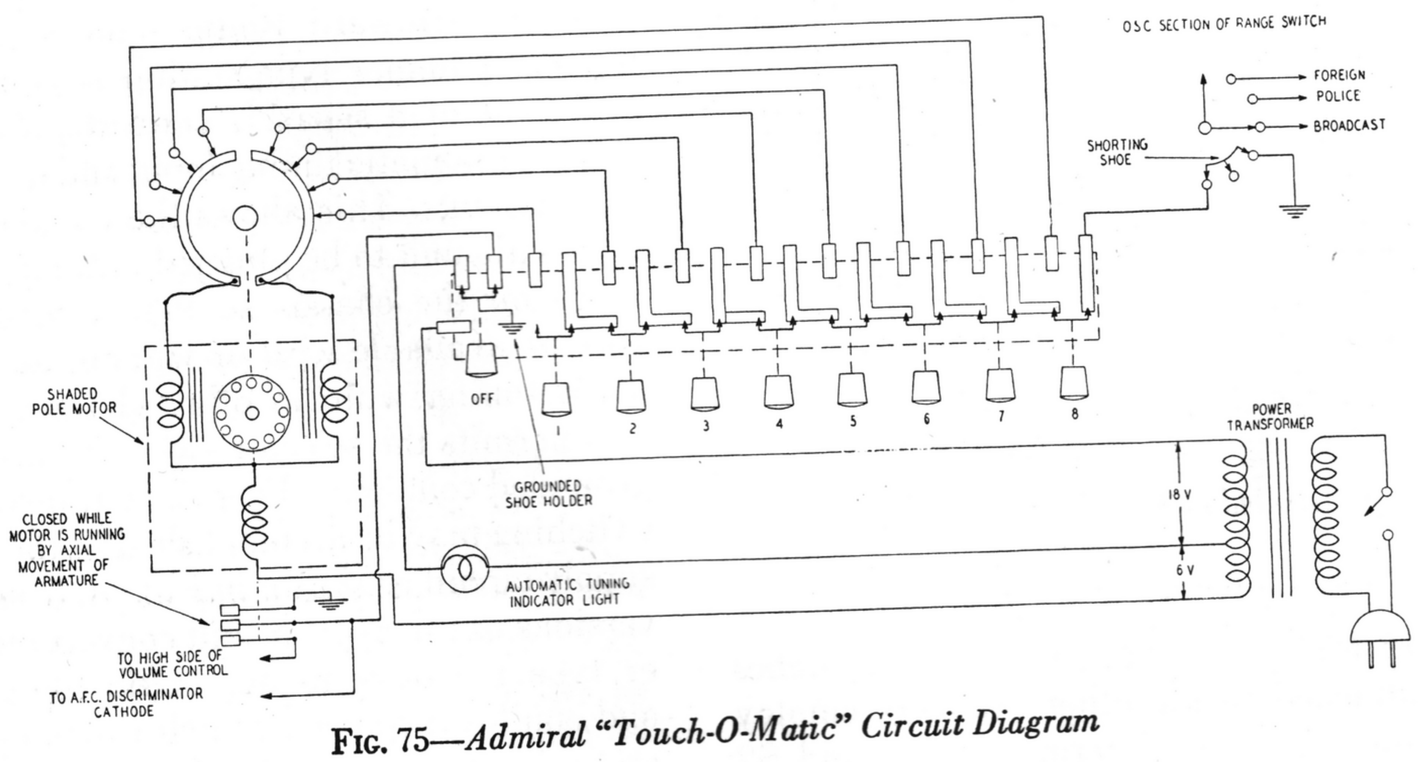

FIG. 75—*Admiral "Touch-O-Matic" Circuit Diagram*

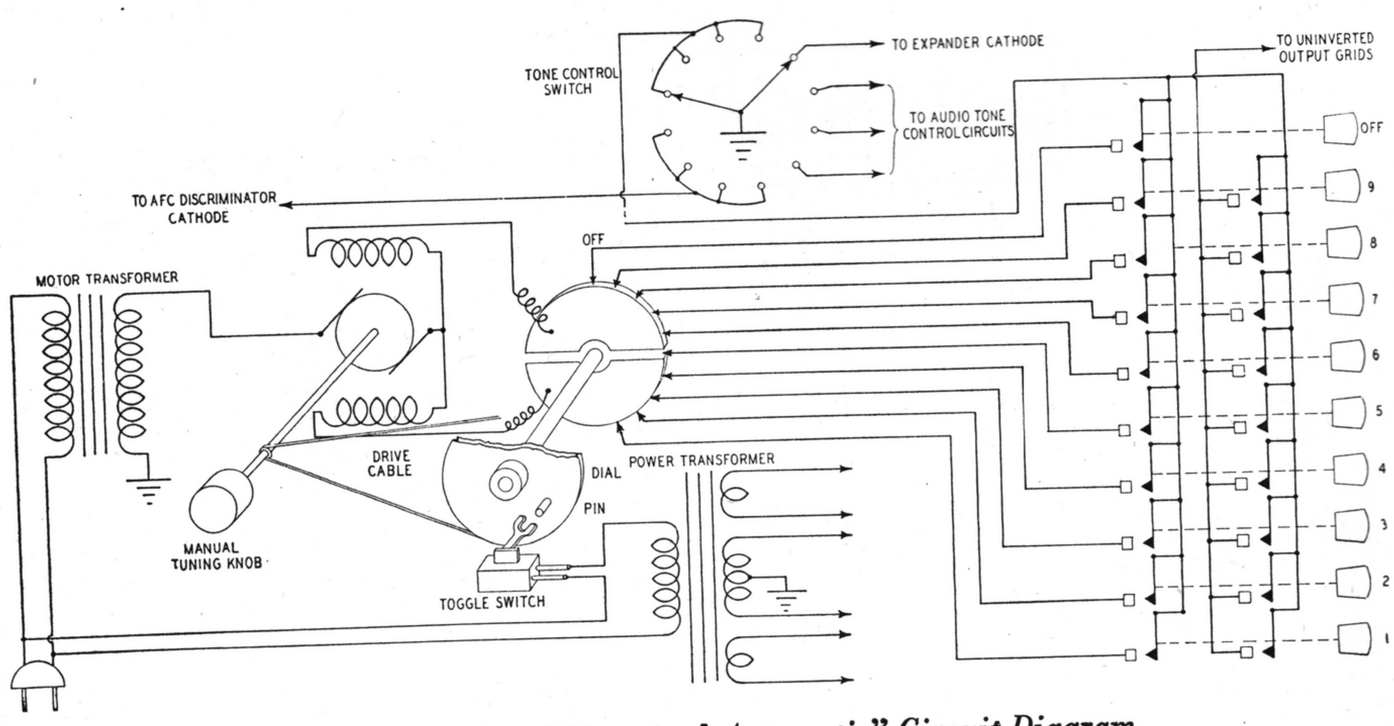

FIG. 76—*Midwest "Motorized Automatic" Circuit Diagram*

Note 6E

In Packard-Bell motor-tuned receivers two of the buttons of the push-button bank are made non-latching. The shape of the cams on the plungers are such that the latch bar is released when they are depressed thus unlocking any previously selected button. The circuit connections of these plungers are such as to allow their use for "scanning" or motor operation for continuous tuning. A secondary use is that of releasing the push-button control when manual tuning is desired.

Note 6F

The Midwest "Motorized Automatic" circuit diagram shown in Fig. 76, makes use of the tone control switch for the combined functions of tone control, transfer to manual tuning and release of AFC while in the manual tuning position. It is an eight-position switch. The first four positions provide for motor tuning with four selections of audio tone control, including volume expansion on one of the positions, and audio muting on all positions. The next four positions open the audio muting and motor supply circuits and provide for the same four tone control selections with the tuning controlled manually.

Note 6G

Stromberg-Carlson "Te-Lek-Tor" remote control systems as employed in the 70 series receivers make use of a mechanical clutch for shifting control

from manual to automatic operation. The entire motor drive unit with its controlling commutator is declutched from an extension of the gang tuning condenser shaft by axial movement of the fidelity control knob. In manual tuning the mechanical drag of the motor drive system is removed by this clutching system.

SECTION 7

Audio Silencing During the Automatic Tuning Cycle

In practically all of the mechanical and motor-tuned systems provision is made for silencing or muting the audio system of the receiver as the tuning mechanism is being changed from one station selection to another. This is necessary since, if it were not done, a bedlam of annoying sounds would issue from the receiver as tuning progressively passed intervening broadcast channels. The methods employed from a circuit or electrical operation standpoint may be divided generally into six types:

1. Short circuiting the moving coil of the dynamic speaker or the output transformer primary.
2. Short circuiting the output of the audio diode detector to ground.
3. Grounding to chassis frame of an audio grid whose circuit is normally returned to ground.
4. Grounding the uninverted grid of a phase inverter driving system.
5. Biasing an audio tube to cut off by the application of high negative bias.
6. Applying high negative bias to the RF converter and IF amplifier tubes to reduce the receiver sensitivity.

The methods of accomplishing the muting operation have been varied and will be covered in detail in the following notes.

Note 7A

In the manually operated mechanical dials of the rotary or "telephone" type muting of the audio system is usually accomplished by the use of a metal ring of annular shape insulated from frame ground and connected to the point in the audio system which it is desired to ground. When the plungers are depressed in station selection a flange or other portion of the plunger strikes this ring and holds the ring grounded until the plunger returns to its normal position as the operator's finger is removed from it. Examples of this type of mechanism are to be found in the Fairbanks-Morse, G. H. U., Wells-Gardner and Wilcox-Gay receivers.

Similar types of dial operated muting devices with detail variations are to be found in the Colonial and Philco "Automatic Tuning Dials."

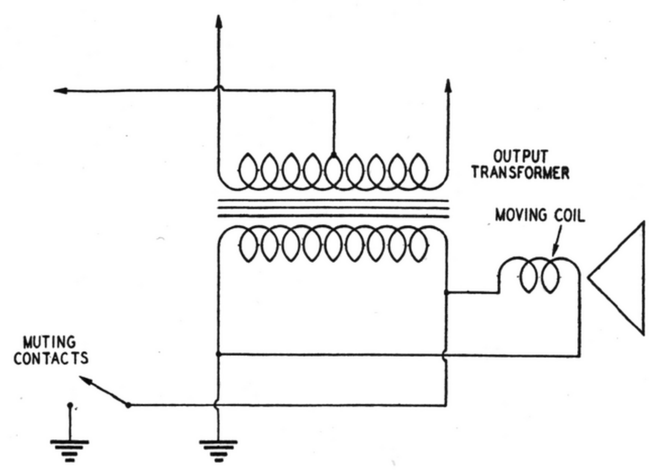

FIG. 77—*Belmont "Belmonitor" Audio Silencing Unit—Circuit*

PHILCO "AUTOMATIC DIAL"—An audio silencing switch is housed within the hub of the automatic station tuning lever. This switch is normally held open by the spring which returns the lever to its unoperated position. In making a station selection the switch closes as the lever is pressed downward upon the desired plunger (see Fig. 8, page 151).

PHILCO "CONE-CENTRIC"—Two muting circuits are connected in series to provide for manual tuning without muting and automatic selection with audio muting by selected position of the tuning lever handle. Within the diecast housing (see Fig. 12, page 152), is an insulated switch operated by axial position of the knob. This switch is connected in series with the contact on the dial disc. If either of these switches are open the receiver audio system is operative. In the manual tuning position of the knob the switch in the housing is open. In the automatic tuning position both switches are closed until the knob is pressed upon the desired cone. As this is done a lever is operated which lifts the contactor from the dial segment.

Note 7B

The Belmont lever actuated system (see page 147), accomplishes audio silencing during tune by short circuit of the speaker moving coil by means of contacts actuated by the tuning levers (Fig. 77).

Note 7C

The Midwest "Motorized Automatic" models in which the motor drive system is controlled by momentary contact push-buttons without the latching feature are silenced during tune by a pair of contacts on each button which grounds the uninverted driver grids during the tuning cycle as shown in schematic drawing Fig. 76.

Note 7D

The Erla "Flash Tuning Dial" carries a pair of contacts on a moving dial arm which light an indicator light and at the same time return the bias of the RF and IF amplifiers to normal. During the tun-

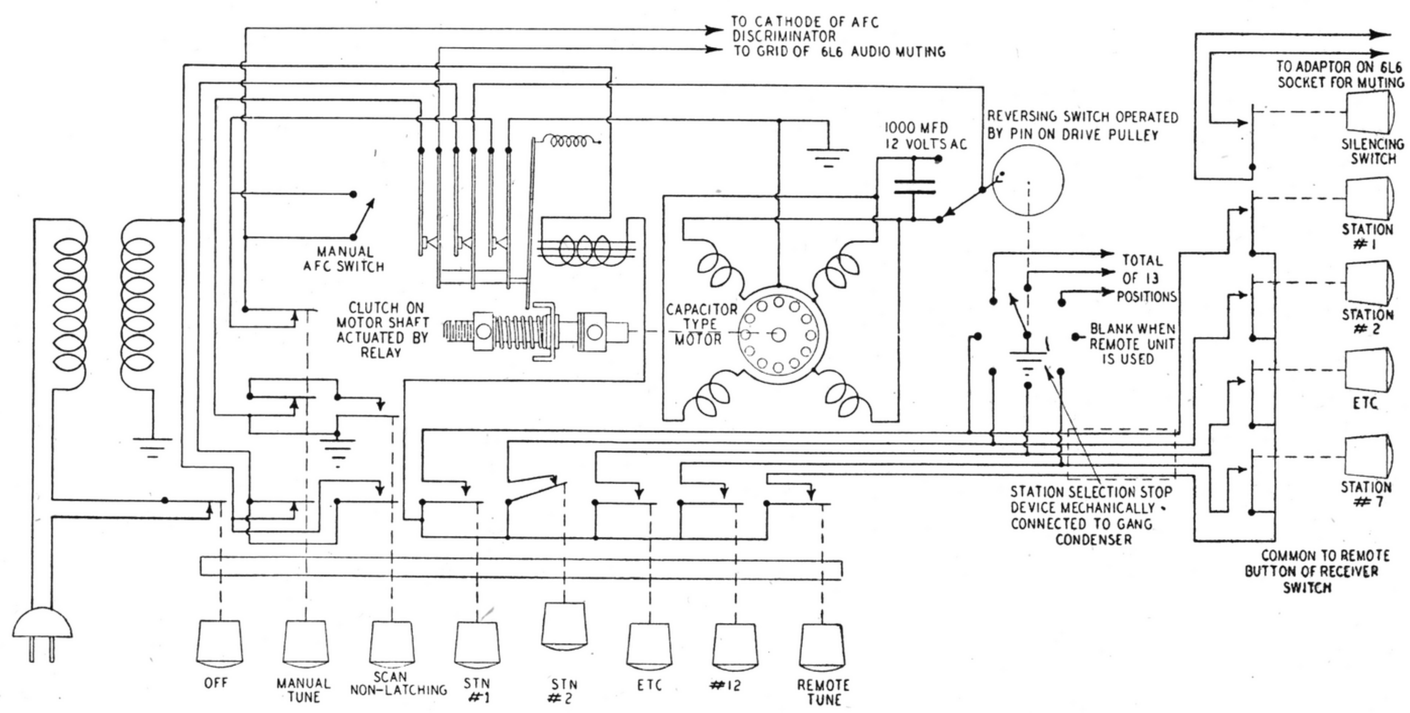

FIG. 78—*General Electric Motor-Driven "Touch-Tuning"—Circuit Diagram*

ing cycle these amplifiers have been subjected to high negative bias which renders them inoperative (Fig. 67).

Note 7E

In a number of receivers the audio silencing or muting is accomplished by the use of a magnetic relay. This is of advantage from a design standpoint when it is desired to perform the muting at a remote point as in automobile receivers or when muting is removed as a pair of contacts or circuits close rather than open. Receivers of Galvin, Noblitt-Sparks and General Electric employ muting relays.

GALVIN MOTOROLA "PRESS-BUTTON TUNING"—Fig. 20 shows the use of a relay whose contacts are connected in parallel with the speaker moving coil. The contacts are closed whenever the tuning motor is running since the relay is operated by a voltage drop across the motor armature. This circuit eliminates the necessity of extra wires in the cable between the receiver and the push-button switch.

NOBLITT-SPARKS — The Noblitt-Sparks schematic diagram Fig. 60 illustrates the use of a closed circuit to hold a muting relay circuit open. When using the automatic tuning feature, with the transfer switch on position "A," a circuit is established through the muting relay, and the selected station dial light when the movable contact on the dial (see Fig. 14) reaches the desired fixed contact. When this occurs the muting relay opens the circuit which has been silencing the audio system. With the transfer switch in position "M" for manual tune a circuit is established through the contacts of the switch and a resistor of the same value as one of the indicator lamps. This circuit continues to hold the muting relay open as long as the receiver is being used for conventional manual tuning.

GENERAL ELECTRIC—In the General Electric "Touch Tuning" motor-driven models a relay is made to serve as a control element for a number of functions. One of these is the release of audio muting as shown in Fig. 78. The details of this circuit are described on page 179.

Note 7F

In Bosch and Westinghouse models employing motor-driven electric tuning, muting is accomplished by a pair of contacts associated with a moving latch which locks on a station plunger pin. The circuit is unusual in that muting is secured by biasing the converter tube to a condition of non-operation. Muting is removed by shorting the resistor whose drop is furnishing this bias. The Stromberg-Carlson "Flash Tuning" models also employ muting contacts operating within the latch gate. (See Fig. 65.)

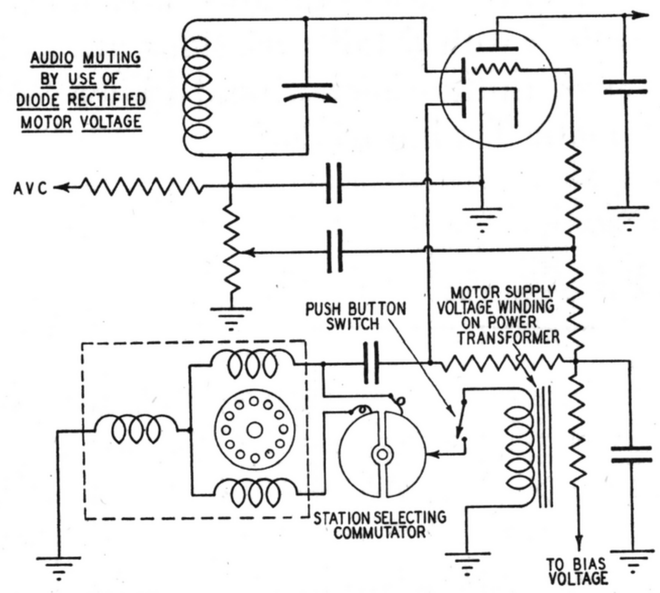

FIG. 79—*Detrola Audio Silencing Unit—Circuit Diagram*

priate resistor network. In this manner as long as the motor is running the receiver output will be silenced. The instant that the motor stops, as controlled by the selecting commutator, the audio bias returns to normal and the receiver is once more operative. Examples of the use of this circuit are to be found in the receivers of Crosley, Detrola, and Galvin. Typical circuits are found in schematic diagrams, Figs. 79 and 80. The former illustrates the use of what would normally be an unused diode plate to furnish a voltage with which to bias to cut-off the grid section of a high mu. diode-triode. Fig. 80 shows a further extension of the use of rectified motor voltage since in this case the RF and IF amplifier is rendered inoperative by high bias as well as the audio system. Thus during the tuning cycle the automatic frequency control system does not function due to absence of signal and is allowed to regain control when the amplifier once more becomes sensitive as the bias returns to normal.

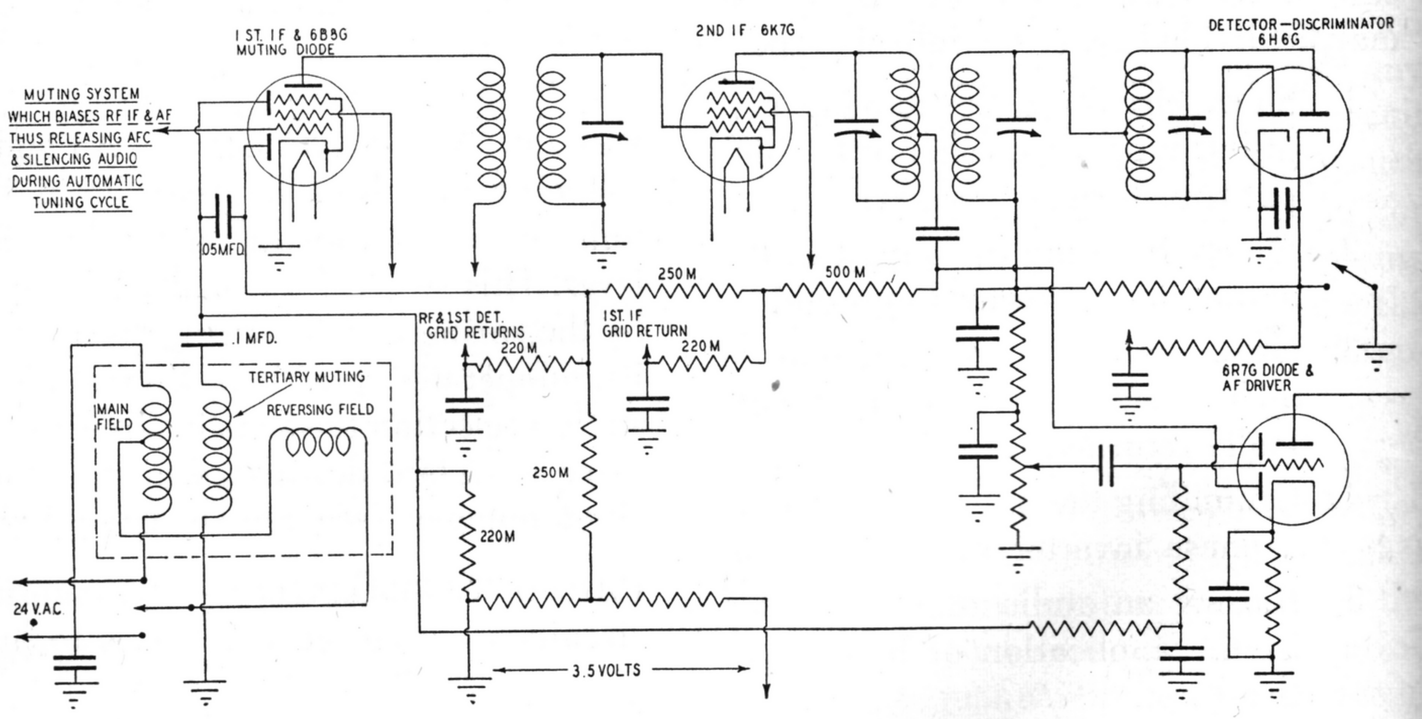

FIG. 80—*Galvin (Motorola) Audio Silencing—Circuit Diagram*

Note 7G

An effective and ingenious method of securing audio silencing in receivers employing low voltage A.C. tuning motors is by the rectification of the motor voltage to furnish a D.C. bias voltage with which to cut off the plate current of an audio tube. The voltage drop across the motor winding or across an auxiliary winding coupled to the motor field is applied to a diode plate and the resulting rectified voltage drop fed to a tube in the audio system through an appro-

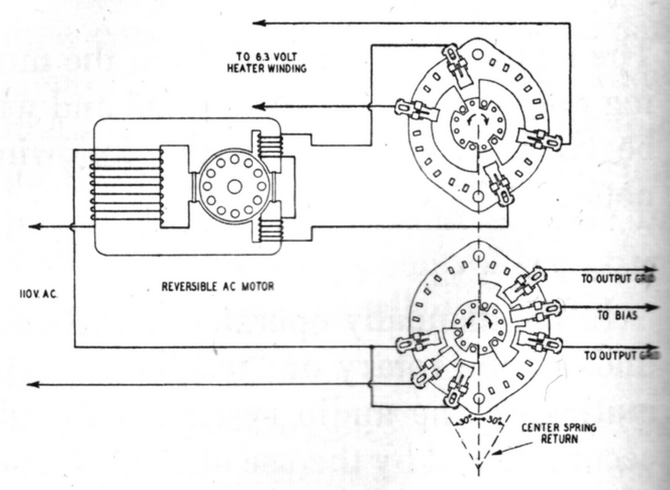

FIG. 81—*Zenith Electric Automatic Tuning Wiring Diagram*

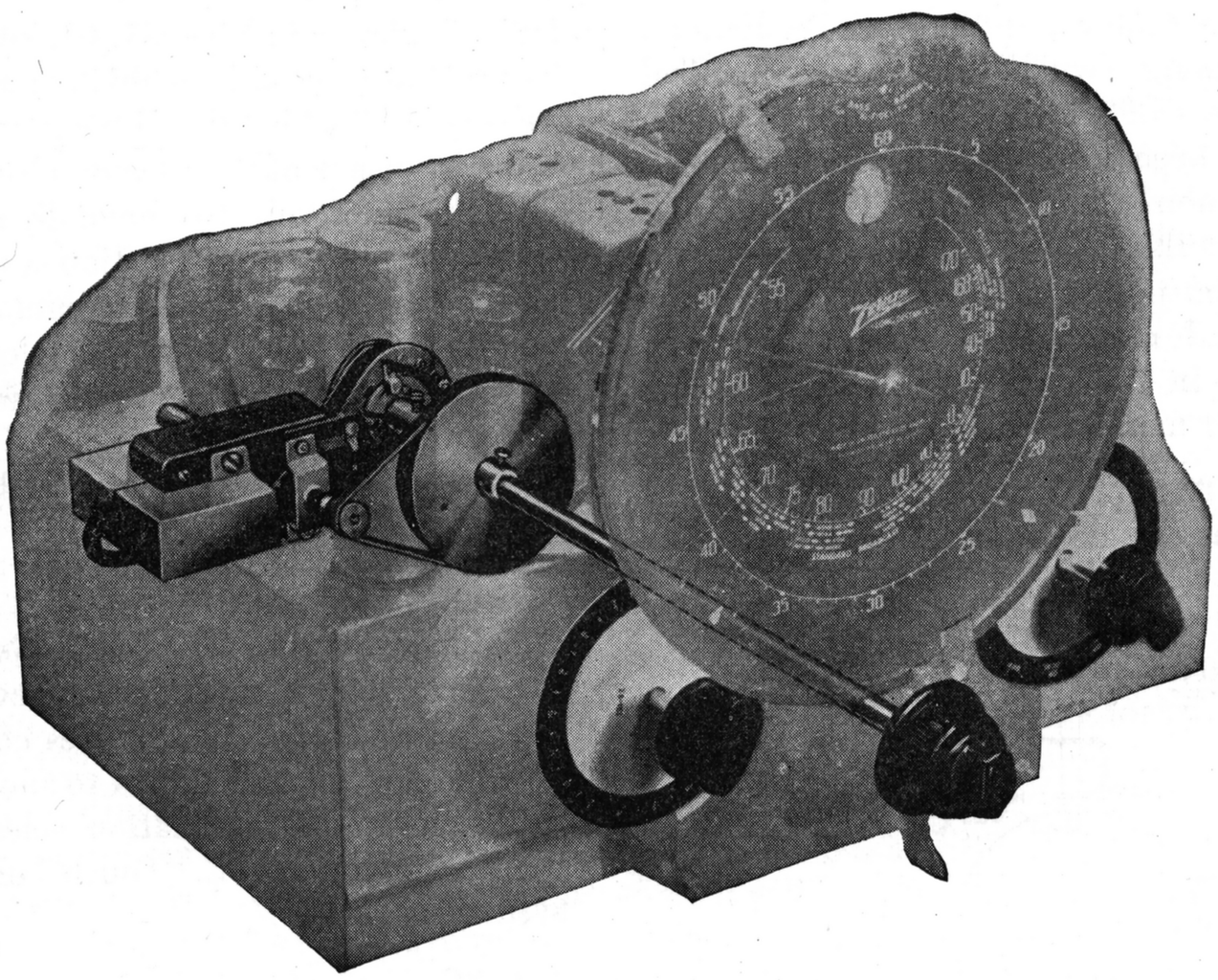

FIG. 82—*Zenith Motor Drive—Phantom View*

Note 7H

One of the earliest methods of silencing the audio system of motor-driven sets was the use of jack spring switches operated by axial movement of the motor shaft. This action has been explained in the short description of the operation of a typical motor-driven system on page 160, and will be illustrated in the section on motors. Figs. 31, 61, and 75, pages 161, 173, and 178, illustrate the action of this type of switch.

Note 7J

The scanning system of rapid tuning employing electric motor drive to be found in Zenith "Electric Automatic Tuning" models is accompanied by the silencing of the audio system with a group of contacts on the center return spring switch which controls the motor. These contacts short the input to the audio grids during the tuning cycle as shown in Figs. 81 and 82.

Note 7K

Automatic Frequency Control Release During Tune

As has been frequently mentioned in preceding sections practically all automatic tuning systems employ the automatic frequency control principle. It has been the use of this principle which has made selected station automatic control possible. A description of the operation of automatic frequency control will be found in section 11 of this book. The necessity for providing some means of rendering the AFC system inoperative during the automatic tuning cycle is obvious from a consideration of its action as the tuning knob is moved. Depending on the width of control as determined by the design of the discriminator system a strong local station will continue to hold the AFC for a few channels beyond its point of tune, thus preventing the system to "lock" on the stations of any of the intervening channels. This makes it necessary either to remove AFC action during the automatic tuning cycle or to remove it for an instant as tune is established on a desired station. It is also desirable to render the AFC system inoperative during manual tuning for the same reason. In general four methods have been applied to accomplish AFC release.

Note 7K1

In the mechanically operated manual types and in a few of the motor-driven types, which make use of the latch gate principle of stopping the motion by locking, on a plunger controlled pin, use has been made of this latch gate to control a switch whose function is to short to ground the AFC voltage for an instant before the pin locks in the gate. This type of action is possible since the sides of the gate move inward under the pressure of the pin and return to their normal positions to constitute a lock when the pin has passed the edge of the gate. Figs. 8 and 15, pages 151 and 153, will serve to illustrate this action. This switch attached to the latch gate is often connected in parallel with contacts on the transfer switch so that AFC action may be removed when manual control of tuning is desired. Such a connection is shown in Figs. 58 and 70, pages 172 and 176. In the Stromberg-Carlson "Flash Tuning" models removal of AFC is accomplished by a mechanical link of the transfer control to the latch gate switch as shown in Fig. 15, page 153.

Note 7K2

The use of high negative bias on amplifier tubes to render the receiver insensitive during the automatic tuning cycle is described in Notes 7D and 7G. This accomplishes the desired result since the signal voltage at the discriminator is below the threshold of action even for strong local signals. Bias is returned to normal at the completion of the tuning cycle. Fig. 67, page 175, and Fig. 80, page 180, illustrate this action.

Note 7K3

Relay contacts control the AFC circuits in the General Electric motor-driven "Touch Tuning" receivers. See description, page 184.

Note 7K4

AFC circuit control by movement of the motor drive shaft has been mentioned in the description of the motor-driven system on page 159 as well as in Note 7H. Illustrations of such a switch are found in Fig. 31, page 161, Fig. 61, page 173, and Fig. 75, page 178.

SECTION 8

Station Selecting Commutator Devices

The motor-driven models which make use of electrical push-button switches all have some type of selective device driven by the gang condenser for the purpose of stopping the motor system at the correct point for station tune. With the exception of General Electric "Touch Tuning" these devices open the motor circuit to stop the tuning operation. The General Electric system is different in this regard since a contact is made

rather than broken to cause the system to stop. This is described on page 184.

In general these electrical station stop devices may be divided in two classes:

1. A single-pole type which does not select direction of rotation of the motor and may therefore run to one end of the tuning range and throw a reversing switch before stopping on the desired station. 2. A single-pole double-throw type which by its position determines the correct direction of rotation of the tuning motor and therefore requires no reversing switch. Several mechanical designs of widely different appearance have been developed, of which the most common is the split ring type although the multiple disc type as described in the introduction in connection with a typical motor-tuned system has been used in the receivers of some of the larger manufacturers.

Note 8A

The single-grounded disc selecting device is shown in Figs. 31, 61, and 83. As previously described this commutator is set by locking the disc against rotation by means of the selector adjusting key while the receiver is manually tuned to the desired station. Friction washers between the discs allow the commutator to rotate while the disc remains locked. After the adjusting pin is withdrawn the disc will remain in correct relative position to the shaft by which it is driven through the friction discs.

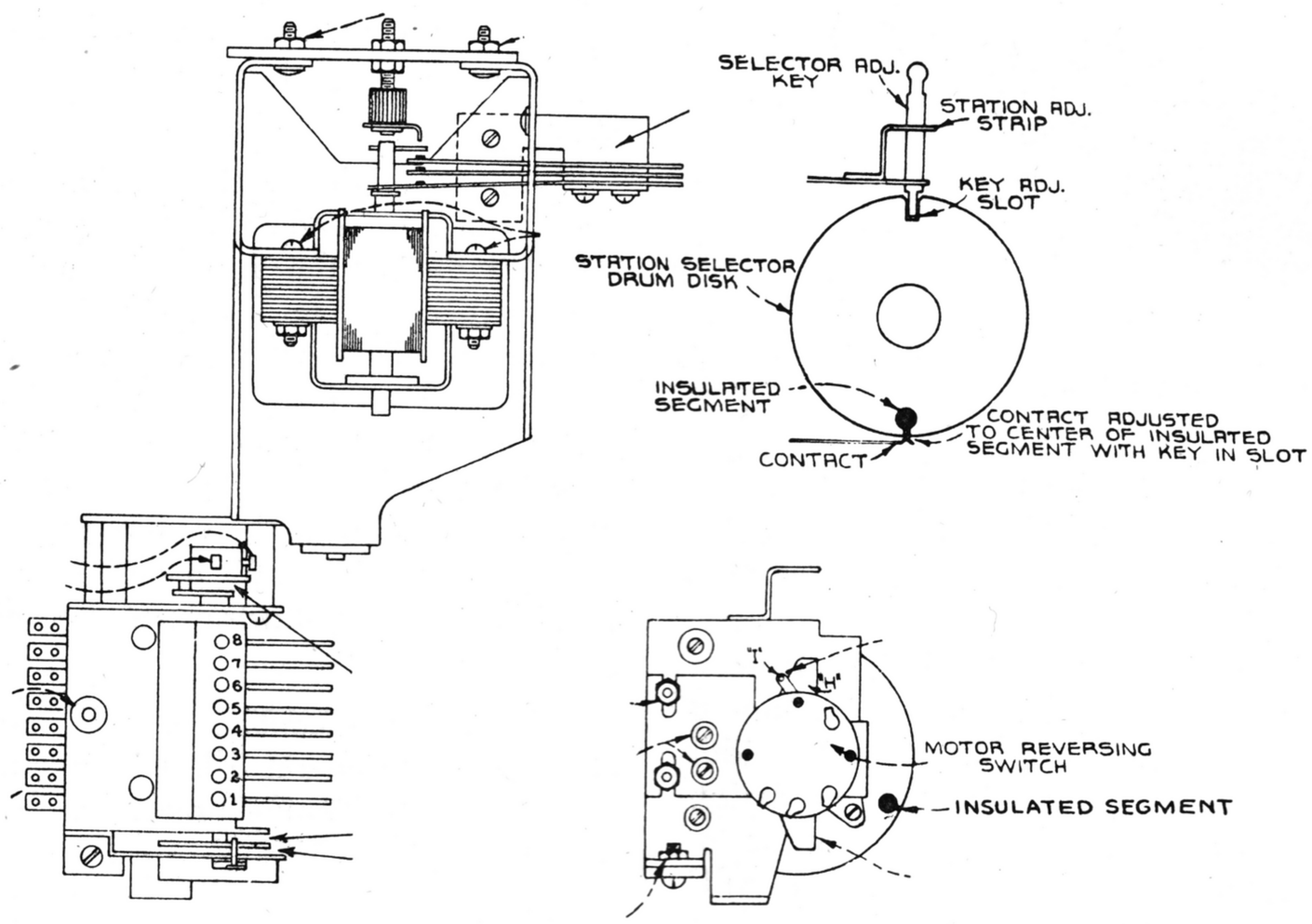

FIG. 83—*R.C.A. Motor and Commutator Details*

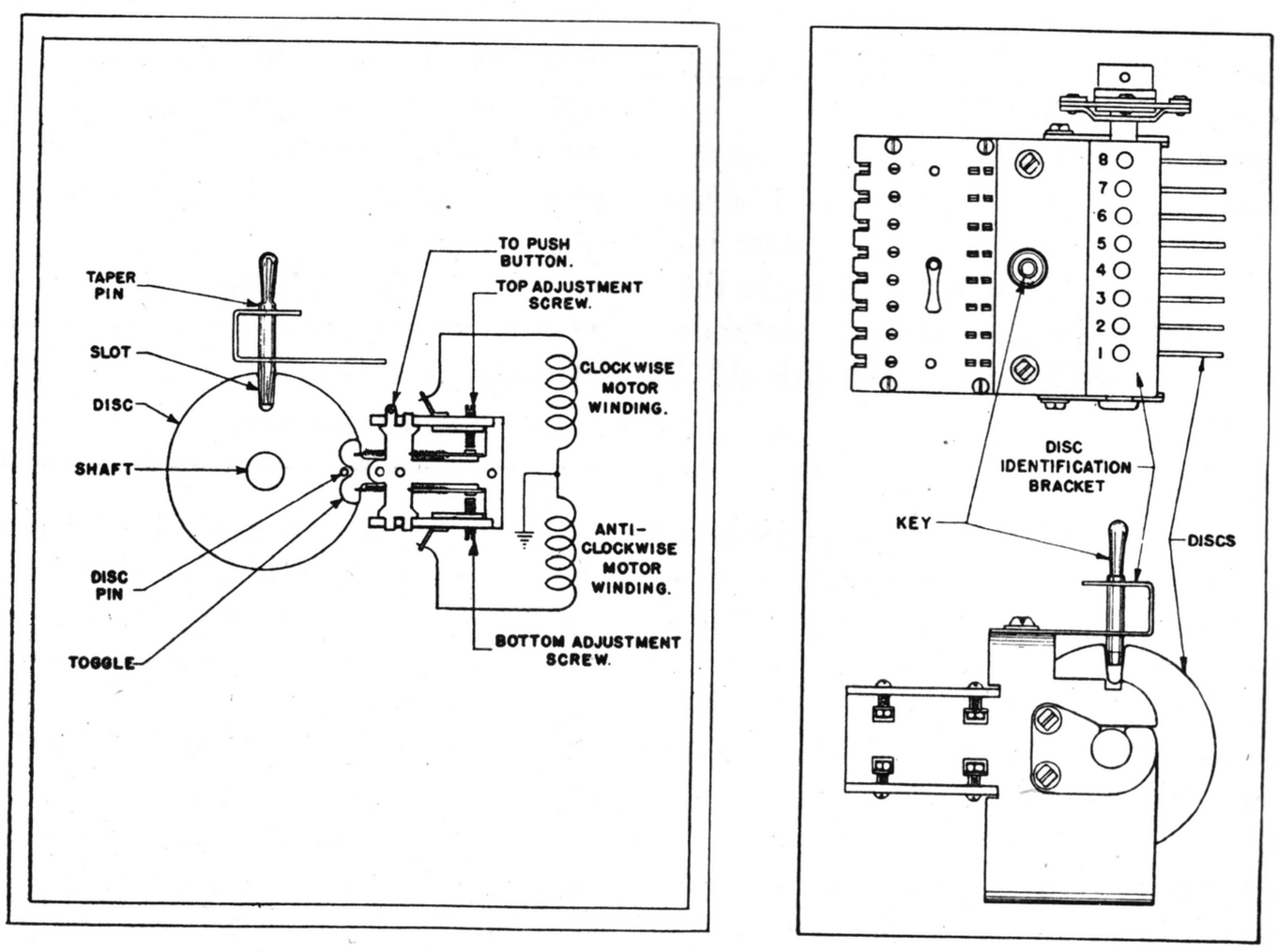

FIG. 84—*Crosley "Prestotune" Commutator Details*

Note 8B

As previously mentioned the General Electric commutating device reverses the usual procedure and makes contact of a moving grounded arm to movable insulated points for station selection. See description of G.E. "Touch Tuning" system, page 184.

Note 8C

The split disc commutator may be considered as a single-pole double-throw switch. The single pole is the selected contact point which can rest upon either one of two rings or discs or upon an insulated break between them. The motor will start to run in such a direction as to move the disc or ring towards the break. Figs. 59, 75, 76, 46, illustrate this principle. An interesting phenomenon occurs in some of these sets as the break reaches the selected contact: inertia of the system may cause over-drive past the insulated break so that contact is established with the other disc or ring. This causes the motor to start in the opposite direction and several oscillations of motion may occur about the position of the insulated break. The accuracy of this type of commutator depends upon the width of the break, speed of the system and shape of the contact.

An interesting feature has been added to a number of the receivers employing this type of commutator in the form of an indicating light for assistance of correct station set-up. The Detrola, Gilfillan and Radio Products receivers employ this light. Since the circuit connections for the operation of this light differ slightly in the models of these companies an individual brief description follows.

DETROLA—The Detrola tuning system employs a selector drum type of mechanism in which the two rings mentioned take the form of half cylinders and the contacts are pins which may be shifted

around the periphery of these cylinders in two parallel slots. This arrangement allows two stations on adjacent channels to be selected by using pins on the separate slots for the desired stations. A lamp is connected between the ground and a flexible lead which may be held upon the selector pin being adjusted. While it is so held the station is accurately tuned manually and the pin moved until the light is extinguished. This indicates that the pin is resting on the insulated section of the commutator which is the correct point for automatic operation when selecting that station.

GILFILLAN BROS.—Reference to Fig. 59, page 172, will illustrate the operation of the adjustment light in connection with the commutator setting. A switch at the point marked X is provided to connect the light with its protective resistor between the common bus and the frame. With the transfer switch in the manual-sharp position, a station is tuned in by means of the usual manual tuning drive. The contactor point closest to the break is chosen for this station and with the indicator light switch closed and the station selector switch button latched in place, this selector point is moved until the light is extinguished. Suppose that the station desired was placed on button number 4 (Fig. 59). It will be noted that when number 4 button is locked in place, the circuit from the 24-volt source, tuning motor, commutator, and resistor light to ground is broken at the commutator. The resistor and light reduces the current sufficiently so that there is no tendency of the motor to rotate while this adjustment is being made.

RADIO PRODUCTS—In adjusting the Radio Products Admiral "Touch-O-Matic" system illustrated in Fig. 75, the following sequence is observed: The "off" button and the desired station button are simultaneously locked in. Under these conditions the automatic tuning indicator light is connected in series with the voltage supply to the motor from a 6-volt tap on the 24-volt supply winding. The voltage supply to the motor through the indicator light is insufficient to permit rotation of the motor, and the receiver may be controlled manually. If, when adjusted for exact resonance with the desired station, the indicator lamp is extinguished this indicates that the required contactor is resting on the insulated break of the station selecting commutator. If this is not the case and the light still glows, adjustment of the position of the contact point on the commutator can readily be made. A check of the correctness of commutator setting can be obtained at any time by locking in the required button and the "off" button. During the adjustment cycle described above the automatic frequency control system has been rendered inoperative by contacts controlled by the "off" button.

Note 8D

The Crosley "Prestotune" household receivers and Chevrolet motor car radio sets employ a combination of disc and toggle switch action as illustrated in Figs. 44, 84, and 85. Referring to Fig. 84 it will be noted that the discs are similar as regards station set-up to the type described in Note 8A. It will be noted, however, that instead of an insulated break, the disc itself carries no electrical connection, but has a pin fastened to its periphery which engages a toggle. This toggle throws a single-pole double-throw switch in one direction or the other, depending on the direction of motion of the disc. As the station is selected and the discs all start to rotate the pins of the unwanted station discs will throw their respective toggles as they pass them, in such a direction that when they are subsequently chosen the switches will have been thrown in the proper manner to start rotation towards the desired station. It will be noted that adjustment screws are provided to limit the throw of the toggle switch. Careful adjustment of these screws makes it possible for the spacing of contacts to compensate for back-lash of the driving system. In the Chevrolet commutator shown in Fig. 85 the contact arm and toggle are combined in one "T"-shaped piece. A screw at each position permits adjustment of the angular width of the break.

SECTION 9

Special Description of Receivers Not Included In General Outline

Certain receivers differ in so many respects from those listed and described in the various preceding sections that it appeared advisable to describe their operation separately. These include the General Electric motor-driven "Touch Tuning" system, the Stewart-Warner "Magic Keyboard," the Wells-Gardner "Electric Drive," Buick Sonomatic, Emerson Instamatic, Hudson Feathertouch Tuner, Motorola Electric Automatic Tuner, Flash Tuning, and Packard 333915.

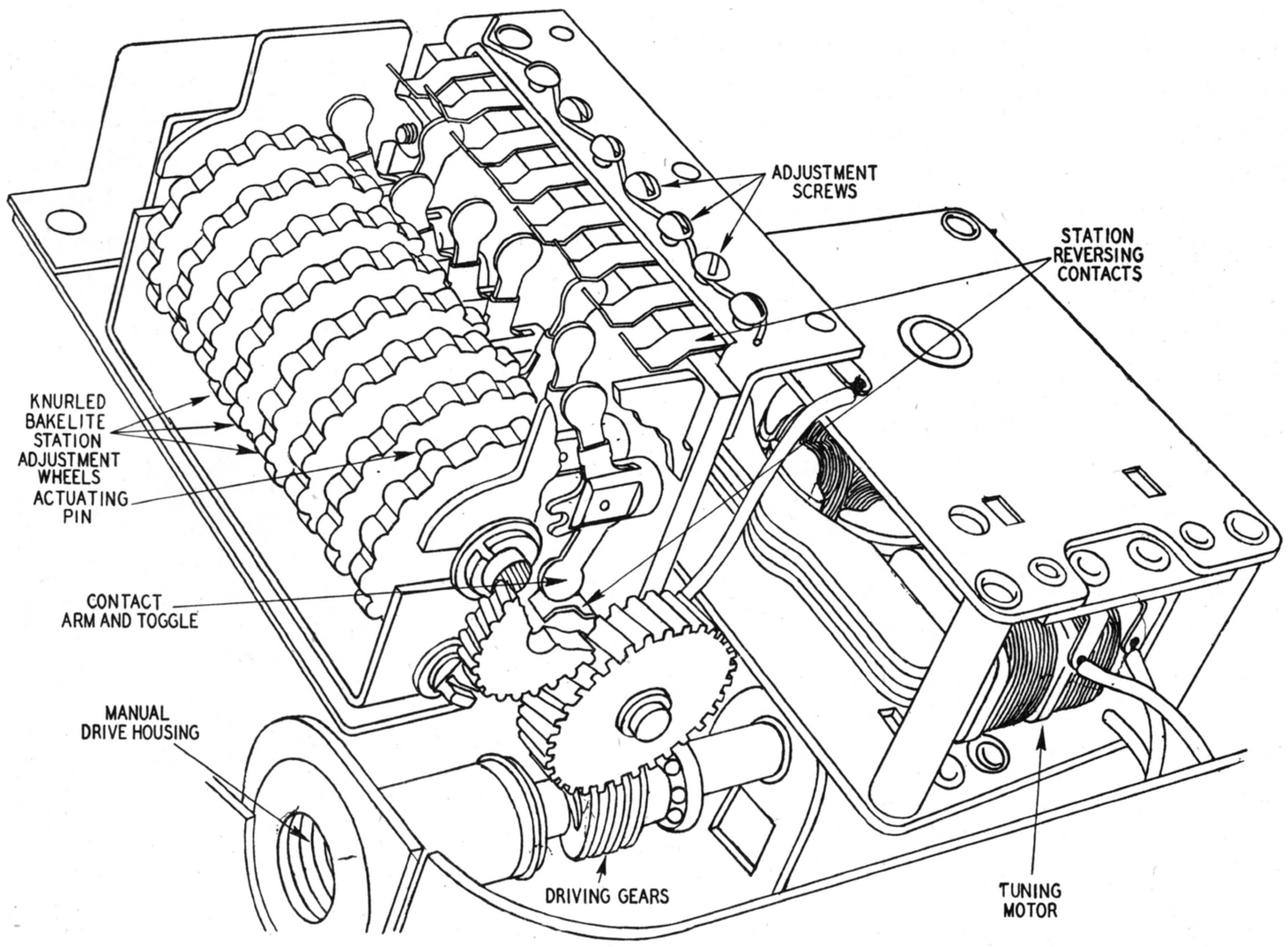

FIG. 85—*Chevrolet Station Selecting Commutator*

SECTION 9A

General Electric Motor Operated "Touch Tuner"

The General Electric "Touch Tuning" system involves the application of so many features not found in the other receivers described that a complete explanation of the operation of the system has been reserved for special consideration. Some of the individual components have been mentioned briefly in the sections devoted to them with reference to this note.

Sixteen push-buttons in a latching type switch control the operation with provision for an eight-button remote unit as an additional accessory if desired.

Of these sixteen buttons, thirteen are used for station selection, one for scanning, one for transfer to manual operation, and the last to turn the receiver off.

Referring to schematic diagram 78 it will be noted that the off button controls an A.C. line switch. This turns the receiver on whenever any of the other buttons of the switch are pressed since the line switch is in its "on" position when its plunger is released or out. To turn the receiver off it is merely necessary to press this button.

The heart of the control system is a combination relay and mechanical stop. This is shown at the center of the diagram. The armature of this relay engages a two-fingered friction clutch which acts as the connecting link between the split phase capacitor type motor and the gang condenser driving system. When the relay closes the end of the armature causes an instant stop of the drive system in addition to opening three circuits by means of contacts on six jack springs as shown.

The first pair of contacts control the release of automatic frequency control, the second pair of contacts control the motor current and the remaining pair of contacts control the audio silencing circuit.

The relay winding is energized when the station commutator on the gang condenser shaft makes contact with the adjustable contact pin to which the desired station button is connected.

Pressing the manual button releases any depressed button. Thus the relay coil circuit is opened and the relay field coil cannot be energized. When the manual button is locked in, the motor circuit is open, and the grounding of output grids and AFC circuit removed. This allows a separate manual AFC switch to be used at will when the manual button is in.

With the receiver set for manual operation depression of the scan button closes the motor circuit by shunting the open motor contacts of the manual switch allowing continuous motor operation and dial travel. As the motor drives to the limits of the dial on either end, the reversing switch operating at the end of travel is automatically thrown, causing reversal of motor rotation. Since the scan button is non-latching, it does not unlock the manual tune button as it is depressed. The audio system is silenced by a pair of contacts on the scan button which avoids reception of unwanted stations or inter-station noise when this button is used.

Since the system stops on contact, the connection of the remote control unit is somewhat different than in systems of the open circuit type. One of the receiver station selector buttons is chosen as the remote tune transfer button. The remote tune switch is connected with the lead which would normally run from this button to the commutator now serving the purpose of a common connection in the remote switch. In this way the remote button serves to connect the remote switches to the relay coil and allow parallel operation of seven positions at the remote point with any seven selections at the receiver. The eighth button at the remote point is used to silence the receiver whenever desired for such occasions as answering the phone.

SECTION 9B

Stewart-Warner "Magic Keyboard"

This mechanism combines mechanical and electrical features to produce a system requiring no transfer means to change from manual to automatic tuning other than the act of turning the tuning knob for manual operation or depressing a button for automatic operation. An additional feature not found in other systems is the dual use of the tuning knob for mechanically unlocking the station set-up cams.

Fig. 86 is a photograph of the "Magic Keyboard" unit.

The Mystic Mechanism with the Magic Keyboard is an electrically driven device for automatically tuning the receiver to any one of fifteen preselected frequencies. The receiver can be tuned either automatically or manually without the need of turning a switch.

The operating mechanism of this tuning device consists of fifteen sets each of keys; station selector cams and pawls. In addition it has two multi-contact control switches.

The back switch, mounted on the rear of the tuner, has four sets of contacts. From front to rear, they are:

1. *Reversing:* for reversing the direction of motor rotation.
2. *Power:* for opening and closing the motor power supply line.
3. *Mute:* for killing the audio system to prevent noises during automatic tuning.
4. *AFC:* for cutting out AFC during automatic tuning.

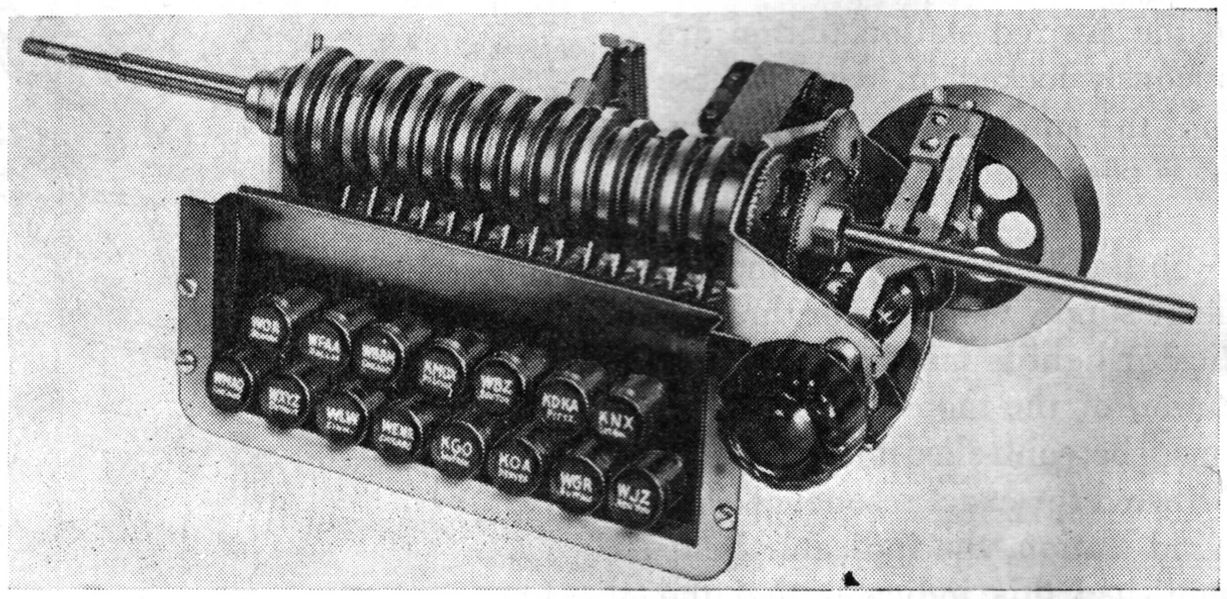

FIG. 86—*Stewart-Warner "Magic Keyboard"*

The side switch, mounted on the right end of the tuner, has two sets of contacts. From the top down, they are:

1. *AFC:* for cutting out AFC during manual tuning and during setting up.
2. *Power:* for opening and closing the motor and automatic light power supply line.

With the tuner in the manual tuning position all switch contacts are in the position shown in Fig. 89. As a button is pressed in, its pawl is pulled against a station selector cam. It will be noted that these cams have two different heights, that is, a high and a low side. If the pawl comes to rest against the high side of the cam, the reversing contacts on the back switch are closed to the front for one direction of motor rotation. If the pawl comes to rest against the low side of the cam, the reversing contacts close to the back for the other direction of motor rotation. The direction of rotation will always be such as to bring the notch on the cam around to the pawl by the shortest route.

Regardless of whether the pawl rests against the high or low side of the station selector cam, the bakelite cam will close the Power, Mute and AFC contacts on the back switch. After these and the reversing contacts have closed, the power contacts on the side switch close and cause the motor to run.

The motor drives the mechanism to the proper position for the desired station. Then the pawl falls into the notch on the selector cam and causes the bakelite cam to set the back switch contacts in new positions. The Power contacts open, shutting off the motor. The Mute contacts open allowing the signal to come in. The AFC contacts open and AFC puts the finishing touch to the automatic tuning operation.

A friction clutch in the gear train, driving the cam shaft, acts as a buffer and absorbs the shock of the sudden stop when the pawl falls into the notch on station selector cam.

During automatic tuning the manual tuning shaft is disengaged by moving the friction roller. This roller is slid away from engagement with a friction wheel as a button is pushed in. The arm that does this, also allows a kickout arm to engage a star wheel. To tune manually, a slight rotary movement of the tuning shaft causes the star wheel to force down the kickout arm. This releases the depressed button and slides back the friction roller into engagement with the friction wheel for manual tuning.

The flywheel on the back end of the tuning shaft provides a "spinner" action while tuning manually.

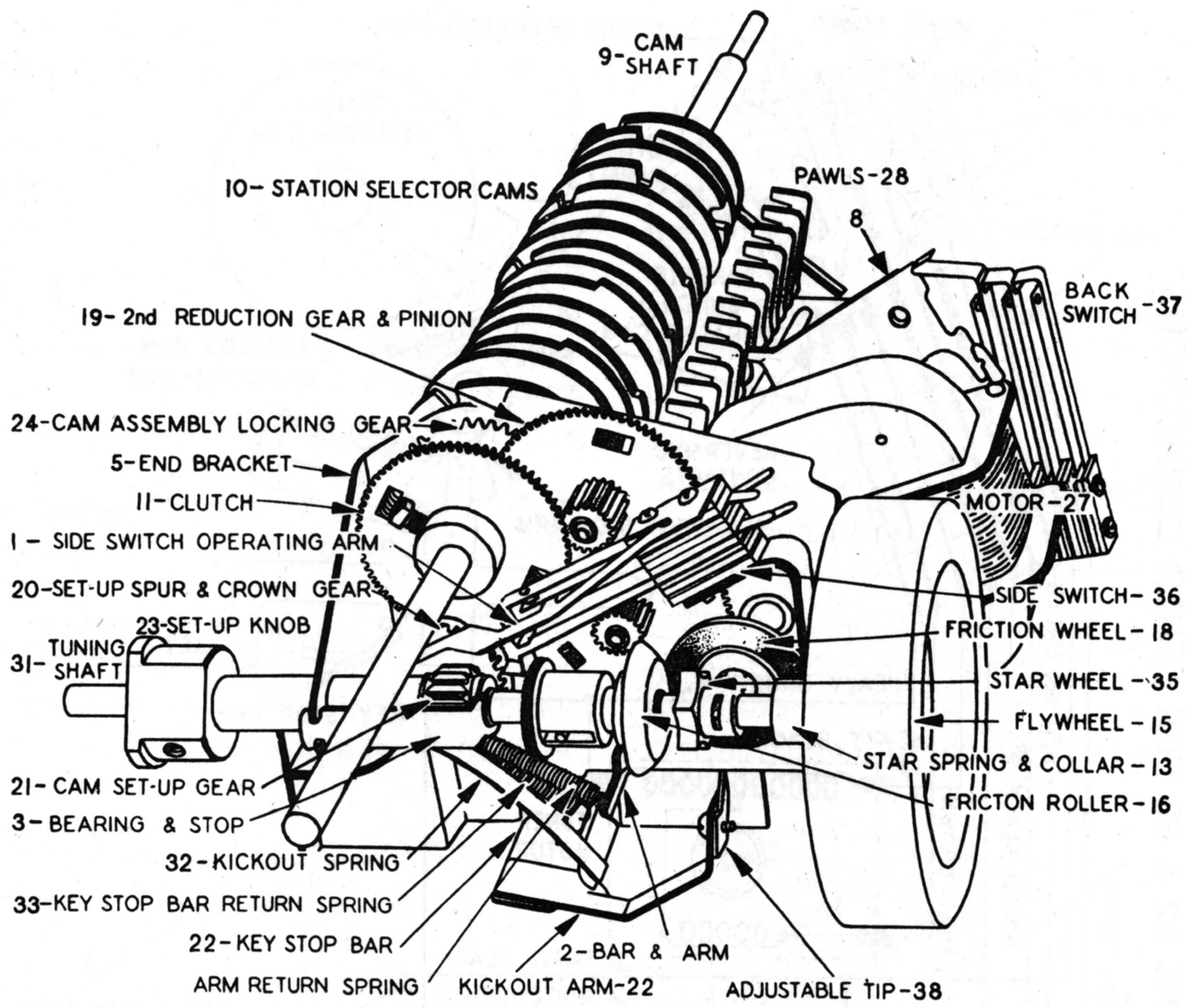

LEFT END VIEW OF MECHANISM

Fig. 87

The station selector cams are prevented from turning on their shaft by an expansion and contraction type locking mechanism. The assembly is locked when the device is expanded or unmeshed as shown in Fig. 90B. Unlocking is accomplished by pulling out the set-up knob and turning it clockwise until a click is heard. This contracts the

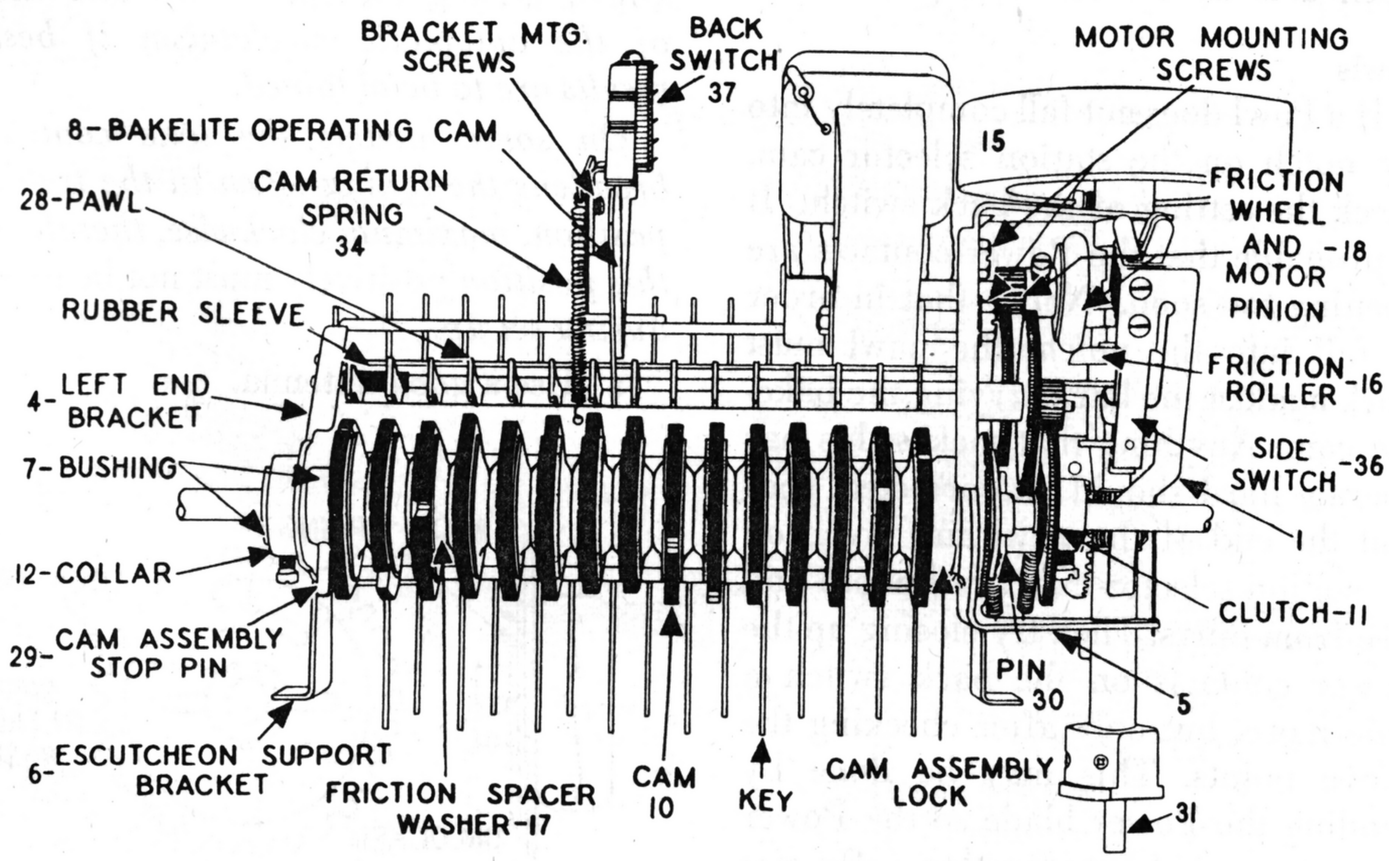

TOP VIEW OF MECHANISM

Fig. 88

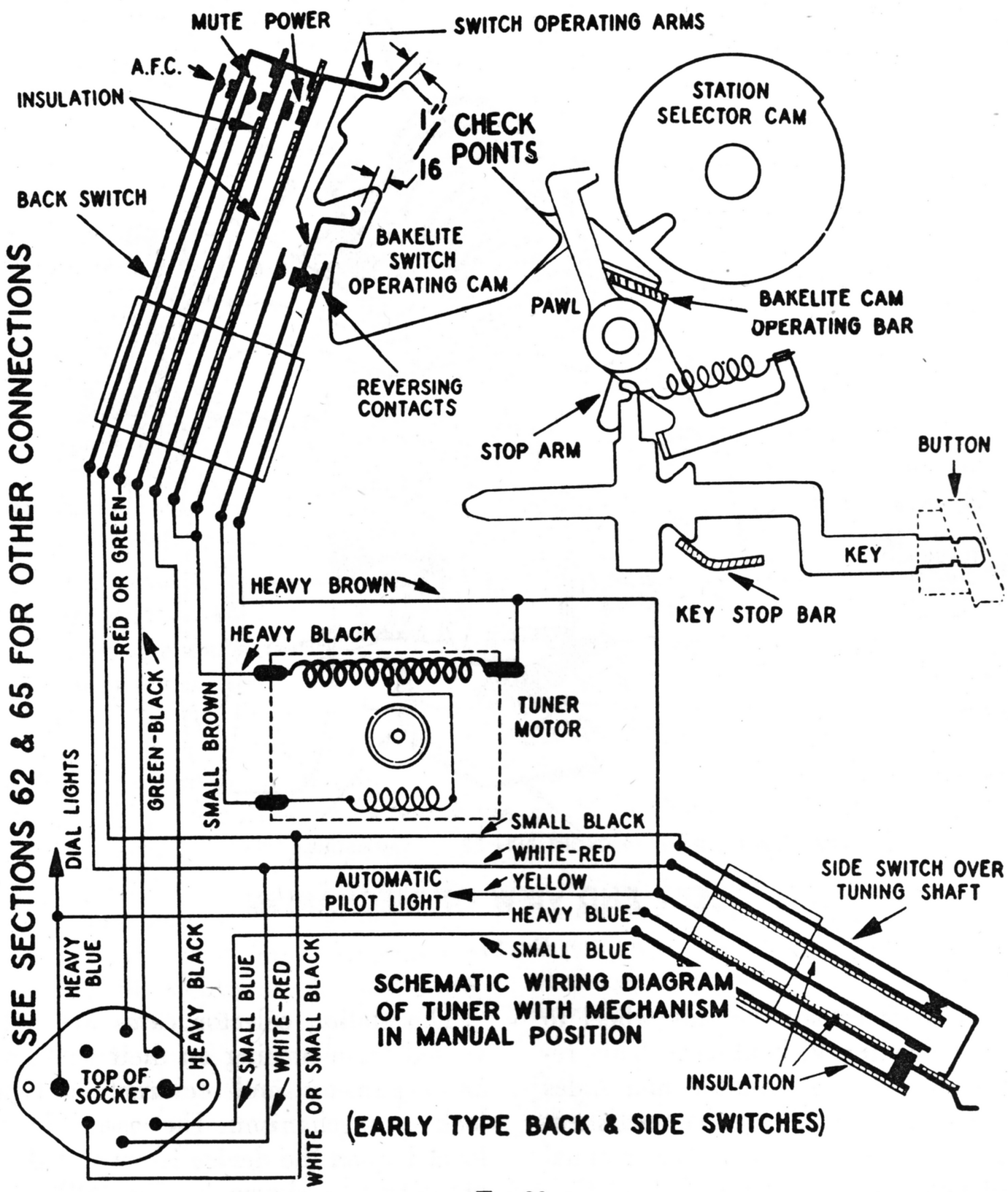

Fig. 89

locking mechanism and allows the selector cams to turn on the shaft for setting up.

Pawls

If a Pawl does not fall completely into the notch on the station selector cam, check the setting of the back switch. It is probable that the Power contacts are opening too soon. Notice that in order to fall into the notch, the pawl must work against the bar carrying the bakelite cam. Anything that makes this bar operate hard should be corrected. See that the end of the pawl and notch on the station selector cam are smooth and free from burrs. Then try closing up the Power contacts on the back switch a little more, but only after checking the above points. This may be done by bending the Power blade so the Power contacts are closer together. *Do not change the outline of the pawl or cam notch.*

Setting Up

The following points must be observed during the setting up and use of the automatic mechanism if best results are to be obtained.

On some models the tone control broadens the tuning when in the treble position, maximum clockwise, therefore this position positively must not be used *during set-up.*

a. Use a *good* antenna.

b. Allow the set to warm up for twenty minutes before setting it up.

c. Set up the buttons from left to right, that is, the right hand buttons should be the last to be set up.

d. Avoid setting buttons on weak or fading signals.

e. Tune carefully when setting up.

f. After a button is set up, do not push that button again until the mechanism is locked. To do so will spoil the setting of that button.

g. Lock up tight. Continue to force the set-up knob in a counter-clockwise direction even after it seems to reach a definite stop. If you do not use force, the settings of the buttons may change.

Setting Up Procedure

In brief, the setting up procedure is as follows:

a. Pull off the tuning knob. This reveals the set-up knob (Fig. 87). Pull the set-up knob out. Unlock the mechanism by turning the set-up knob clockwise until a slight click is heard.

b. Push in a button. After the pointer has stopped moving, grasp the set-up knob and tune in the station to which the button is to be set.

c. Push in another button. After the pointer has stopped moving, again grasp the set-up knob and tune in the station to which this button is to be set.

d. Continue to push in buttons and tune in the stations until as many are set up as desired. Then release the last button set up, by pushing the set-up knob part way in.

e. Pull the set-up knob back out. Lock up the cam assembly by turning the set-up knob counter-clockwise as far as it will go. Continue to force the set-up knob in a counter-clockwise direction even after it seems to reach a definite stop. If you do not use force, the settings of the buttons may change.

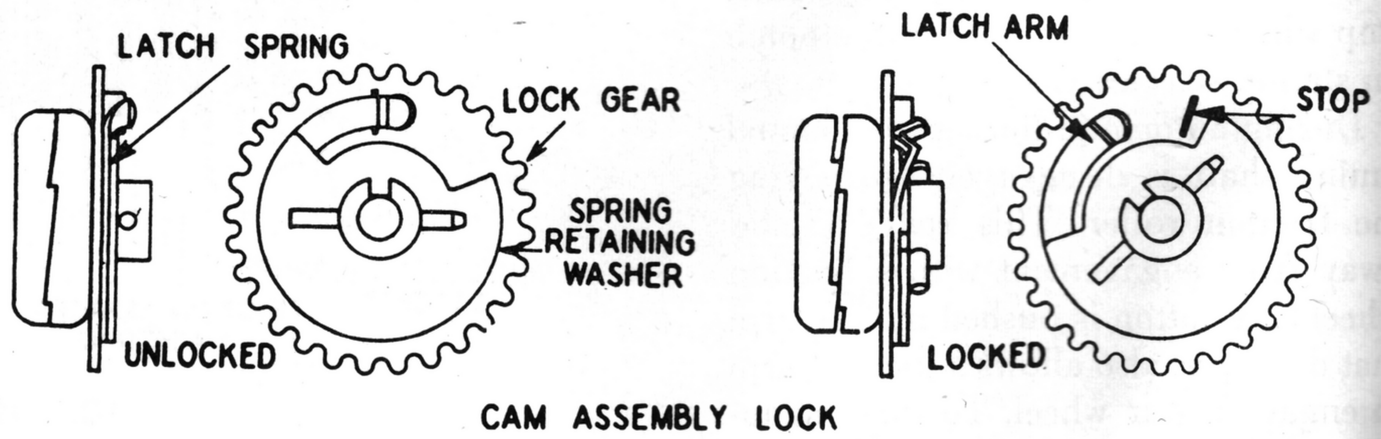

Fig. 90A Fig. 90B

f. Push in the set-up knob and replace the tuning knob.

In case of complaint that a button set for some frequency, does not tune to that point within 10 K.C., or more, after locking up, it usually develops that the station selector cam has inadvertently been moved before it was locked. This may come about by turning the set-up knob slightly when releasing the button, preparatory to locking the mechanism. Another possibility, if the back switch is not adjusted properly, is that by pushing a second button the motor will start before the pawl falls clear of the first cam, thus causing this cam to be shifted slightly before it is locked in place.

A short may occur in the unit due to the tuning shaft bearing stop (Fig. 87) getting out of place. It then catches on the set-up gear. When the gear is turned counter-clockwise it forces the bearing stop against the hot blade of the side switch. Solder the bearing stop in place.

SECTION 9C

Wells-Gardner "Electric Drive"

The Wells-Gardner "Electric Drive" is a combination of mechanical and electrical interlocks which allows station "set-up" from the front of the receiver. The station stop mechanism consists of a series of discs which are geared to the condenser drive system and are encircled by brake shoes having notches which co-operate with stop levers as shown in the sequence of drawings of Fig. 91.

Above each station tuning button is a setting button used only when it is desired to change the pre-set tuning choice. The station tuning buttons are interlocked by means of a side-acting latch in such a manner that the act of depressing a station button will move the latch and release any previously held button. This side-acting latch or locking plate is also actuated by the manual-electric transfer control.

Fig. 91A shows the system of rocker arms and stops in position corresponding to a released plunger. It will be seen that all parts of the stop system are clear of the brake shoe and will allow its free rotation. Fig. 91B shows the tuning button depressed with the stop lever bearing against the outer periphery of the brake shoe. The ball on the end of the switch lever is depressing the switch plunger causing the motor to run. The motor will run the system until the stop lever drops into the notch and allows the switch lever ball to leave the switch, thus stopping the motor with the setting disc firmly locked in place, as shown in Fig. 91C.

Fig. 91D shows the manner in which the setting disc is released from the brake drum to allow it to be set at the correct point for station tune. The station is tuned in manually with the system as shown in Fig. 91D. The brake drum turns freely within the setting disc until it is clamped in place by the cams on the drum release and auxiliary lever, as the setting button is withdrawn. Study of the position of the various parts as shown in Fig. 91 will disclose the sequence of operation.

Audio silencing is obtained by a switch operated by axial movement of the motor shaft.

SECTION 9D

Buick Sonomatic

The push-button tuning mechanism of the Buick Sonomatic Model 980620 is illustrated in Fig. 92. One button is removed to show the lock screw.

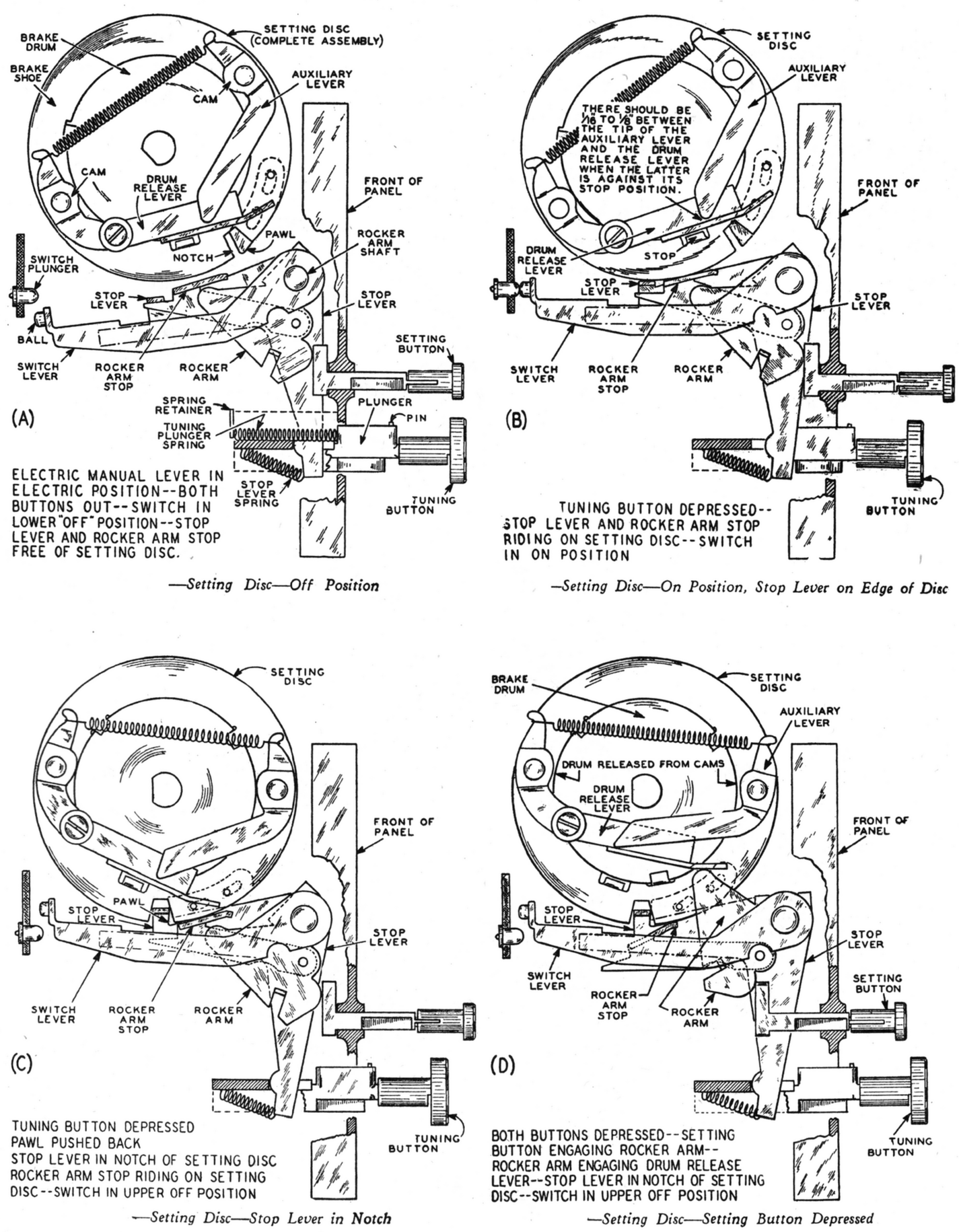

—*Setting Disc—Off Position*

—*Setting Disc—On Position, Stop Lever on Edge of Disc*

—*Setting Disc—Stop Lever in Notch*

—*Setting Disc—Setting Button Depressed*

FIG. 91—*Wells-Gardner "Electric Drive" Details*

It is important that this set be connected to a six-volt battery before any attempt is made to operate the tuner. Magnetic clutch "E" (Fig. 92) must operate to remove the load of the manual tuning system before the push-buttons will operate.

In set-up and operation this tuner is very similar to the rocker bar types. Pushing pawl "F" pushes against the pair of racks "D" to turn pinion "C" to the desired position. Pinion "C" is connected directly to the dial mechanism and geared to the condenser side of the magnetic clutch "E." The switch contacts which operate the clutch are closed by the very slightest touch of a button.

To set up stations on this receiver proceed as follows:

First remove the push-button by pulling the button spring to the right and pulling straight out on the button. Then loosen lock screw "A" with a coin or screwdriver. Carefully tune in the desired station by means of the manual control, then push the loosened screw in as far as possible and re-tighten.

SECTION 9E

Emerson Instamatic

The six push-buttons provide a choice of six favorite broadcast stations for Miracle Instamatic Tuning. Adjustments for any particular station must be made by means of the small cross-slotted button immediately below the chosen push-button. The following procedure must be carefully observed in making these adjustments:

Insert the line plug in the electrical outlet. Turn the receiver on by rotating the tone control knob clockwise until the switch is heard to click and then rotate this knob to the extreme clockwise position. Wait about a minute for the tubes to warm up. Turn the wave-band switch to the broadcast position, clockwise. Turn the volume control clockwise to about half of its full rotation.

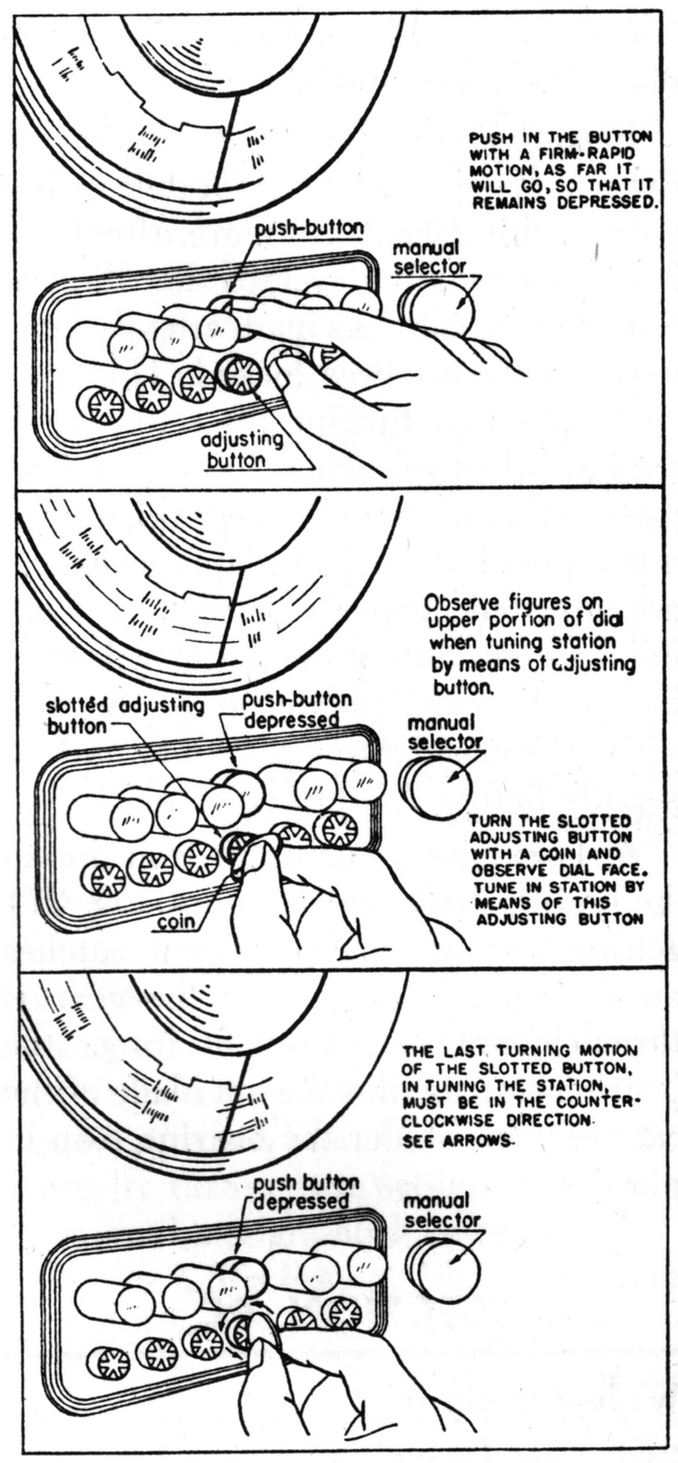

FIG. 93

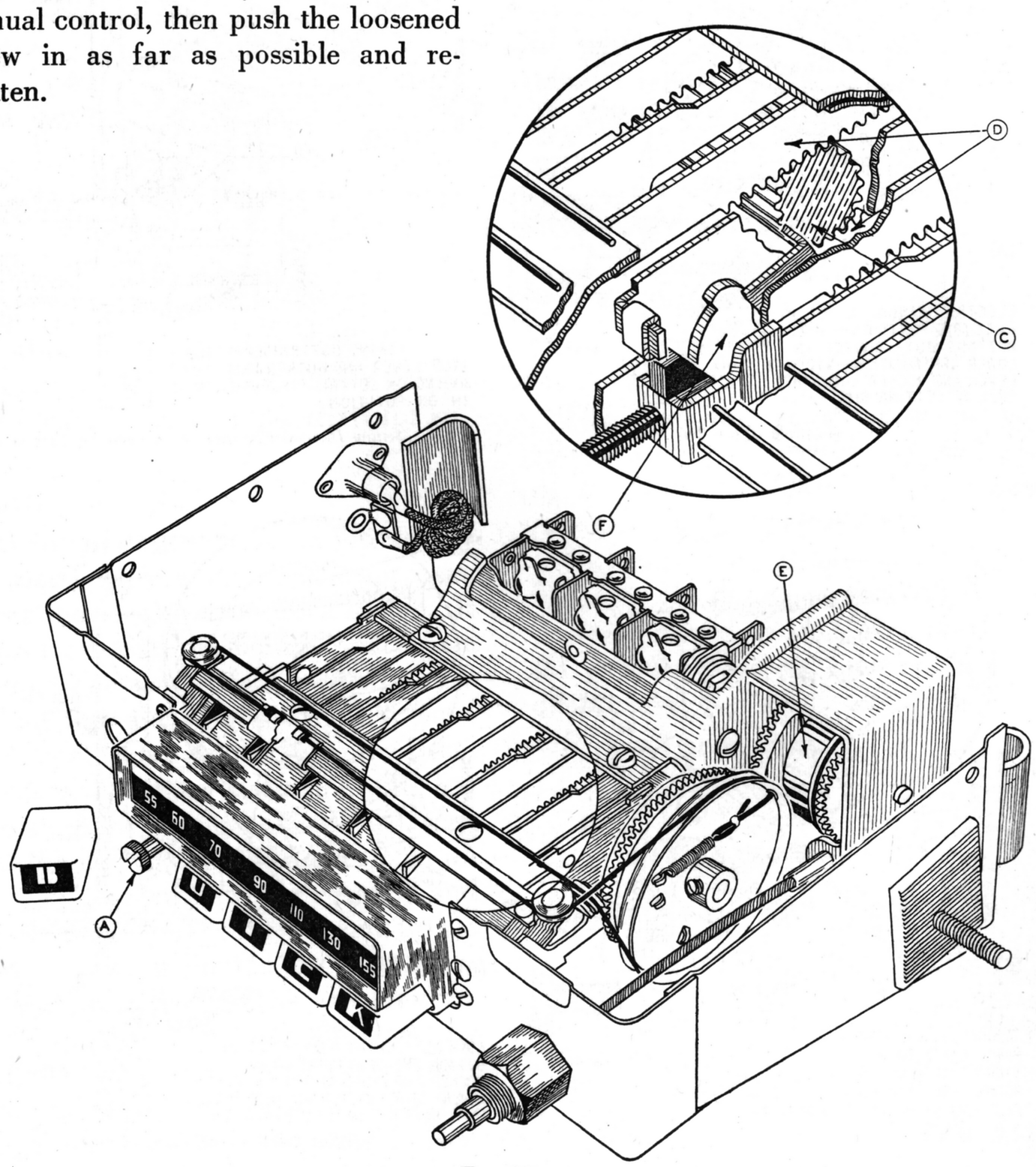

FIG. 92

Push in the manual selector knob (second from right). When pushing in the selector knob or one of the push-buttons best results are obtained by using a firm rapid action.

With the selector knob depressed tune in the desired station. Rotate the selector knob until the mark on the dial face corresponding approximately to the frequency of the station appears at the black indicator line on the conical escutcheon window. Identify the station and note the approximate position of the dial face.

Push in the button to be adjusted for this station. (See Fig. 93.)

Insert a small thin coin in one of the slots of the adjusting button immediately below the push-button. Turn the adjusting button until the mark on the dial face corresponding approximately to the frequency of the station again appears at the black indicator line on the conical escutcheon window. Once the station is heard, tune it in carefully

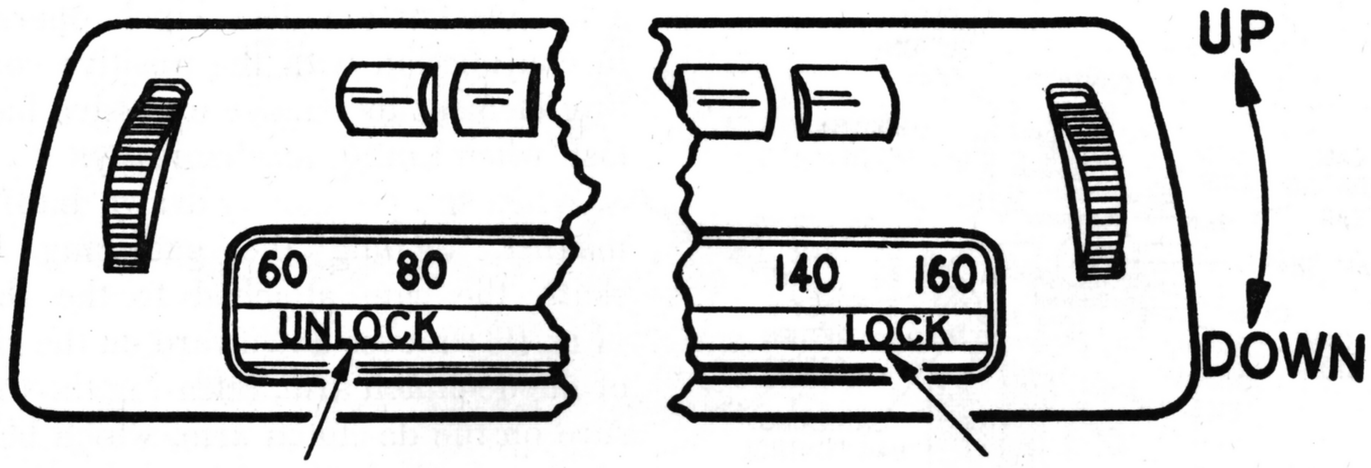

FIG. 94

TO UNLOCK: Turn Manual Tuning Control down about 70 to 100 strokes after word UNLOCK appears. Turn until control turns hard after turning easily. Never force control after this point is reached.

TO LOCK: Turn Manual Tuning Control up about 70 to 100 strokes after word LOCK appears. Turn until control turns hard after turning easily. Never force control after this point is reached.

by turning the adjusting button back and forth slowly. From the standpoint of performance it is of paramount importance to tune in the station accurately. (See Fig. 93.)

It is very important, when tuning in a station by means of the adjusting button, that the last turning motion of the adjusting button be in the counterclockwise direction, as indicated in Fig. 93.

Check the results by moving the dial face, using the selector knob, to a different position and then pushing in the button. The station should be received clearly and with maximum volume.

Adjust the remaining buttons, one at a time, following the procedure outlined above.

SECTION 9F

Hudson Feathertouch Tuner

IMPORTANT PRECAUTION: In order to assure perfect results you must observe all instructions. One very important precaution during set-up is to never touch a button already set while control unit is unlocked. For example, if some buttons are set and while working on the remainder you accidentally touch one already set, the setting on this button will change. This will necessitate resetting of the button accidentally touched.

How to Set Up Push-Buttons

(a) Operate set for about ten minutes before setting up buttons.

(b) *To Unlock Tuning Mechanism:* Rotate right (tuning) control downwards until word *Unlock* shows at the left side of dial. Continue to turn until wheel tightens. (70 to 100 strokes will be required.) A more complete description of this procedure is given below under the heading "Unlocking Tuning Mechanism."

(c) Tune in desired station with (tuning) control.

(d) Hold down the button selected and move tuning control up and down, leaving it in position where tone is deepest. Release button.

(e) Follow same procedure for other buttons. IMPORTANT: After setting any button, it must not be touched until after mechanism has been locked as in (f). Otherwise it is necessary to reset it as in (c) and (d).

(f) *To Lock Tuning Mechanism:* Rotate tuning control upwards until word LOCK appears at right side of dial. Continue to turn until wheel tightens (70 to 100 strokes will be required). A complete description of the locking operation is also given below.

(g) Insert station call letter tab in front of each button. The tabs are inserted by flexing them and allowing them to snap into place in the buttons.

Setting Up Early Radios

Some of the earliest radios produced require a slightly different set-up procedure than given above. This same procedure can be used on later sets though it is not necessary.

After unlocking the tuning mechanism, proceed as follows for each button:

1. Tune station in manually.
2. Now hold the manual tuning control and push the button to be set up *several times.*
3. After pushing and releasing button several times, hold button down and again tune station carefully by turning manual tuning control back and forth slightly.
4. Repeat for other buttons.

The essential difference between this procedure and the one given above is that the button is pushed and released several times in quick succession after desired station is tuned in but before final tuning adjustment is made.

Unlocking Tuning Mechanism

In setting up this mechanism, you must understand the action of the control during locking and unlocking.

The unlocking operation begins *after* the tuning control is turned to the point where the word *unlock* appears. To complete the unlocking operation, the tuning control must be turned quite a bit *after* this point is reached. When unlocking begins, the tuning control may turn quite hard, but then it begins to turn quite easily. You must continue to turn it downwards until it again turns hard. Because of the high gear ratio, it may require 18 to 24 complete turns of the tuning control to reach this point. Since you can turn this control only a quarter of a turn at a time, it may require 70 to 100 strokes of the finger on the control to completely unlock the mechanism. The tuning control will *not* reach a definite stop when the mechanism is unlocked. However, when the control turns easily for quite a while, then turns harder, the unlocked position is reached. In this position the tuning control will spring back when you take your finger off after turning it. At this point, the tuning indicator will function if you turn the tuning control back (up). *Important: When this position is reached, do not force the tuning control further down.*

Locking Tuning Mechanism

The locking action begins when you continue to turn the tuning control upwards after the word *lock* appears.

The action is much the same as described under *unlocking* and it will require as many turns of the tuning control to lock the mechanism as were needed to unlock it.

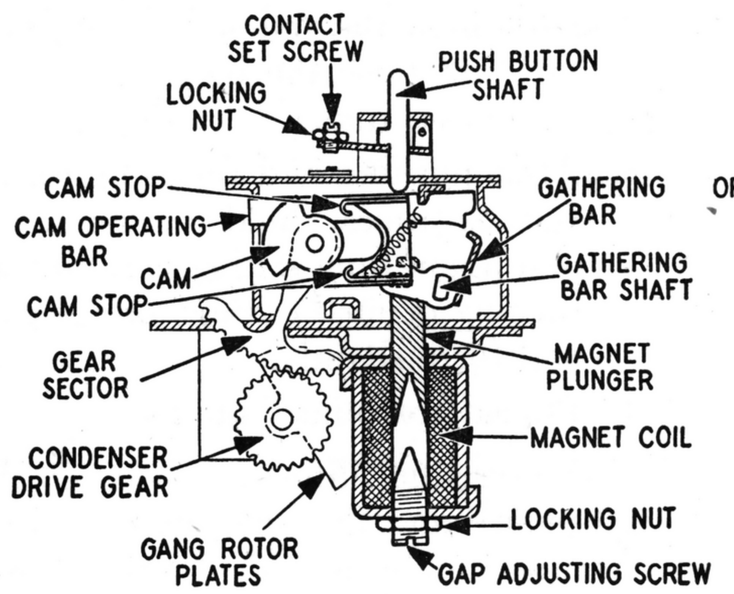

FIG. 95—*Magnet Plunger in "OUT" Position*

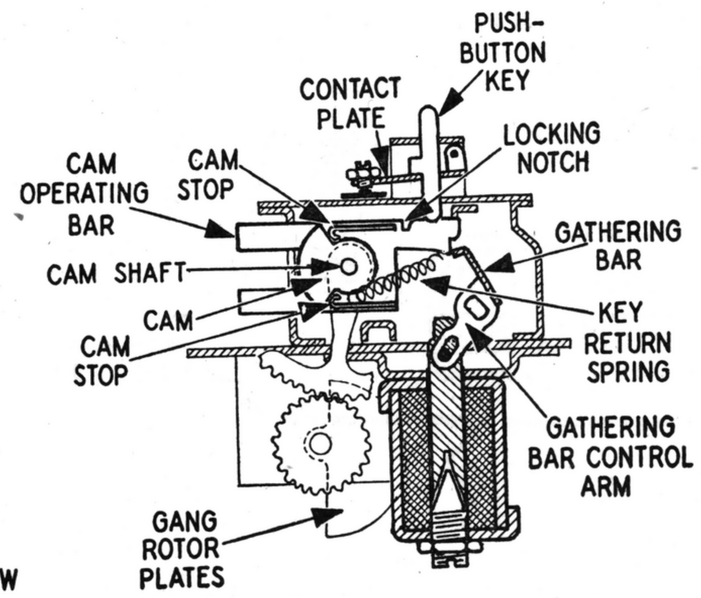

FIG. 96—*Magnet Plunger in "IN" Position*

Refer to Fig. 95 and Fig. 96. When a push-button is depressed, it makes mechanical contact with the cam operating bar located under it, and depresses the bar so that the gathering bar can make contact with it. At the same time, the key forces the contact plate downward, making electrical contact through the contact screw. When the contact screw makes contact, it energizes the winding of the magnet assembly causing the plunger to be drawn completely into the magnet as shown in Fig. 96. The plunger is mechanically coupled to the gathering bar and gathering bar shaft, so that when the plunger is drawn into the magnet, it causes the gathering bar to be forced ahead. The gathering bar engages the cam operating bar which is depressed by the push-button key and drives it forward as shown in Fig. 96. This position of the cam operating bar is indicated by the ends of the cam operating bar extending from the mechanism frame (see Fig. 98). When the cam operating bar moves forward, the cam stops attached to the bar engage the cam, rotating it until it is in the position indicated in Fig. 96. The rotation of the cam causes the cam shaft and gear segment to rotate likewise, rotating the gang condenser to a position corresponding to the station to which this particular key is set.

How the "Locking-Up" Mechanism Works

The cam shaft assembly consists primarily of a shaft on which five cams are alternately spaced between friction collars. On the clutch end of this bar is a short threaded section upon which screws the collar which is part of the clutch and clutch spring assembly. When the cams are locked, this threaded collar is turned upon the threaded section of this cam shaft, exerting pressure upon the cams and friction collars, thus locking them securely in position. When the cams are unlocked, this threaded collar is turned so as to unscrew it and exert a minimum of pressure on the cams and friction collars. The only pressure then exerted upon the cams to hold them in position is that exerted by a spring washer near the threaded end of the shaft. Thus the cams are held so they cannot move of their own accord, but are still loose enough to permit them to be set to correspond to the desired station.

The threaded collar is connected through the clutch to the manual tuning control, permitting adjustment of the cams from outside the tuning unit.

Operation of Clutch and De-Clutch Arm

The clutch mechanism of this tuner (see Fig. 98) functions every time a push-button is depressed. Its purpose is to de-couple the manual tuning control and its associated gears from the automatic portion of the tuner when tuning electrically. The clutch is a dual unit, providing positive mechanical coupling between the manual tuning gears and the cam shaft, and it also has a leather friction disc which operates in conjunction with the positive coupling element to remove excessive backlash when tuning mechanically.

When the plunger is drawn into the magnet, turning the gathering bar shaft, the cam attached to the shaft (Fig. 98) moves downward on the riser of the de-clutch arm, releasing the pressure on the de-clutch arm, which bears against the inside section of the clutch. When this pressure is released, the clutch return spring contracts, separating the two halves of the clutch, thus disengaging the manual tuning gears.

When the push-button is again released, allowing the plunger to be withdrawn from the magnet, the cam on the gathering bar shaft moves upward on the de-clutch arm riser, again exerting pressure on the de-clutch arm, and in turn on the clutch, thus engaging the two clutch sections, and making manual tuning possible.

Set Tunes Improperly

If the set fails to tune in stations properly, first check the set-up of the various buttons. If the set-up is incorrect, the set will tune consistently to the same point, and this condition can be remedied by resetting the buttons.

If the set will not tune in stations, although the plunger tends to move, make sure the Bristo headed set screws in the retaining collar are tight. This is the collar which is almost touched by the condenser drive gear sector when the condenser plates are unmeshed. A loose set screw may strike the unit frame, causing the plunger to stick in either the IN or OUT position.

If the set fails to tune properly, and the dial stops at different points when approaching the station from opposite ends of the dial the mechanism may not be properly locked up (see "Locking Tuning Mechanisms"). The next step is to check for binding of the

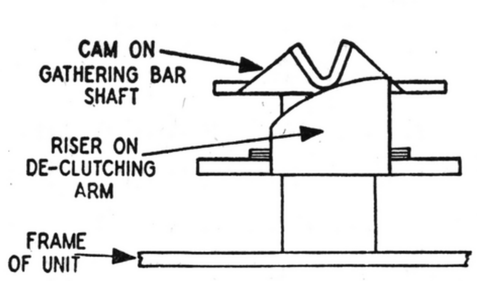

FIG. 97A
Correct Position of Cam on Riser

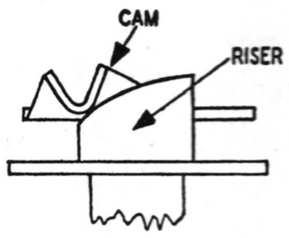

FIG. 97B
Position of Cam Too Low

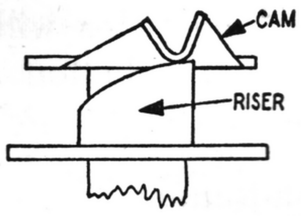

FIG. 97C
Position of Cam Too High

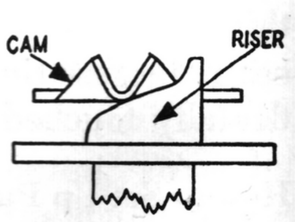

FIG. 97D
Correct Position of Cam on Alternate Type Riser

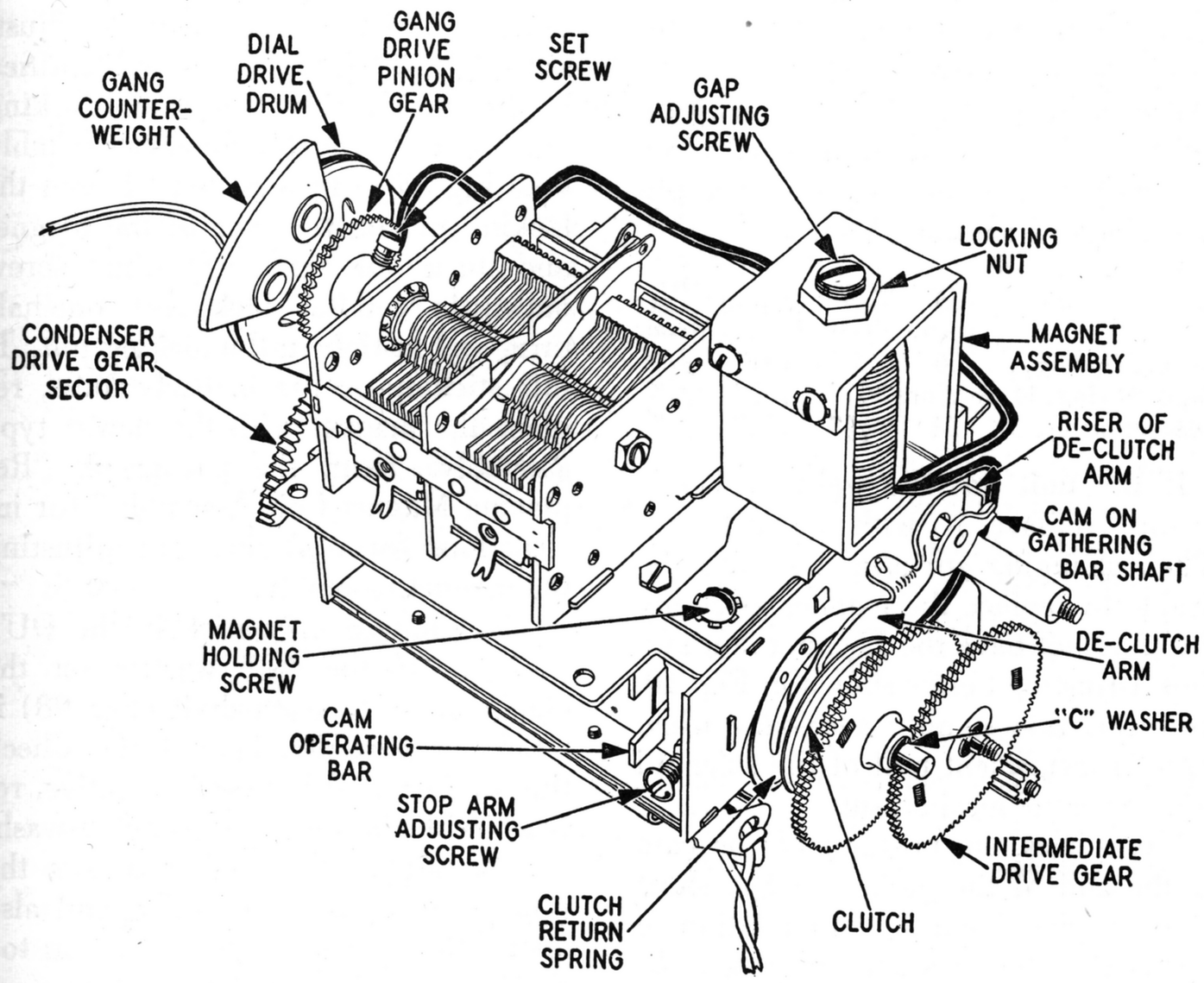

FIG. 98

mechanism (see section on "Binding"). This trouble also may occur if the pulling force of the magnet is not great enough. This may occur when the battery voltage is low (below 5 volts). It may also be due to too large a gap between the plunger and the pole piece of the magnet assembly. On later sets the gap can be adjusted as described in paragraphs 5 and 6 of "Replacing Magnet Coil Assembly." The adjustable magnet assemblies are identified by the Gap Adjusting Screw and Locking Nut shown in Fig. 98.

In the early type of magnet assemblies the gap is not adjustable. If one of these magnets is found to have insufficient pull, the remedy is installation of the new type magnet assembly. However, before replacing a magnet assembly, make sure that improper tuning is not due to low battery voltage or the other causes mentioned above.

Mechanism Where Tuning Control Fails to Reach Stop During Unlocking

This is probably due to the shearing off of the "C" washer on the clutch end of the cam shaft (see Fig. 98). On the earlier mechanisms, this "C" washer holding the clutch and gear assembly to the shaft was made of a fairly soft steel. Occasionally these washers may shear off if the customer continues turning the tuning wheel after the mechanism has become completely unlocked. This continued turning forces the gear and clutch assembly against the "C" washer, shearing it off completely. Replace this washer with the new hardened washer. This can be done without removing the tuning unit from the case. First lock the mechanism, then remove the nuts holding the triangular plate on the clutch end of the tuner. Unhook the plunger return spring so that no pressure will be exerted by the clutch. The washer can now be removed and a new washer installed.

On all early sets, replace this "C" washer even if the old one is still all right.

Shearing or partial shearing of this washer may cause slipping of the clutch or sticking of the plunger in the OUT position.

If a bronze washer is present between the "C" washer and the gear, remove it and discard it. If a steel washer is present, it must be left in place. On early mechanisms, a $\frac{1}{32}''$ steel washer was used in this position and it must be left in place.

Binding

If the radio tunes improperly, check for binding in the dial and tuning mechanisms. Below are enumerated some of the reasons for binding:

Rubbing Light Diffusion Plate: Two types of light diffusion plates were used, the new type being riveted to the cover, while the old type is mounted on the unit itself (see Fig. 99). If the new type light diffusion plate, which is mounted in the cover of the control head, rubs against the dial scale due to warping of the celluloid, cut this plate as shown by the shading in Fig. 99. This can be done without removing the shield from the cover. In some early units, this diffusion plate was mounted on the unit itself. In this case, enlarge the notch fitting over the dial lamp wire as shown in Fig. 99. Exercise care when enlarging the notch, as the celluloid is quite brittle and may break. Then cement the diffusion plate to the front of the contact plate assembly so that the shield rests flat against this metal plate.

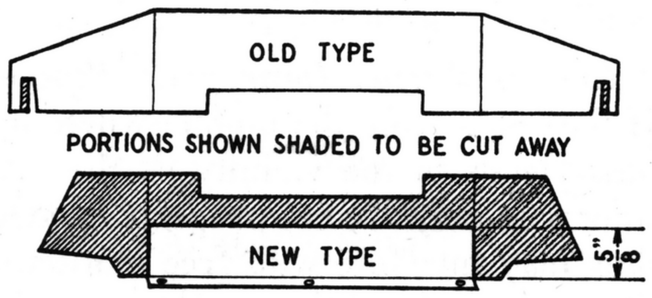

FIG. 99—*Illustration Showing Method of Cutting Light Diffusion Plate*

Ends of Drum Rubbing Brackets: The dial drum should have a slight amount of end play. If it doesn't, it may be binding. This may be due to improper placement of the volume control mounting bracket. To correct this difficulty loosen the two screws holding this bracket and move it slightly farther away from the drum.

Similar binding may also be due to a loose end cap on the dial drum. In this case, force the cap back on the drum and punch-mark the cap to hold it in place on the dial drum.

In a few cases it may be found that dial end bearing is out of line or slightly off center. The bearing can generally be bent slightly to restore it to its proper position. If this cannot be done, replace the dial scale assembly.

Binding of the drum on the mounting brackets may be due to the fact that the control units fitted too tightly

in early cars. This causes the escutcheon to be forced sideways, thus pressing on the tuning controls, which may move the dial drum brackets. This binding can generally be eliminated by bending the brackets slightly outward.

Similar difficulties will be encountered if the control head is not properly installed. When mounting the head, tighten the wing nuts evenly, so the control head will not have a tendency to bind against the dash opening, which would push the escutcheon against the controls.

Drive Pulley Striking Antenna Coil Shield: Check to see that the dial drive pulley is properly located on condenser shaft. Its bushing should touch the condenser pinion gear.

Also, the antenna coil shield can may be moved slightly away from the drum by loosening the two nuts holding down the can.

It may also be possible to move the entire tuning unit slightly away from the shield can. Loosen the four screws holding down the unit and shift it.

Chassis Wiring Improperly Placed: If the leads from the on-off switch and other leads in the vicinity of the "A" filter assembly are not properly located, they may interfere with free motion of the dial cord or the condenser drive gear sector. Dress these leads so that they cannot touch these moving parts.

Binding Between Sector and Pinion Gears: Excessive friction between these gears can be reduced by changing the position of the pinion gear so that the set screw indicated in Fig. 10 points upward when the gang is completely closed. This draws the pinion gear slightly farther away from the gear sector, reducing the pressure between them.

Counter-Weight Strikes Case: Should the gang counter-weight strike the wrap-around case, loosen the four screws holding the tuning mechanism to the chassis and shift the tuning mechanism slightly so counter-weight clears case. Keep in mind that the case side may be pulled in slightly when the cover is put on. If the case is warped inward, bend it slightly outward till counter-weight does not strike it.

Slipping Clutch (Backlash)

A slipping clutch is indicated by excessive backlash during manual tuning. First check to see that the correct plunger return spring is used.

The correct type of spring may be determined from the following table giving the dimensions of the three types of springs which have been used.

	No. of Turns	Length of Body	Overall Length	Outside Diam.
Correct Spring...	36	7/8"	1 3/8"	7/32"
Light Spring.	34 or more	5/8"	1 1/4"	3/16"
Heavy Spring.	24	13/16"	1 5/8"	9/32"

If the unit has the light or heavy spring, replace it with correct one. When changing springs, it is also desirable to replace the magnet assembly if it does not have the Locking Nut and Gap Adjusting Screw shown in Fig. 10. However, this is only necessary when there is insufficient pull of the solenoid to operate the mechanism.

Next check the position of the cam on the end of the gathering bar shaft (copper plated shaft) with relation to the riser of the de-clutch arm *while the plunger is out.* See Fig. 98 and Fig. 97A. The cam should be halfway up the curved portion of the riser as shown in Fig. 97A.

If the cam is not halfway up the riser while plunger is out, as shown in Fig. 97A loosen the two Bristo set screws in the retaining collar on the other end of the gathering bar shaft and move the retaining collar on the shaft until the cam is properly positioned on the riser. A special set screw wrench is needed to fit the Bristo set screws.

In all cases where slipping clutches are reported, check to see that there is no excessive friction in the gang condenser, dial or gang condenser drive gears. See section on "Binding."

Sticking Magnet Plungers

If the automatic tuning mechanism does not operate, but manual tuning is possible, the plunger may be stuck in the OUT position (see Fig. 95). If manual tuning control turns easily but does not tune stations, the plunger may be stuck in the IN position (see Fig. 96). A loose set screw on the retaining collar on the gathering bar shaft may strike the frame and cause the plunger to stick, so check the set screws first.

If the plunger sticks when the plunger is all the way in, it is sticking against the conical pole piece of the magnet assembly.

On the later sets, the gap between the plunger and the pole piece is adjustable. Adjustable magnets are identified by the gap adjusting screw and locking nut on the end of the magnet assembly (see Fig. 98). In these sets, loosen the locking nut on the rear of the magnet and turn the gap adjusting screw outward (counter-clockwise) one-half turn, and re-tighten the locking nut. If this sticking occurs in early units, replace the magnet with the newer type assembly. Read the paragraph "Replacing Magnet Coil Assembly" for instructions for replacing and adjusting the magnet assembly.

The plunger may stick in the OUT position, if the "C" washer on the clutch end of the cam shaft (Fig. 98) is totally or partially sheared off. Check this washer, and if found defective, replace with the hardened type of washer. A faulty "C" washer allows the plunger to come out too far, and also allows the cam to reach a position too high on the de-clutch arm riser (see Fig. 97C).

After checking the "C" washer, check the adjustment of the cam on the riser, as explained under "Slipping Clutch."

If the cam is too far up on the riser (see Fig. 97C) it lets the plunger come out of the magnet too far and this may cause sticking. If the cam is not far enough up on the riser (see Fig. 97B) the clutch may slip.

If the position of the cam is correct as shown in Fig. 97A, but the plunger still sticks, loosen the two screws holding down the magnet and shift it slightly until the plunger moves freely, then re-tighten the screws. If this does not clear up the difficulty, replace the entire magnet assembly.

Replacing Magnet Coil Assembly

To replace a magnet coil assembly, proceed as follows:

1. Remove top and bottom covers of tuning unit. Unsolder red and black magnet wires from points to which they connect.
2. Take out two round headed screws holding magnet to mounting plate.
3. Lift off old magnet assembly and install new assembly.
4. When replacing this magnet assembly, before tightening the screws holding down the unit, check to see that the plunger moves freely inside the magnet coil. If it has a

tendency to bind, shift the position of the magnet slightly until the plunger moves freely, then tighten down the holding screws.

5. It is now necessary to set the large adjusting screw on the top of the new magnet. Loosen the nut and turn the screw out several turns. Now push down one of the push-button shafts next to the drum dial. Then with a screwdriver, push the plunger into the magnet as far as it will go.
6. While holding the plunger in *very tightly*, you can now release the push-button shaft and turn the magnet adjusting screw in, until you feel the screw striking the plunger. When this happens, back the screw out one complete turn and retighten the locking nut. *This adjustment must be made very carefully, since if the threads are tight it is difficult to notice the exact point where the screw strikes the plunger.*

Important: To get proper adjustment, a push-button shaft must be depressed before pushing in the plunger so that the plunger operates the tuning mechanism as indicated by one of the cam operating bars extending from the frame (Fig. 98). If the above adjustment is done while the power is on the unit, the plunger will pull in by itself as soon as you depress one of the push-button shafts. It is then merely necessary to hold the plunger in tightly with a screwdriver and *release the push-button shaft.* The adjustment can then be made.

Stop Arm Adjusting Screw

The function of this screw (Fig. 98) is to prevent damage to the gang condenser plates when the rotor plates are fully opened. This screw is adjusted so that the stop arm on the cam shaft will strike it just before the gang condenser plates open so far as to strike the stationary plates. Set this screw so the stop arm will strike it when the rotor plates are approximately 1/8" from the stator plates. Then tighten the locking nut so as to hold the screw in this position.

There is also a fixed stop whose purpose it is to stop the condenser plates just before they strike the fixed plates when the plates are fully meshed. This fixed stop is part of the frame assembly. When the gang condenser or any of its associated parts are replaced or otherwise adjusted, before tightening the set screws holding the condenser drive pinion gear to the shaft, set the rotor plates so that their upper edges are flush with the top edges of the stator plates. Then turn the condenser drive gear segment until the stop arm on the cam shaft strikes the fixed stop on the frame, then tighten the set screws. When this adjustment is properly made, and when the stop arm adjusting screw is correctly set, no strain is put on the rotor plates of the condenser in either the open or closed position of the gang condenser.

Adjustment of Contact Screw

The contact screw, once properly set, seldom requires readjustment. Improper adjustment may be identified by the following symptoms:

Contact Screw Too Far In: When a push-button key is depressed, the magnet will operate, but the cam operating bar may not be pushed through as shown in Fig. 98.

Contact Screw Too Far Out: This may permit the push-button key to exert too much pressure on the cam operating bar and cause it to stick.

Chattering of the mechanism may be caused when the screw is either too far in or too far out. Adjust the screw until the unit operates properly when any one of the push-buttons is depressed.

Position of Gang Condenser Counter-Weight

Refer to Fig 98. The purpose of the counter-weight shown in this illustration is to counter balance the weight of the gang condenser. When the weight is in correct position the edge of the weight nearest the set screw is approximately straight up and down with the gang condenser fully meshed. When replacing the dial drive drum, always check to see that this weight is in the position described above, or the tuning unit may not operate satisfactorily.

SECTION 9G

Motorola Electric Automatic Tuner

NOTE

All seven tuners are identical in construction, except for the condenser gang.

E5T has a 3-gang condenser and is used in Models 9-49 and 9-69.

E6T has a 2-gang condenser and is used in Models 15-F, 20-P, 21-L, 22-S, 24-K, and 25-N.

E7T has a special high frequency condenser gang and is used in Police Cruiser Model P-69-14.

E11T has a 3-gang condenser and is used in Model 500.

E12T has a 3-gang condenser and is used in Model 700.

E13T has a 2-gang condenser and is used in Models 34K6 and 34K7.

E14T has a 3-gang condenser and is used in Model 550.

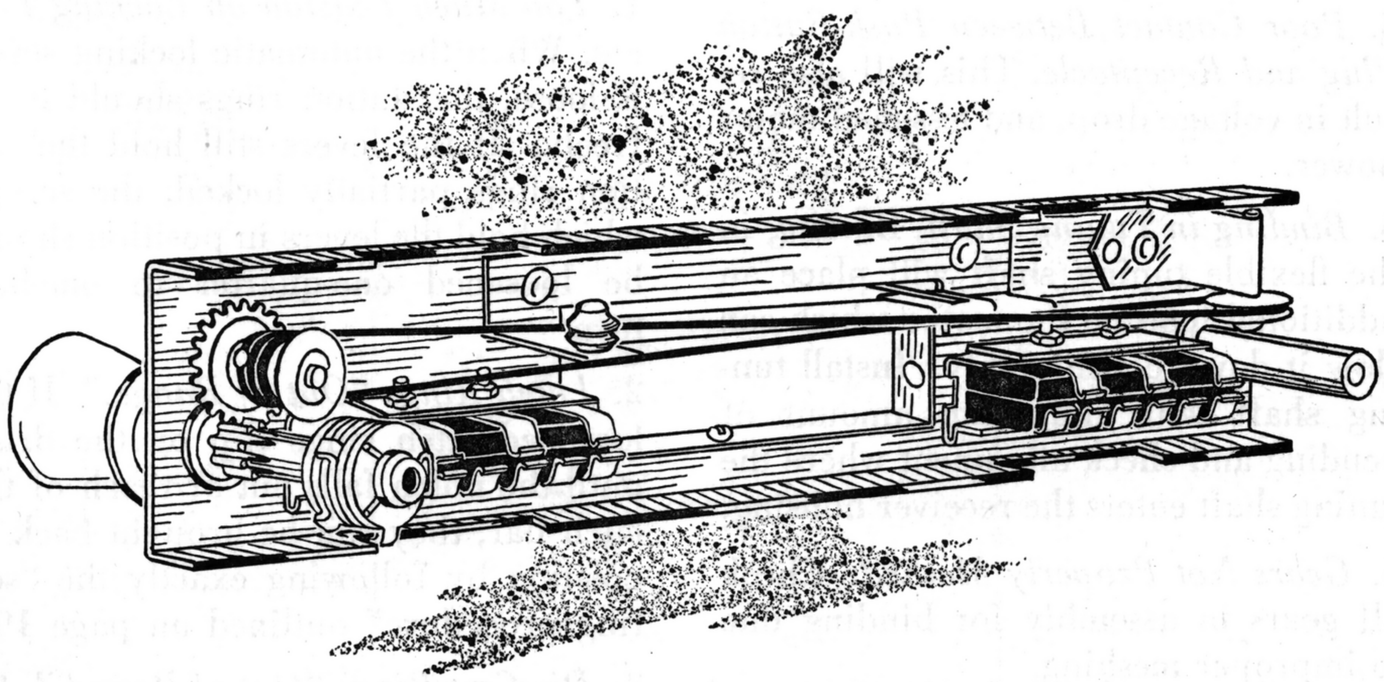

FIG. 100

Motor Does Not Run

1. *Motor Contacts in Control Head Not Closing.* Open the control head and inspect the motor contacts. If the gap is too great, contact will not be made when the button is pressed. Adjust by bending carefully.

2. *Poor Contact at Push-Button Plug.* Inspect the contacts between the plug and the receptacle on the chassis.

3. *Open Circuit in Motor.* Check all connections to motor and check motor winding for continuity.

4. *Motor Brushes Not Making Contact.* Check contact between brushes and commutator. Clean dirty commutator with carbon tetrachloride.

5. *Low Battery Voltage.* A weak or defective battery in the car would not deliver sufficient voltage to run the motor.

6. *Flexible Tuning Shaft Binds.* Binding in the flexible tuning shaft places an additional load on the motor. If this load is too great, it will prevent the motor from turning the mechanism.

7. *Magnet Fails to Release.* If the magnet which has previously been energized, fails to release the latch bar for any reason, the motor cannot turn the mechanism.

Mechanism Runs Sluggishly

1. *Low Battery Voltage.* A weak or defective battery will not deliver sufficient voltage to turn the motor at normal speed.

2. *High Resistance Contact in Control Head.* High resistance at the push-button contacts will cause a voltage drop which will prevent the motor from turning at normal speed.

3. *Poor Contact Between Push-Button Plug and Receptacle.* This will also result in voltage drop, and lessened motor power.

4. *Binding in Tuning Shaft.* Binding in the flexible tuning shaft will place an additional load on the motor which can slow it down considerably. Install tuning shaft with minimum amount of bending and check alignment where the tuning shaft enters the receiver housing.

5. *Gears Not Properly Meshed.* Check all gears in assembly for binding due to improper meshing.

6. *Defective Motor.*—Replace.

Motor Fails to Reverse

1. *Reversing Switch Not Properly Adjusted.* See instructions on page 195.

2. *Open Circuit in Motor.* If one side of motor circuit is open, motor will run in one direction only.

3. *Open Magnet Winding.* An open magnet will not pull latch down; consequently will not cause motor switch to reverse.

4. *Latch Bar Spring Too Tight.* If the latch bars operate under too much tension the magnet may not be able to pull the latch down.

Fails to Retain Original Setting

1. *Latch Rings Not Locked Securely.* The locking screw must be pulled down securely, otherwise, the shock of the sudden stopping will tend to slide the rings away from the original setting.

2. *Original Setting Not Accurate.* Resetting of magnets may be necessary after several days' use, during which time the mechanism goes through a "shaking down" process.

3. *Electrical Drift.* This is usually the result of a great change in temperature. Automatic compensation is provided in the circuit to take care of the normal operating temperature range. Before making original setting, turn the set on and permit it to play long enough to arrive at a constant operating temperature. In zero weather do not expect the set to tune "on the nose" until after a constant temperature has been reached. In severe cases of electrical drift occurring at normal operating temperature, change the compensating condenser.

Impossible to Set Up Stations

1. *Too Much Tension on Locking Levers.* When the automatic locking screw is loose, the station rings should move freely. If the levers still hold the station rings partially locked, the screws which hold the levers in position should be loosened one-quarter to one-half turn.

2. *Latch Rings "Out of Range."* If the loosened latch rings slip on the drum until the notch falls out of reach of the latch bar, they can be brought back to position by following exactly the "setting procedure" outlined on page 195.

3. *Die Cast Rings "Out of Round."* Install new rings.

4. *Die Cast Hub Expanded.* This usually causes the two outside rings to bind. Can be corrected by filing hub.

Fails to Stop at Station

1. *Open Magnet Winding.* Check for continuity and replace if necessary.

2. *Magnet Contact in Control Head Not Closing.* Inspect contacts. Adjust or clean if necessary.

3. *Latch Bar Defective.* Inspect latch bar to make sure that it has not been damaged. Replace latch bar, if required.

4. *Poor Contact at Push-Button Plug.* A poor contact here means a voltage drop which reduces the pulling power of the magnet.

5. *Improper Spacing of Magnet.* Check the spacing between the latch bar armature and the magnet pole. When the tip of the latch bar is seated all the way down in the notch in the latch ring, the armature should not quite touch the magnet pole. A hair line of light should be visible between them.

6. *Latch Rings Not Locked Securely.* If the latch rings are very loose the motor will continue to turn the gang until the plates are completely meshed.

Latch Bar Sticks in Notch

1. *Manual Tuning Shaft Binds.* Binding in the tuning control shaft causes the latch bar to press hard against one side of the notch and may prevent it from releasing as the magnet is de-energized.

2. *Latch Bar Spring Weak.* Check latch bar tension spring to make sure it is pulling away from the magnet with sufficient force. Spring tension is adjustable.

3. *Magnet Contact in Control Head Stuck.* Check the magnet switch in the control head to make sure it breaks contact when pressure is released on the button. Check for frozen contact points, or for sticking button.

4. *Armature Rivet Worn.* There is a brass rivet at the tip of the armature, to prevent the armature freezing to the magnet. If this rivet is worn down, permitting the steel armature to actually touch the magnet pole, it may freeze in that position.

5. *Burr on Tip of Latch.* Latch tip should be smooth and shiny.

6. *Binding in Latch Bearings.* Latch must move freely but not sloppily.

7. *Latch Tips Not Centered on Latch Rings.* Latch tips must not rub bakelite guide rings. The latch bar bearing shaft is adjustable.

8. *Friction Clutch Too Tight.* A tension washer between the motor pinion and the brass pinion collar acts as a friction clutch to absorb the shock of stopping the motor quickly when a station is tuned. If the tension is too tight, the torque of the stopped motor will hold the latch bar tip in the notch.

9. *Motor Brushes Too Tight.* Too much friction between the motor brushes and the commutator will cause the same thing.

Setting Stations

NOTE: Before setting any station, let the set warm up for not less than ten minutes. If you wish you can "set" the automatic tuner on the service bench before installing the radio in the car. Use a short aerial and peak the antenna trimmer to it. Then readjust the antenna trimmer after the installation in the car.

IMPORTANT—You will note that the 9-contact plug on the end of the control head cable has one pin that is shorter than the others. For the "setting up" procedure, this plug should be inserted in its receptacle on the receiver only half way. This will cause all of the magnet terminals to be connected, but will not permit the tuning motor to run during the adjustment, since the short pin will not make contact, thereby holding the motor circuit open. The motor should not run at any time during the "setting up" procedure.

1. From the set of call letter tabs provided, detach the proper ones for the six stations. The station tabs should then be inserted in the space provided in the face of station tuning buttons. Cover the tab with a small rectangular piece of celluloid. Both tabs and celluloids snap into position.

2. Loosen the *Automatic Locking Screw.* This screw should be turned counter-clockwise four or five revolutions—far enough to assure plenty of looseness.

3. Turn the dial all the way to the low frequency end (535 K.C.)

4. Press the first button and hold it down. A faint "click" should be heard, indicating that the tuning magnet has attracted the latch bar.

5. Holding the magnet energized, turn the dial manually all the way to the high frequency end (1550 K.C.) and then all the way back to the low frequency end (535 K.C.)

6. Still pressing on the button, tune in the station to be set on that button.

7. Proceed to set the remaining five stations. For each station follow steps 3, 4, 5, and 6, as outlined above. *At no time in the setting up procedure should the Tuning Motor be permitted to run.*

8. Tighten the automatic locking screw very securely. Do not hold the tuning knob while locking the automatic, but allow the mechanism to turn to its natural stop.

9. Push the plug all the way into the receptacle on the receiver housing so the short motor pin will also make contact.

Reversing Switch

NOTE: Four adjusting screws extend upward through the switch mounting plate, three of them in line, and one set off by itself. (See Fig. 101.)

1. Turn the rotor assembly until the *High* sides of all latch rings rest opposite the latch tips.

2. Turn screw "A" in until all latch bar tips touch *High* side of ring and then turn the screw back one-half turn. (Spacing between latch tip and high side of ring at point "X" should be 8 to 12 thousandths of an inch.)

3. Hold any latch bar tip down on *High* side of ring and adjust screw "C" (center screw) until the bakelite insulator on the center switch leaf just

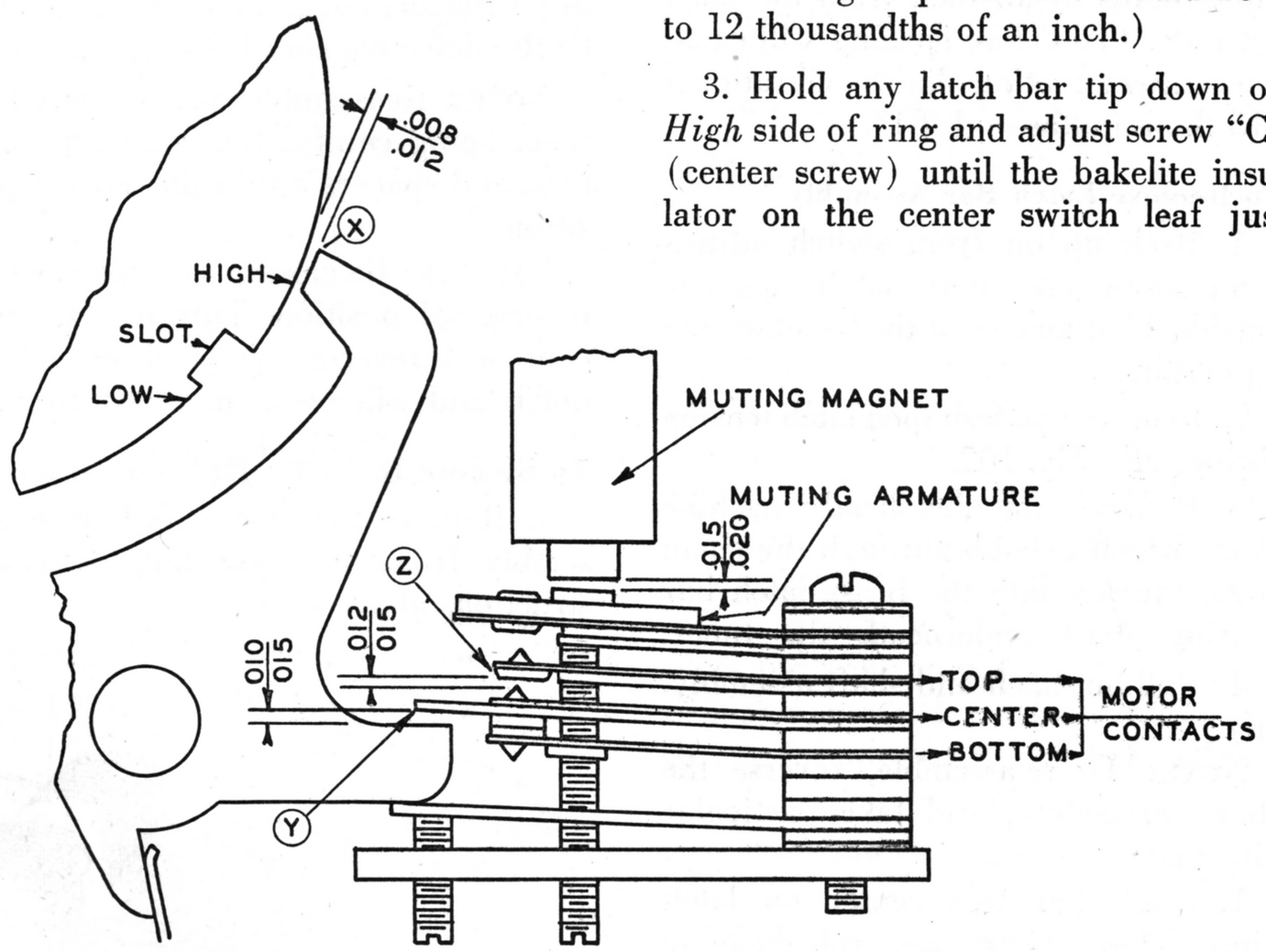

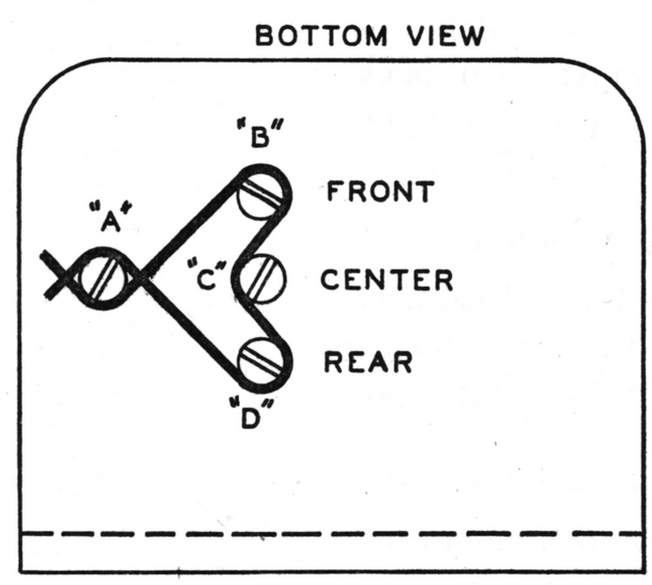

FIG. 101

barely misses touching the heel of the latch bar at point "Y." (Check adjustment by pressing other latch bars. The depressed latch bar must not lift the center contact even slightly.)

4. With latch bar at rest position adjust screw "B" (front screw) until top motor contact is lifted from center contact by 12 to 15 thousandths of an inch at point "Z." (15 thousandths = 1/64".)

5. Turn rotor until *Low* side of ring rests under latch tip. Press any latch bar down and make sure switch actually reverses. (Bottom contact must break and top contact make sufficiently to lift the top switch leaf slightly from the bakelite spacer.)

6. Turn screw "D" (rear screw) until muting relay armature rests 15 to 20 thousandths of an inch from the magnet pole. (Too close spacing will cause intermittent muting due to vibration.) (15 thousandths = 1/64".)

To Remove Latch Bar Assembly

1. Back up on front switch adjustment screw (A) until latch tips rest outside the diameter of the bakelite ring separators.

2. Remove comb shaped latch tension spring. (E) Fig. 102.

3. Remove the hex-head machine screw which extends through the small angle bracket into the brass latch bar bearing shaft underneath the tuner.

4. Pull out latch and shaft assembly. (F)

NOTE: To re-assemble, reverse the above procedure, and take particular care that:

1. Latch bar tips center on latch rings. They should not rub bakelite ring separators. (Spacing is adjustable through elongated hole in small bracket under tuner.)

2. When readjusting screw (A), turn it all the way in until latch tips touch high side of rings; then back screw up one-half turn. (See reversing switch adjustment on page 195.

To Remove Latch Ring Assembly

1. Back up on switch adjustment screw (A) until latch tips rest outside the diameter of the bakelite ring separators.

2. Remove locking screw. (G)

3. Remove the three locking levers. (H)

4. Lift the locking nut off the end of the rotor shaft.

5. Carefully loosen the three screws (J) which hold the ring assembly to the rotor hub, and remove all rings and separators as a unit, being careful to keep the three screws in position through the assembly.

NOTE: To reassemble, reverse the above procedure. Work carefully—do not let the rings and separators get off the screws.

To Replace Defective Latch Ring

1. Remove the entire latch ring assembly from the rotor hub. (See instructions above.)

2. Lay assembly on flat surface with screw heads down.

3. Remove rings, separators, and brass spacing collars, one at a time, until the defective ring is exposed.

NOTE: Reassemble parts one at a time, being careful that rings, separators, and spacers are in the correct position.

CAUTION: Be careful to replace rings in original position. Turning the ring over will reverse the position of the notch and will result in faulty tuning.

To Remove Defective Hub and Gear

1. Remove the entire latch ring assembly from the rotor hub. (See instructions above.)

Fig. 102

A. Switch Adjustment Screw
B. Switch Adjustment Screw
C. Switch Adjustment Screw
D. Switch Adjustment Screw
E. Latch Spring (6 finger)
F. Latch Assembly Complete
G. Automatic Locking Screw
H. Clamping Lever
J. Ring Assembly Screw
K. Idler Gear Assembly
L. Motor Pinion
M. Pinion Collar
N. Tuning Motor
P. Relay Magnet Assembly
R. Reversing Switch
S. Manual Drive Shaft
T. Tuning Magnet

2. Loosen the four Bristo set screws in the rotor hub.

3. Loosen the one Bristo set screw in the bakelite flexible shaft coupling.

4. Pull the rotor hub off the gang shaft. The manual tuning gear and coupling will have to be removed at the same time. The brass collar on the motor shaft may also need to be removed.

NOTE: When installing a new hub, turn the gang to full mesh and the hub gear against its stop before tightening set screws.

SECTION 9H

Flash Tuning

The Flash Tuning mechanism consists essentially of the toothed disc at

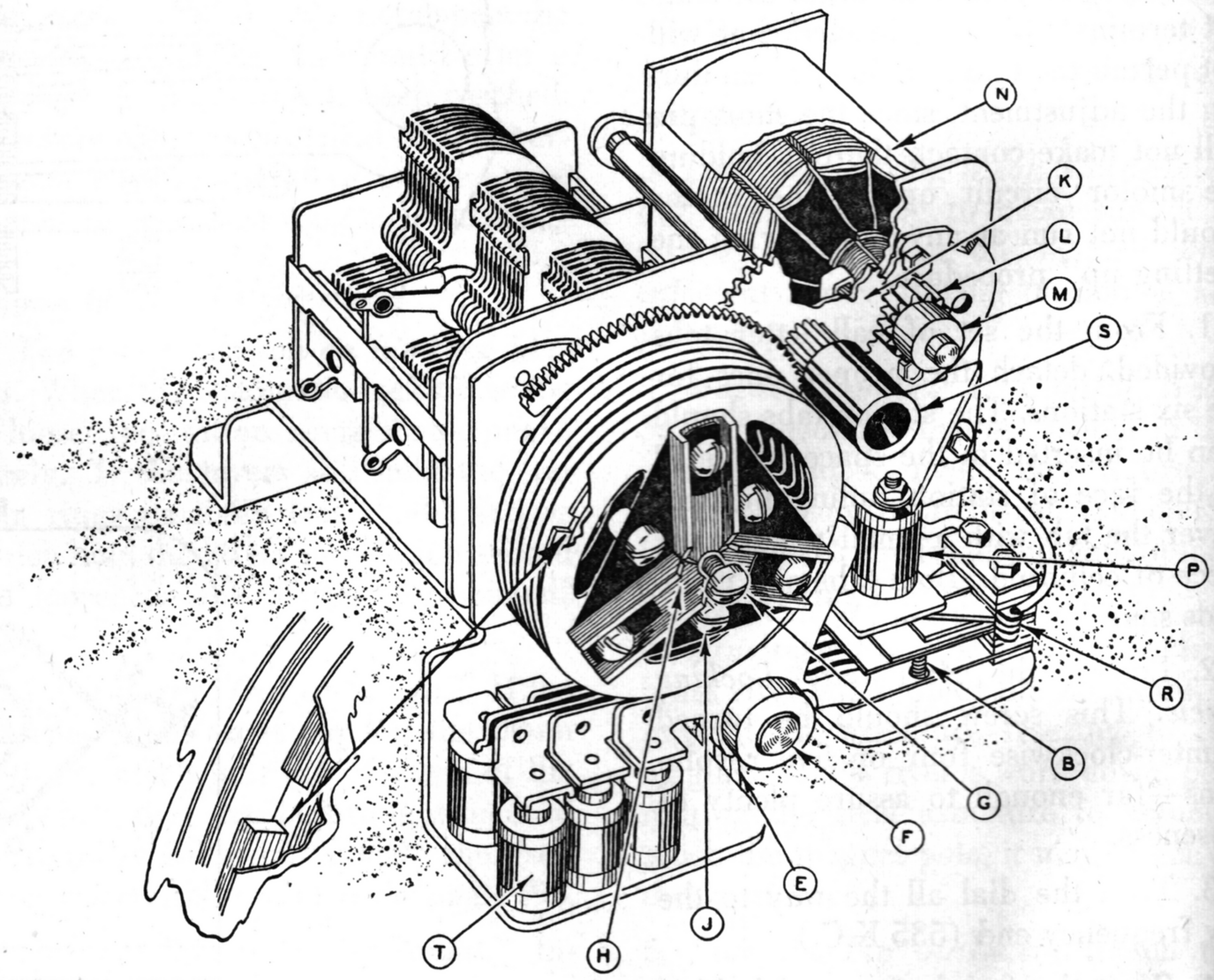

FIG. 102

the rear of the variable condenser and the relay. The function of the toothed disc is to operate the relay when the variable condenser is turned to the various pre-selected stations. The relay contacts close the Flash Tuning light circuit, illuminating the station's call letters. At the same time they remove the high negative bias which blocks off the audio, keeping the receiver silent until the pre-selected station is tuned in.

The relay coil normally is energized. It is short circuited by the bent up tooth of the disc contacting the movable arm. This is why the Flash Tuning light flashes for a second or so when the receiver is first turned on—the rectifier has not heated sufficiently to furnish current to energize the relay.

Turn the Flash Tuning and Selectivity Switch knob to the "SHARP" position. Then tune in the first station on your list of selected stations.

Leaving your station tuned in, go to the rear of the radio. You will see a semi-circular toothed disc, as illustrated in Fig. 103. There is also a flat spring arm, with a small rounded projection near its end, that moves over the teeth of this semi-circular disc as the Station Selector knob is turned. Still leaving your station tuned in, carefully note which tooth on the semi-circular disc is directly under the rounded projection of the spring arm. Mark this tooth with a pencil. Note that there is a double row of teeth and either the tooth that faces you or the tooth that faces the front of the radio may be bent up, depending upon which one is nearer the rounded projection of the spring arm. After you have marked the tooth, turn off the radio. Then tune away from the station (with the Station Selector knob, not the movable arm) and bend this marked tooth straight up, using the slotted end of the tool provided. See Fig. 103. It is important that the slot of the tool fit as far down as possible on the tooth before bending. This is necessary so that the complete tooth will be bent up instead of just part of the tooth. When this is properly done, the projection of the spring arm will touch the bent up tooth when the toothed disc is rotated by turning the Station Selector knob.

Turn the radio on again and tune in the next station on your list of selected stations. Mark the tooth that now is under the projection of the spring arm when this station is tuned in. Turn off the radio, tune away from the station so that the spring arm will not be in the way and bend up this marked tooth, using the tool provided. Proceed in the same manner for each of the other stations on your selected list. Turn off the radio each time before bending up the tooth. Otherwise a slight spark may occur, although there is no danger of shock. When properly done, the spring arm will touch each of the teeth that has been bent up but will not touch any of the other teeth, as the Station Selector knob is turned. Since the mechanism will already be set up on teeth close to the ones you will want to use, these old teeth must be bent back down.

Turn the Flash Tuning and Selectivity Switch knob to the "FLASH" position. Now again tune in the first station on your selected list. As its position is reached, the bent up tooth will touch the spring arm and a light will flash on the dial at a position opposite the end of the dial pointer.

SECTION 9J

Packard 333915

First turn the receiver on and allow it to operate for twenty minutes before making these adjustments.

Press in the "DIAL" button and hold it in until the tuning motor stops, indicating that your receiver is now connected for manual tuning.

Using the tuning knob, tune in the station whose call letters appear on the extreme left hand button (Button No. 1, Fig. 104). This is done so you can identify the station by its program.

Remove the front cover on the receiver case. Two slots are provided at each side of the case so that the cover can be pried off easily. CAUTION: If cover is pried off with a screwdriver, do not push screwdriver too far into case. After the cover has been removed, you will note two rows of adjusting screws in the receiver (See Fig. 104).

Press in the button bearing the call letters of the station you have just tuned in manually (Button No. 1 on extreme left). Hold this button in until the tuning motor stops running. Then, using a screwdriver, adjust the screw marked 1A (in the receiver case) until the station you were just listening to is heard again.

Adjust the screw marked 1B for maximum volume. Repeat adjustment of 1A, making sure you set it to the point where the tone is the deepest, also where hiss and noise are at a minimum. *These adjustments must be made very carefully to assure good reception.*

The set-up for this station is complete and you can proceed to set up the next station which you have labelled on the push-buttons. Proceed as follows:

(a) Press in "DIAL" button, and hold it in until tuning motor stops.

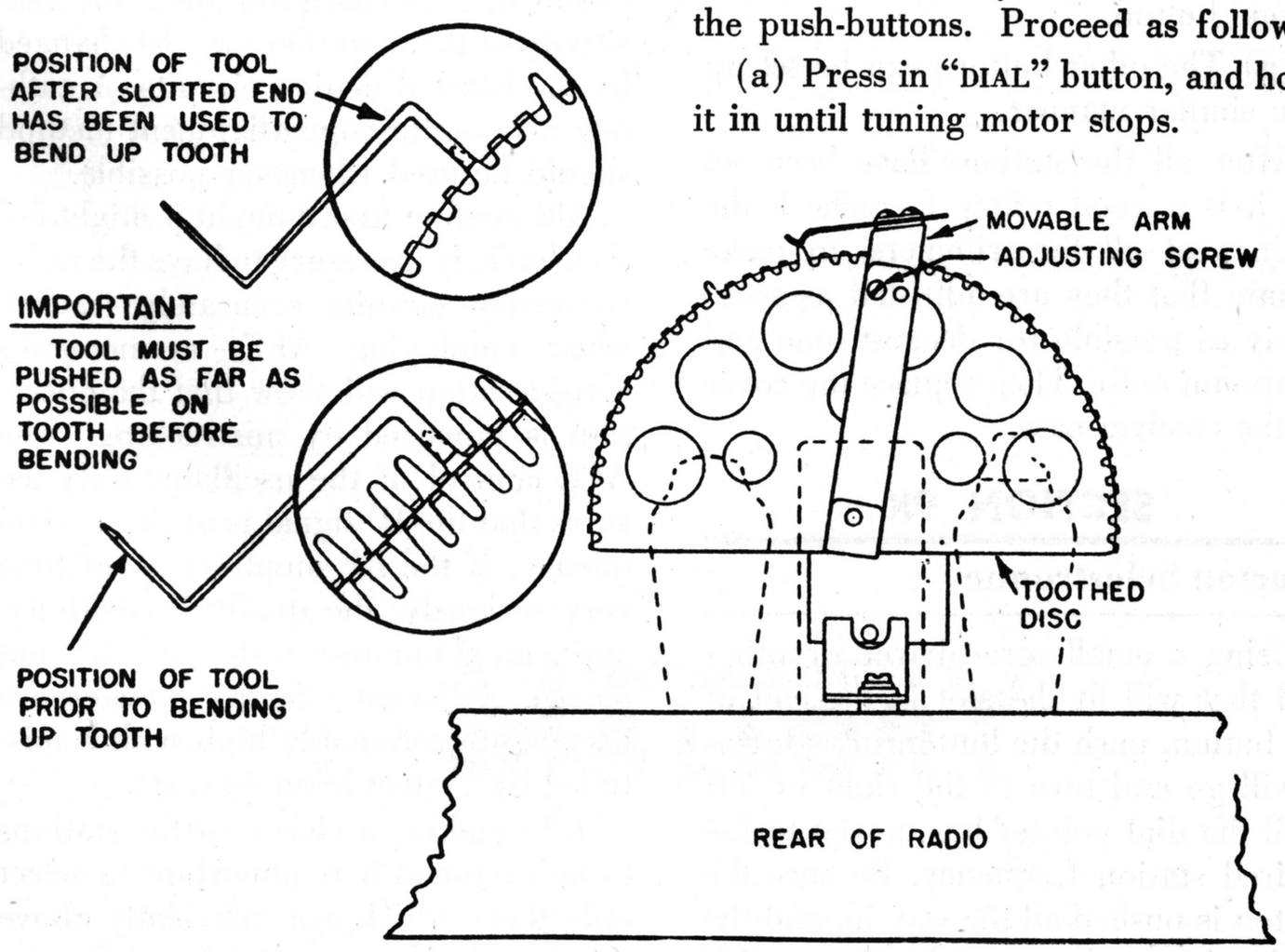

FIG. 103

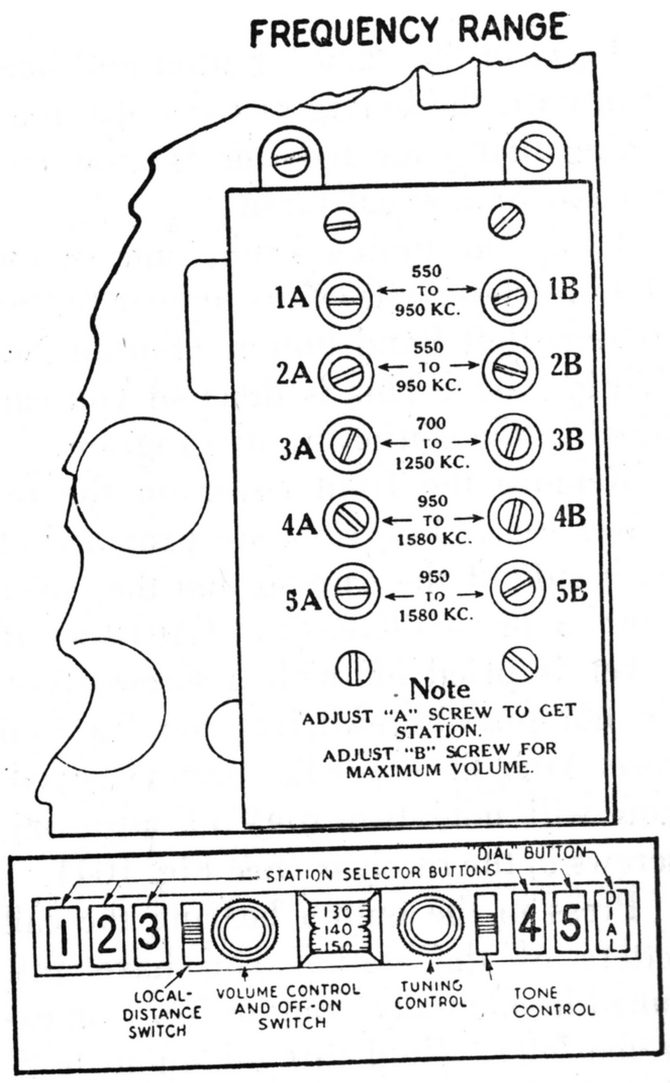

FIG. 104

(b) Using the tuning knob, tune in the station whose call letters appear on the second button from the left (Button No. 2, Fig. 104) and note the program being received.

(c) Press in Button No. 2.

(d) Adjust screw No. 2A until desired station is again tuned in.

(e) Adjust screw No. 2B for maximum volume. Repeat adjustment of 2A, adjusting it for deepest tone.

(f) This completes the set-up of the second button.

(g) The other buttons can be set up in a similar manner.

After all the stations have been set up, it is a good policy to recheck the settings of all the trimmers, to make certain that they are adjusted as accurately as possible for deepest tone and minimum noise. Then replace the cover on the receiver case.

SECTION 9K

Sparton Selectronne

Using a small screwdriver or other tool that will fit the slot in the end of the button, push the button in as far as it will go and turn to the right or left until the dial pointer has moved to the desired station frequency. Be sure the button is pushed all the way in, and the station is tuned accurately. Repeat this procedure for each of the five remaining buttons. Check all buttons by pushing them in, one at a time, to determine whether the desired stations are tuned properly.

Suggestions for Servicing Automatic Tuned Receivers

The purpose of this presentation of the subject of automatic tuning has been to give the service engineer a broad and comprehensive review of the various systems in use and their inter-relation.

Several general suggestions are offered as applicable to all makes of receivers and worthy of consideration:

1. Make certain that the alignment of IF and RF circuits is precise since quality of reception and satisfactory signal to noise ratio are dependent on precision of resonance. This is especially true in models which are not equipped with automatic frequency control.

If band widening circuits are employed in the IF amplifier it is highly desirable to use visual means of alignment. Some receivers have band widening on the automatic position and not on the manual position. In these it is highly desirable to observe whether the band widens without shifting of the center of tune when changing from manual to automatic positions by the transfer means. The electric tuning eye of the receiver is not always an accurate indication of this condition since the sensitivity of the amplifier may be changed by the band widening circuits. A cathode ray oscilloscope alignment method should be used whenever possible.

Although at first thought it might not seem strictly necessary to have the radio frequency circuits accurately tracked when employing AFC, a moment's consideration will show that the operation is impaired by mistracking. The AFC control of the oscillator only assures that the IF signal is of proper frequency. If the RF amplifier is off tune very seriously, the quality, sensitivity, and signal-to-noise ratio will be impaired. Adjacent channel interference may be objectionably high with a mistuned RF system in an AFC set.

2. In making a choice of the stations to be pretuned it is important to select only those which are sufficiently above the noise level as to furnish satisfactory entertainment at all times. An interesting bit of owner psychology is involved in the consequences of improper choice of stations. The purchaser of a new automatic tuned radio receiver is not acquainted with the phenomena of drift of tune due to temperature, mechanical aging of parts, humidity drift, frequency drift due to voltage instability, etc. Nor is he apt to be sympathetic with the vagaries of fading signals and adjacent channel "monkey chatter." When his new receiver fails to produce pure and unadulterated music as every automatic push-button is pressed, he feels that he is not receiving his money's worth of radio performance or that the receiver has been improperly adjusted. Even a demonstration that no better reception of the particular station is possible by manual tune is apt to be too late to be convincing.

3. Allow the receiver to operate for at least fifteen minutes before making the station selector adjustments. This will allow the radio chassis to assume normal operating temperature with voltages at their final values. During this period the oscillator frequency gradually drifts as tuned circuit elements and tubes warm up, and their component parts expand. This precaution is particularly true with respect to the tuned circuit substitution types of receivers not equipped with AFC. As mentioned previously, certain parts of the receiver cause the oscillator to have a positive drift of frequency with increasing temperature and other parts cause the frequency to decrease with increasing temperature. These two effects unfortunately are not balanced. In some of the recent receivers as well as the band spread types, compensation is provided. In spite of this feature, it is wise to allow a reasonable warm-up time to elapse before making final adjustments.

4. Make a check-up trip to the customer after a few days have elapsed to correct any drift tendencies which may have made themselves evident due to mechanical and long-time aging effects. After this second adjustment most receivers will have reached a final condition of operation which will continue to give satisfactory performance. By providing a periodic check-up service, the customer will learn that he can expect continued satisfaction from his automatically-tuned radio receiver.

Section 7

THE MYE TECHNICAL MANUAL

Frequency Modulation

P. R. MALLORY & CO., Inc.
MALLORY

FREQUENCY MODULATION

The past year has witnessed the tremendous strides made by that new medium of communication, Frequency Modulation. Conceived by Major Armstrong and first promoted by him only a few short years ago, "F.M.," as it has become known to the public, has really put on radio's seven league boots and has grown from infancy to manhood almost overnight. As of the first of this year there were already about twenty-five F.M. stations on the air supplying commercial programs, together with about twelve more operating on an experimental basis. In addition, about forty more transmitters are under construction, and over fifty more had applications pending. Thus, barring the stoppage of transmitter construction because of war, before the end of 1942 F.M. reception will be available to the majority of radio listeners in every part of the country, many of whom have been hitherto deprived of satisfactory radio reception. This amazing growth can only be appreciated when the contrast between F.M. operation and the conventional amplitude modulated (A.M.) operation is understood. To that end this article will attempt to define Frequency Modulation, describe its operation, and analyze some of the components of current transmitters and receivers.

What Is Frequency Modulation?

By modulation is meant the variation of intensity, or frequency, or phase, of a steady signal by another signal which is itself varying with the impressed intelligence. For example, a radio station sends out a steady carrier during periods of no modulation, similar to a C.W. station, or signal generator output. When this steady carrier is amplitude modulated its intensity is varied at a rate corresponding to the frequency of modulation. Refer to Fig. 1, which shows a typical amplitude modulated wave with varying degrees of modulation. The upper drawing shows a steady or unmodulated carrier. Next the carrier is modulated 50 percent, which caused the instantaneous height of the wave to increase and then decrease as shown. A 100-percent modulation gives a 2-1 increase on peaks and a reduction to zero, while overmodulation causes the zero modulation period to be extended.

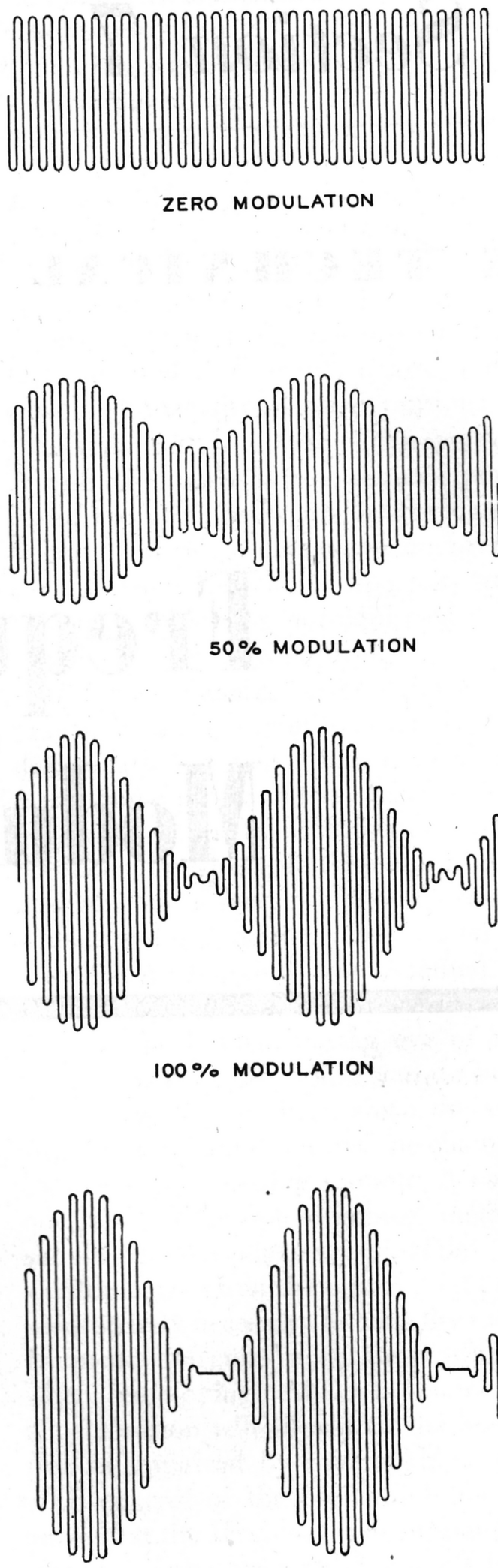

AMPLITUDE MODULATED SIGNAL WITH VARYING PERCENTAGE MODULATION

Fig. 1

Now refer to Fig. 2, which shows a similar set of modulation pictures for frequency modulation. In this type of transmission the amplitude remains constant at all times, but the carrier frequency is "wobbled" around at a rate corresponding to the modulating frequency, and to an extent depending upon the depth of modulation. Thus, if the unmodulated carrier is at 50 megacycles and a heavy modulation at 1,000 cycles is impressed upon it the 50 mc. carrier will be swung 1,000 times a second through the mean frequency of 50 mc., and the excursion each side of this mean frequency will be dependent upon the intensity of modulation, a total swing of 150 kc., in current practice corresponding to 100-percent modulation by the old method. Thus a very heavy modulation passage would possibly swing the carrier plus and minus 60 to 75 kc., a moderate passage 30 or 40 kc., while 10 kc. or so would correspond to a light passage. Phase modulation is similar in general to frequency modulation, but in this particular type the extent of the swing is dependent upon the modulating frequency as well as upon the intensity of modulation.

From the preceding rather sketchy description of types of modulation some of the major differences in the results obtained will become apparent. For one thing, the biggest advantage accruing to frequency modulation is its decisive noise reducing properties, the ability to bring in programs during the most severe thunder storms and under such conditions as make reception on conventional receivers impossible. This ability arises primarily from the fact that such noise pulses create an amplitude modulation of the transmitted carrier, but do not affect the transmitted frequency, which, in the case of F.M. transmission, goes merrily on its way with its wobbles undisturbed. If the receiver is unresponsive to amplitude modulation, translating only frequency

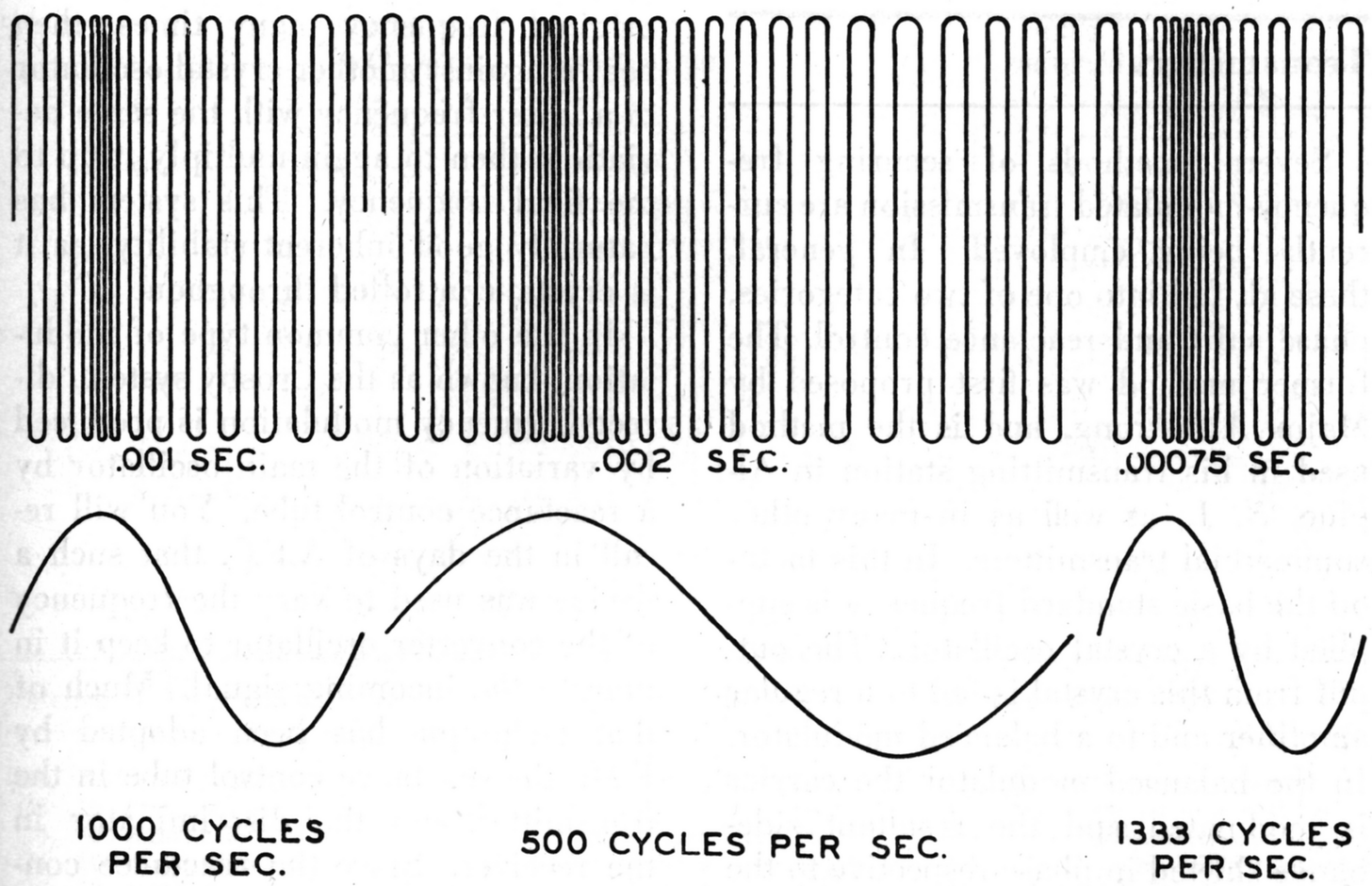

FREQUENCY MODULATION WITH VARIOUS MODULATING FREQUENCIES

Fig. 2

variations into sound output, these severe amplitude modulations will be ironed out and the reception will be perfectly normal. This ironing out is accomplished by the use of limiters and balanced discriminators, as will be described later, and it is these two portions of an F.M. receiver, not incorporated in A.M. reception, which turn the trick.

Another fundamental difference between the two modes of modulation affects the transmitter design. In amplitude modulation, as was seen in Fig. 1, the peak carrier power is caused to vary through very great extremes, up to four times the unmodulated level. This requires a reserve of power-handling capability in the transmitting equipment and, depending upon the method employed to modulate the carrier and the type of transmission used, the transmitter must be capable of handling from two to four times the rated power during modulation peaks. In F.M. transmission the carrier power remains unchanged during modulation, thus no excess capacity is required. Another definite advantage from the transmitter standpoint is that additions can be made to an F.M. transmitter with comparative ease, as the modulation is all done at low levels, consequently an increase in power output can be realized by the use of a simple power amplifier stage.

Another great advantage which has been instrumental in bringing F.M. to its present state is the greatly improved tone range possible with this medium. To understand this it is necessary to consider a bit in detail the sideband concept of transmission. In amplitude modulation a signal which is modulated at an audio rate will appear as a carrier, which is the same carrier as was transmitted alone during no-modulation periods, plus the sidebands produced by the modulation. These are two additional radiations spaced on either side of the carrier a distance equal to the modulating frequency, and of an intensity dependent upon the strength of modulation. Thus a 1,000 kc. signal modulated at 1,000 cycles will produce sidebands of 999 kc. and 1,001 kc., of intensity determined by the modulation depth. These three frequencies are transmitted to the receiving antenna, thence through the receiver to the detector, where they are recombined to form the original modulation. Obviously any discrimination against these sideband frequencies will produce a resultant when recombined differing from the original. In other words, distortion will now have been introduced. This sideband discrimination may take many forms. In the transmission from the transmitter to the receiver there may be multiple path transmission, causing a sideband distortion, with the resultant "selective fading" with which we are so familiar, and which renders a program unintelligible. In the receiver the selectivity of the various portions of the circuit usually produce sideband discrimination, consequently we lop off the higher frequency modulations which were originally present and the fidelity suffers accordingly.

The next aspect to consider is the available room in the broadcast spectrum. The present band extends from 550 kc. to 1600 kc. and, with stations separated 10 kc., there are only slightly over 100 channels available. This means, of course, that many stations share the same frequencies, with consequent interference on these frequencies in many regions. In addition the separation of 10 kc. limits the upper modulation frequency to 5,000 cycles, otherwise the transmission will splash over onto the next channel. Thus, between the limitation on modulation of the transmitter, plus the sideband cutting present in practically all A.M. receivers, high fidelity reception is out of the question.

On F.M., however, the story is entirely different. For one thing, the band utilized is in the high-frequency spectrum (we used to call these frequencies Ultra High, but in these days of micro-waves they're practically long waves) extending from 42 to 50 megacycles. In this region stations are separated by 200 kc., thus there are about forty channels available. While this is less than the available number of channels in the A.M. broadcast band another factor enters here which makes the picture entirely different. This is the well-known ability of an F.M. receiver to discriminate between two stations on the same frequency but differing in intensity by more than two to one, and to receive only the stronger station without interference from the weaker. Anyone who has tried to listen to an A.M. station with an interfering station many times weaker in the background can appreciate what a difference this is. As a result, stations in different geographical locations can be put on the same frequency with little danger of interference, and even in those localities where both stations are received with essentially equal strength, either may be chosen by the disposition

of the antenna. Thus the interference problem, long the bugbear of broadcast reception, is not present under F.M. reception.

The selective fading mentioned above is also not present on F.M. reception, primarily because of the band of frequencies used. At these frequencies transmission is essentially limited to the horizon, although good reception is constantly being obtained at distances considerably in excess of this. At these short distances, however, multiple path transmission does not occur, and this problem is not present. Another result of the same condition is that F.M. transmission knows no time limit, reception being the same in day or night, winter or summer.

With the available band width of 150 kc. (corresponding to 100-percent modulation) it is possible to transmit modulating frequencies up to 15,000 cycles on F.M. without distortion of the original. In F.M. transmission sidebands are also created, although they are shifted in phase relative to the carrier. For low modulating frequencies a great number of sidebands are created, separated by the audio frequency, but for high-frequency modulation they resolve themselves into two, as in the case of amplitude modulation. The above band will accommodate these sidebands without distortion, consequently it is possible to produce realism of tone in an F.M. receiver that is really startling.

Another distinctive feature in F.M. reception is the great dynamic range possible. In A.M. reception the lowest notes that may be transmitted are limited by circuit noise, tube noise, studio noise and a variety of other disturbances. In F.M. the great reduction in noise made possible by the proper use of amplitude limiters and balanced discriminators permits the lowest sound to be faithfully transmitted. It has been said truthfully of F.M. that it can transmit silence. Anyone who has attended symphony concerts and thrilled to the tremendous variations of intensity employed can easily appreciate the ability to get this range virtually unaltered in their own home.

The foregoing material presents the basic differences between A.M. and F.M. Immediately following are some of the details of current transmitter and receiver design.

Transmitters

Several methods of securing frequency-modulated transmission are currently being employed. In general, these all fall into one of two categories, phase shift and reactance control. The former method was first proposed by Major Armstrong, and is the method used in his transmitting station in Alpine, N. J., as well as in many other commercial transmitters. In this method the basic standard frequency is supplied by a crystal oscillator. The output from this crystal is fed to a regular amplifier and to a balanced modulator. In the balanced modulator the carrier is modulated and the resultant sidebands shifted in phase respective to the carrier. These sidebands are then recombined with the carrier, producing a frequency-modulated wave. In order to hold the distortion due to non-linear modulation to an acceptably low level, the phase shift, and hence the frequency deviation, must be kept quite low, although a system was recently described before the I.R.E. by Roger Pierracci whereby phase shifts of considerable amount are obtained. In order to obtain the necessary frequency deviation at the ultimate carrier frequency it is necessary to multiply the original frequency many times, then beat it against another crystal oscillator to a lower frequency with the same deviation, then to again multiply it up to the final frequency. This system has naturally good inherent stability, as it is crystal-controlled throughout.

In the other common type of modulation, known as the Crosby system, direct frequency modulation is produced by variation of the main oscillator by a reactance control tube. You will recall in the days of A.F.C. that such a device was used to vary the frequency of the converter oscillator to keep it in tune to the incoming signal. Much of that technique has been adopted by F.M., the reactance control tube in the transmitter and the discriminator in the receiver. Since the reactance control tube is a very handy tool to employ in many F.M. applications, and is the basis for many pieces of equipment it will be described in considerable detail.

Fig. 3 illustrates the basic design of a reactance controlled oscillator. Tube V1 is a conventional Hartley oscillator, with C1 and L forming its tuned circuit. Tube V2 is the reactance control tube and acts in the following manner to control the frequency of V1. The plate of V2 is effectively connected across the tuned circuit L C1, as is

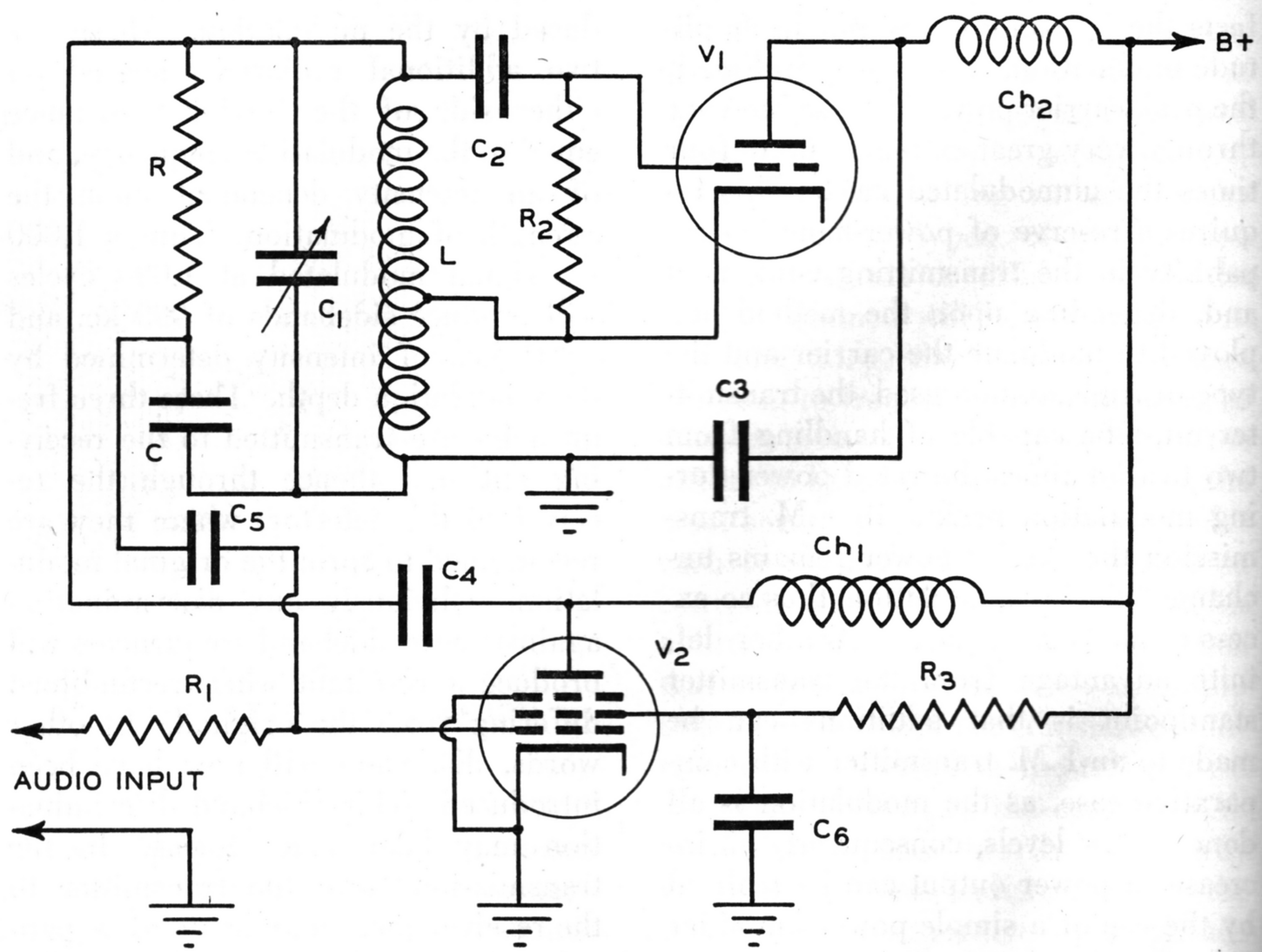

Fig. 3

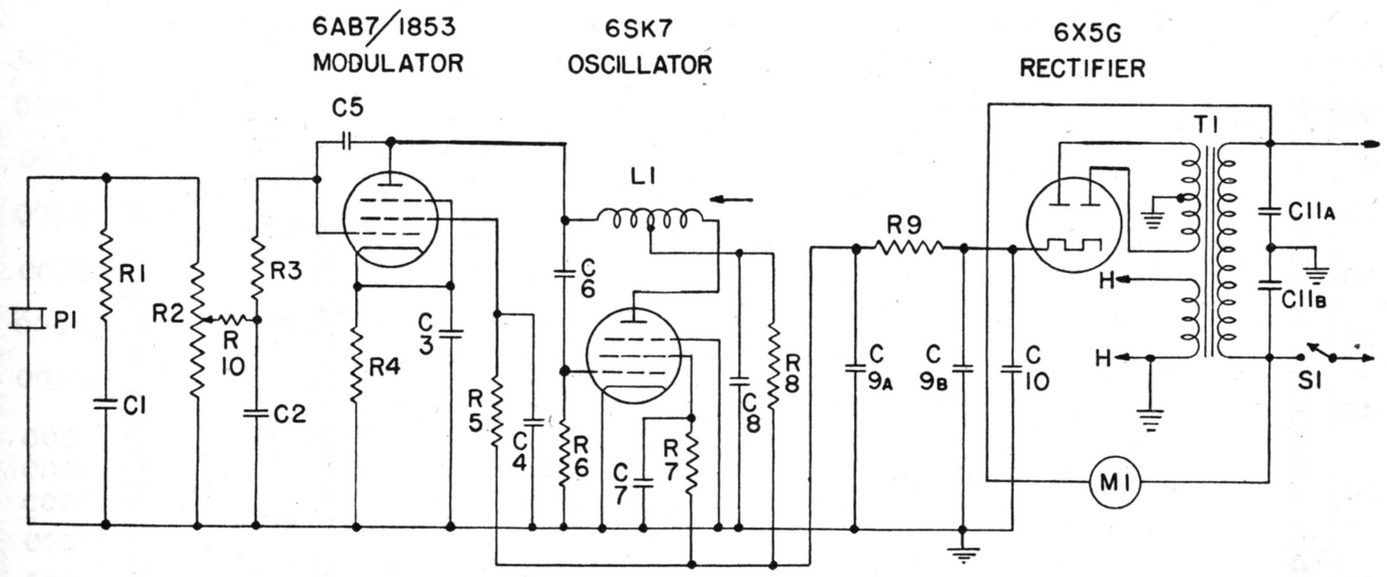

PARTS DESCRIPTION LIST

Symbol	Description	Symbol	Description	Symbol	Description
C1	.005 mfd. paper capacitor	C9b	10 mfd. dry electrolytic	R3	18 ohms carbon resistor
C2	100 mmf. mica capacitor	C10	.005 mfd. paper capacitor	R4	470 ohms carbon resistor
C3	100 mmf. mica capacitor	C11a	.01 mfd. line capacitor	R5	2,200 ohms carbon resistor
C4	100 mmf. mica capacitor	C11b	.01 mfd. line capacitor	R6	47,000 ohms carbon resistor
C5	10 mmf. mica capacitor	L1	Oscillator Coil	R7	2,200 ohms carbon resistor
C6	22 mmf. mica capacitor	M1	Phono Motor	R8	220 ohms carbon resistor
C7	100 mmf. mica capacitor	P1	Crystal Pickup	R9	3,300 ohms 1 W. carbon
C8	100 mmf. mica capacitor	R1	47,000 ohms carbon resistor	R10	10,000 ohms carbon resistor
C9a	10 mfd. dry electrolytic	R2	0.5 megohms volume control	S1	Power switch on vol. control
				T1	Power transformer

FIG. 4—*Schematic Diagram Model JM-31*

also a series circuit consisting of the resistance R and Condenser C, whose reactance is much less than R. Essentially, therefore, the current through C is in phase with the tuned circuit voltage, and the voltage across C 90 degrees out of phase with it. The voltage across C is applied to the grid of V2, its phase is again reversed in V2, and it is reapplied across the tuned circuit, 90 degrees out of phase. Thus the combination of R, C, and V2 acts as an inductance connected across the tuned circuit, the value of this inductance, and consequently the frequency to which the tuned circuit resonates, being dependent upon the gain of V2. Any variation of this gain will cause the frequency of the main oscillator to change. Thus, if an audio voltage is impressed upon the grid of V2, thereby causing its mutual conductance (Gm) to vary in accordance with this applied voltage, the frequency of the tuned circuit will be similarly varied and frequency modulation will be produced. Likewise, if a D.C. voltage is applied to this grid the frequency will take a fixed value depending upon this bias. This effect is utilized to correct drift in the main oscillator, in a manner similar to the correction effect obtained in the original A.F.C. circuit.

Fig. 4 shows the schematic of a wireless record player for F.M. employing this reactance control tube principle. Fig. 5 illustrates, in block diagram form, the system incorporating this device used to actually get frequency-modulated waves of high stability. The oscillator is modulated by the reactance control tube as explained above, and is then doubled in frequency. This doubled frequency is now combined with the output of a reference crystal oscillator, and the beat thus obtained is amplified and applied to a discriminator, in familiar A.F.C. technique. As long as this beat or I.F. frequency is the proper value, the D.C. voltage developed by the discriminator will be zero, but if the modulated oscillator should depart from its proper frequency, the I.F. will be caused to likewise depart from its normal frequency. This will result in the creation of a corrective D.C. voltage by the discriminator, and this D.C. voltage, applied to the reactance control tube, will swing the frequency of the modulated oscillator back to its proper frequency. By this method, the output frequency may be maintained to a constancy easily as good as a crystal controlled oscillator.

In another method of control employed by Western Electric the beat between the output and a reference oscillator is divided several times until it becomes sufficiently low to actuate a control motor. This motor operates a tuning condenser which corrects the oscillator frequency and restores it to its proper value.

In both of these systems, low pass audio filters are employed so that the frequency-stabilizing circuits are not responsive to the intentional frequency variation caused by modulation, and therefore the frequency-correcting circuits respond only to the average deviations from the desired value.

One feature of present-day F.M. practice is the rating of transmitters by service areas instead of by power as previously. This means that when a transmitter is licensed, its guaranteed service area, within which the signal strength must not fall below 50 microvolts per meter, is rigidly specified. Thus the user of an F.M. receiver

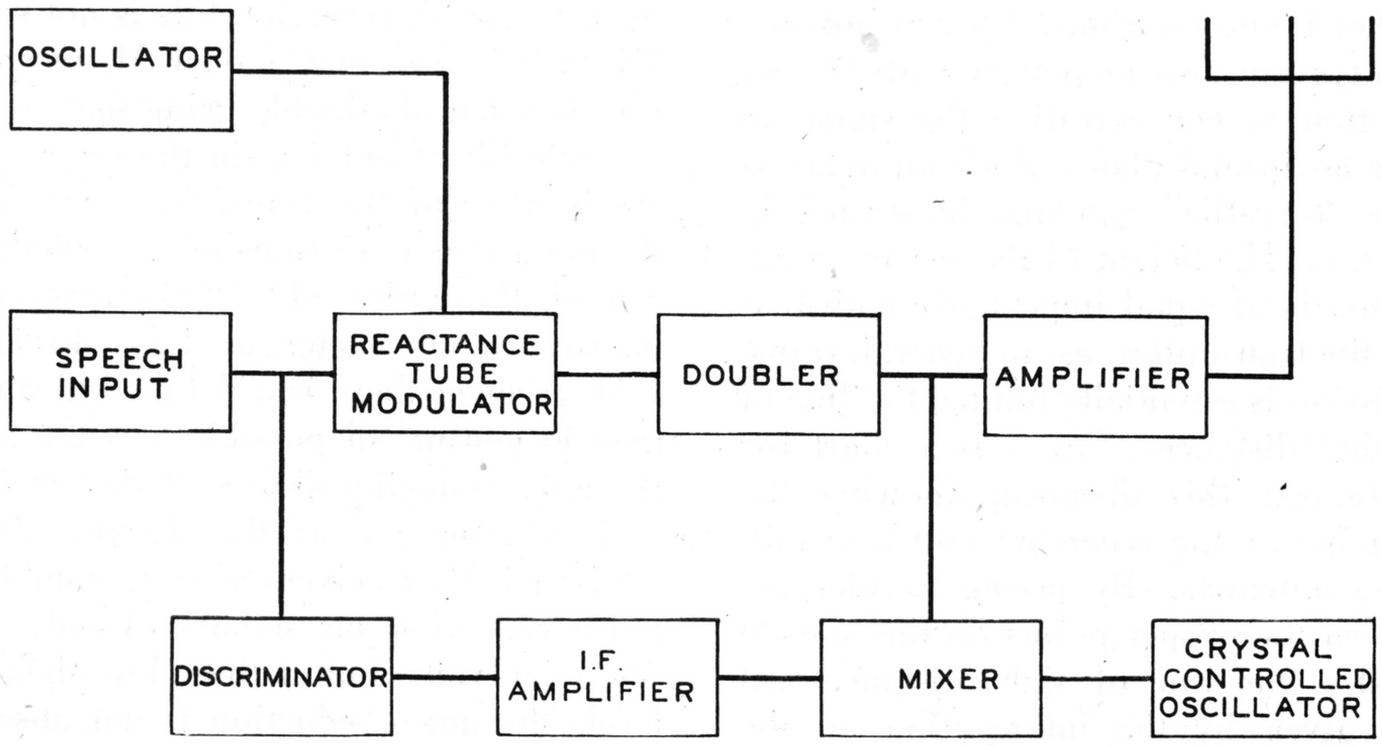

FIG. 5

knows that he should get adequate reception from all stations within whose service areas he resides. In order to get as great a coverage as possible

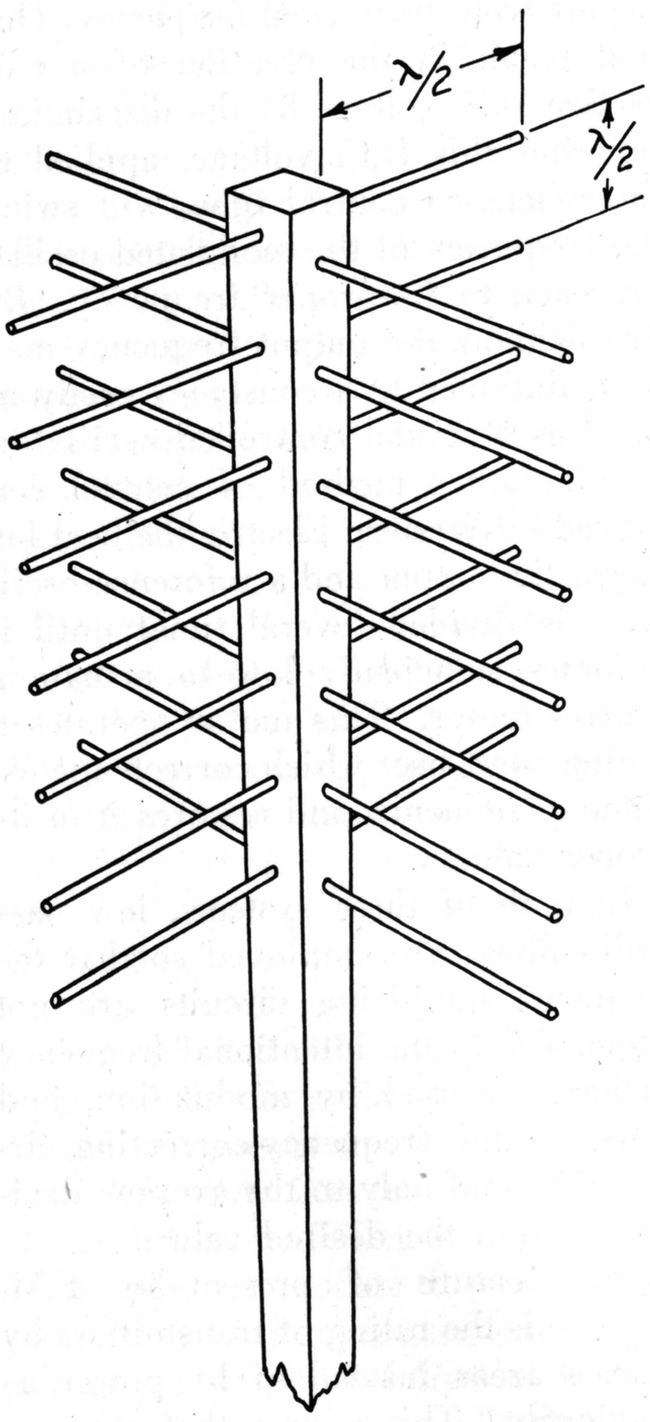

Fig. 6

transmitting antennas are usually located on tall buildings, mountains or other high elevations. Special antenna arrays are also employed with the intention of concentrating the signal in the horizontal plane. Such an array is the "turnstile" antenna, illustrated in Fig. 6. The height of the receiving antenna is of equal importance with that of the transmitter, as, in general, transmission is essentially limited to "line of sight" distances. Fig. 7 is a chart for obtaining this distance, knowing the heights of the receiving and transmitting antennas. By laying a ruler between the proper points on the outside scales, the line of sight distance will be given by the interception on the middle scale.

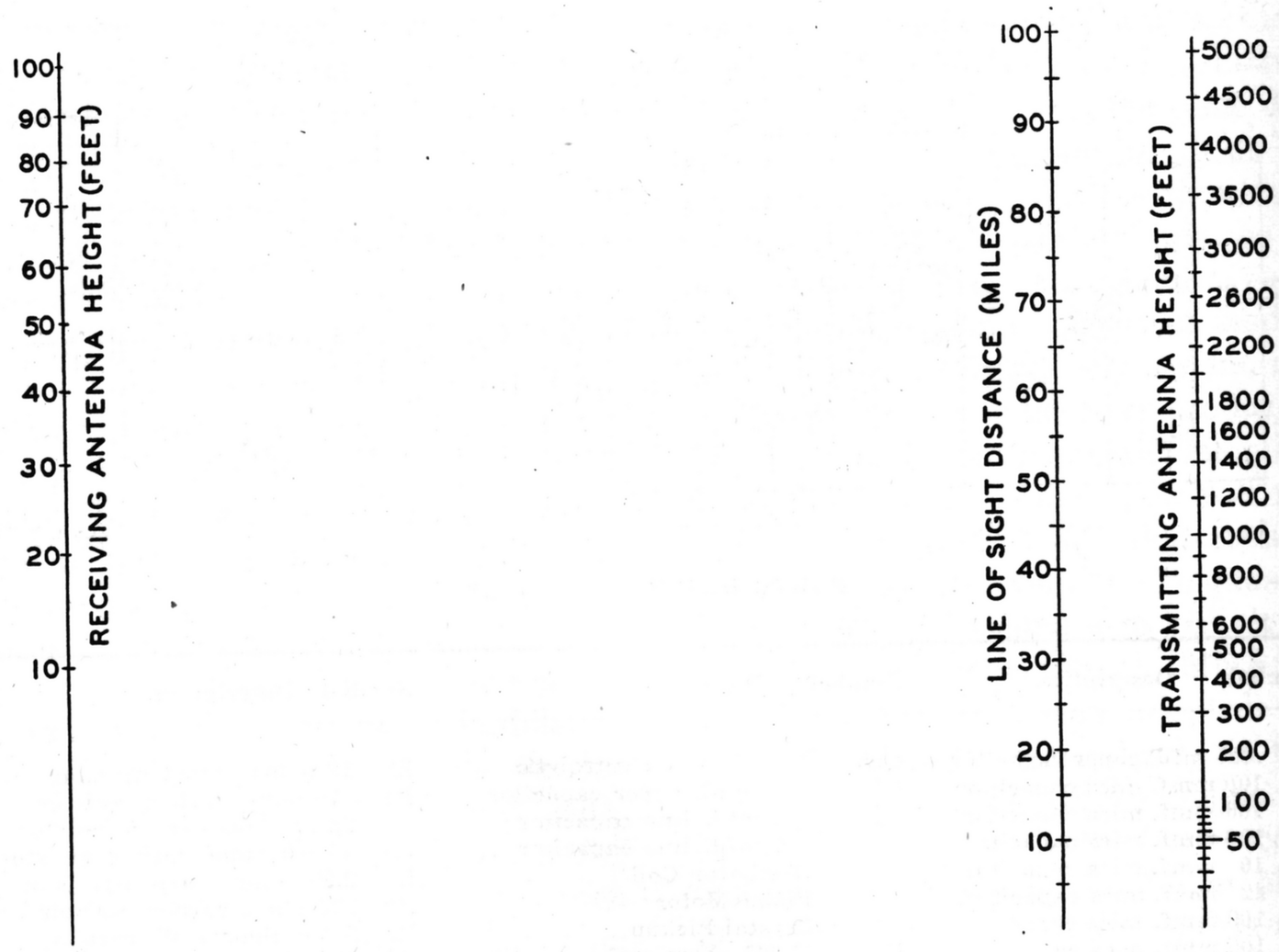

Fig. 7

Receivers

The design of a receiver for F.M. is similar in many respects to that employed in A.M. practice, but is somewhat more complicated. The superheterodyne circuit is used universally, but the different frequency coverage brings in many variations from usual A.M. practice and, in addition, there is included such features as limiters, discriminators, etc. Let us start at the antenna end of an F.M. receiver and discuss the salient design points of the various major component divisions.

In standard broadcast reception a makeshift antenna is frequently adequate; in F.M. reception this is not so. While it is true that good F.M. reception is often obtainable using the least possible bit of antenna in the immediate locality of the transmitter, out in the more remote sections field strengths are of the order of a few hundred microvolts per meter or less. In an F.M. receiver there is a definite advantage in getting all possible pick-up, as the noise-reducing ability of the set is a direct function of this factor. All modern F.M. receivers give acceptable noise reduction on signals of only a few microvolts, but at these low signal levels the noise reduction is not absolute. Thus any improvement in the signal delivered by the antenna to the receiver proper means just that much more increase in the signal to noise ratio, until ultimately we reach the level at which reception is practically noise free. For this reason most up-to-date F.M. installations utilize dipole antenna installations. This consists of a horizontal rod assembly, cut in the middle, one-half wave length long (about 11½ feet), and connected to the receiver by a twisted pair transmission line. Such an antenna is most receptive to signals coming from a direction at right angles to its plane, a fact which is of great value in those areas where two stations of the same frequency and essentially equal strength are received, as previously described. By orienting the antenna to favor pick-up from one station over another the favored station alone will be received devoid of interference. In cases where most of the desired stations are in one general direction and more pick-up is desired, a reflector may be added. This consists of another half-wave rod located a quarter wave length behind the other, in a direction away from the desired stations. This is frequently done in television reception, but is usually not advisable in F.M. installations, as it reduces the reception in the other direction. Many of the modern F.M. receivers incorporate built-in folded dipoles in the cabinets.

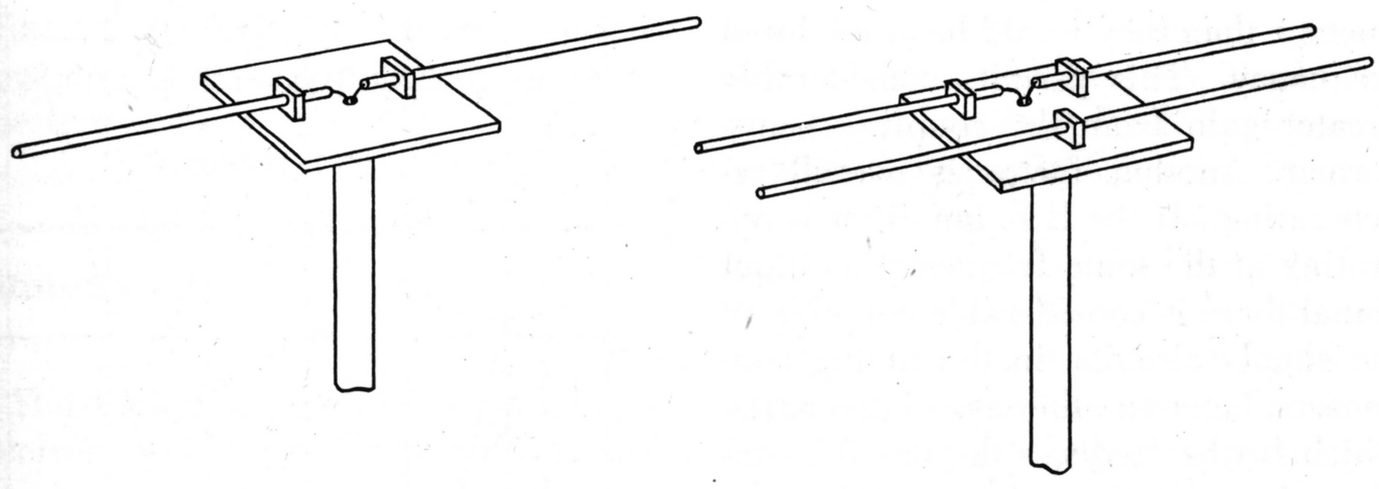

Fig. 8

These antennas, or other similar pick-ups, will be found generally acceptable in the strong field strength localities, as, for example, in Metropolitan New York City. For more remote installations more elaborate dipoles may be added. Fig. 8 illustrates the construction of dipoles and reflectors as described above.

The R.F. end of an F.M. receiver has somewhat the same functions to perform as in an A.M. receiver, but the relative importance of the various factors is different. For example, I.F. rejection is of lesser importance, mainly because of the usual choice of an I.F. which is generally interference free. Image rejection in itself is not so important, as the current choices of I.F. place images of F.M. stations outside the band; however, the R.F. selectivity, which would determine the image rejection, is of importance in reducing other spurious response points. The major function of the R.F. end of the receiver is to add as much as possible to the stable gain of the set, so that sensitivity shall be high, with attendant good signal-to-noise ratio. There is a definite limit to the amount of stable gain which can be incorporated in an I.F. amplifier without excessively elaborate shielding and filtering, consequently the more gain which can be obtained from the R.F. amplifier and the converter the better.

The R.F. end of the set has generally fallen into two categories in current receivers. Most manufacturers use a more or less conventional type of R.F. amplifier, wherein the R.F. tube is usually one of the high mutual conductance types, the amplification is done at the input frequency (42-50 mc.) and the amplified signal is then reduced to the I.F. in the converter. Converters may be of types similar to those used in broadcast practice, with one tube performing the dual function of oscillator and modulator, or separate tubes may be used for these functions. In the latter case a high Gm tube is usually used for the modulator, or "mixer," tube, and a separate triode for the oscillator. This has several advantages. For one thing the resultant sensitivity is excellent, as such a combination has probably the highest transconductance. In addition good frequency stability is possible, as the best tube for the oscillator from this standpoint may be chosen, properly located and properly compensated.

Where even higher sensitivity is desired a dual superheterodyne is used. In this system the incoming signal at 42-50 mc. is first heterodyned down to a moderately high I.F., amplified at this frequency, then heterodyned again to the lower or usual I.F. This permits of higher overall gain because relatively few tubes are working at the same frequency, consequently the problems of regeneration are not so severe. Receivers of this type have been constructed which will give acceptable noise reduction on inputs of the order of a tenth of a microvolt.

General Electric has developed a modification of the dual superheterodyne which employs the same number of tubes as a conventional R.F. amplifier—single converter combination, yet permits considerably higher gain. The basic portion of this circuit is illustrated in Fig. 9. In this arrangement a variable first, or higher frequency, I.F. is used, the same oscillator being used to beat the incoming signal to this frequency and then to beat it down again to the final I.F. The operation of this circuit may be understood from the following, together with the equations and references on Fig. 9:

Let us assume an incoming signal of 46 mc. The input circuit, L1 and C1, is tuned to this frequency, and the signal is then applied to the grid of the first converter V1. Tube V3 is a conventional triode oscillator, utilizing the Hartley circuit, and is tuned to a frequency of 20.85 mc. by L3, C3. L3 is

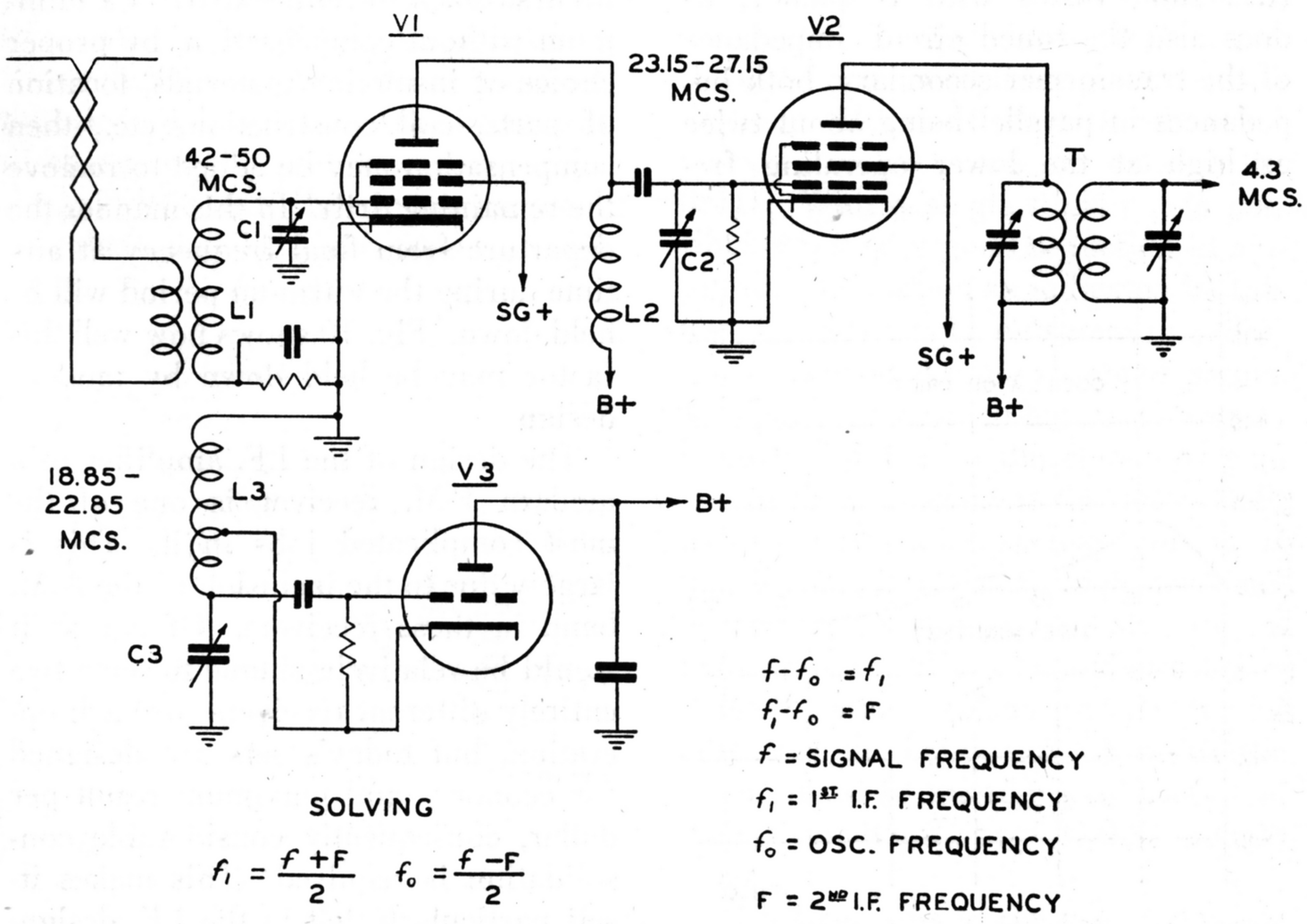

Fig. 9

magnetically coupled to L1, consequently tube V1 has impressed on its grid, oscillator voltage of frequency 20.85 mc., in addition to the 46 mc. signal. These two frequencies are mixed in this tube and the difference, 25.15 mc., is produced. Tuned circuit L2, C2 is resonant to this frequency, and also passes along the oscillator voltage, supplying tube V2, the second converter, two signals of frequency 25.15 mc. and 20.85. These are mixed in this tube, and the difference, 4.3 mc., is produced and passed along to the I.F. amplifier by the first I.F. transformer T. Thus as long as the oscillator is of frequency equal to one-half the difference of the incoming signal and the final I.F., and the intermediate tuned circuit L2, C2, is resonant to one-half the sum of these frequencies, this system will function properly.

This system is capable of greater gain than a conventional R.F. stage for several reasons. First, the R.F. stage (considering the plate circuit of V1, the coupling transformer and the grid circuit of V2 to be an R.F. stage) is working at about half the frequency of a conventional R.F. amplifier and, since the maximum theoretical gain with stability of an R.F. stage is proportional to the square root of the reciprocal of frequency this means a very considerable increase in gain. Secondly, the input impedance of a converter or R.F. tube varies with frequency, as does also the tuned circuit impedance of the transformer secondary, both impedances in parallel being about twice as high at the lower operating frequency, than they would be at the input frequency. This permits considerably greater gain from the coupling transformer. Another factor is overall regeneration. If the R.F. amplifier is operating at the same frequency as input signal there is considerable coupling in the supply circuits, in the tuning condensers, between other associated parts, which further reduces the possible stable gain. All these factors taken together result in a gain of about four to one due to the use of a dual super in this circuit over a conventional R.F. amplifier.

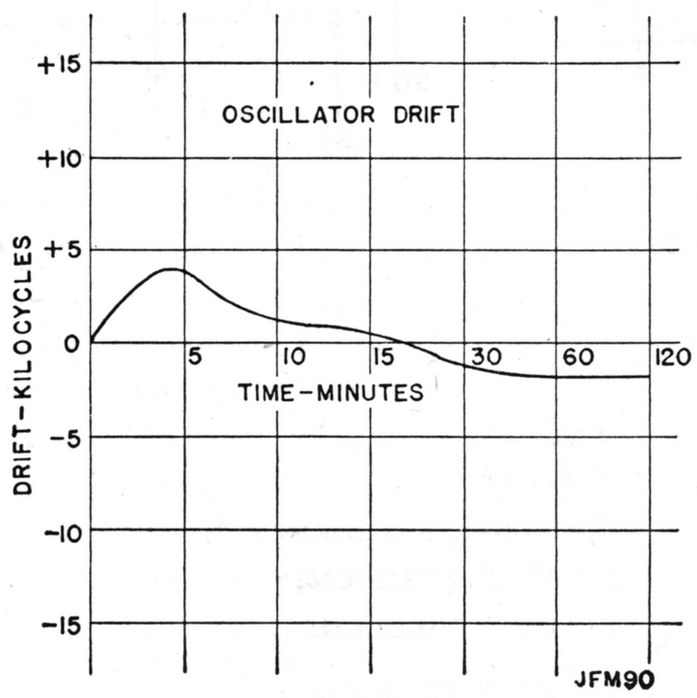

Fig. 10

The converters used in these modern F.M. sets differ from conventional A.M. practice mainly, as pointed out above, in the usual use of separate oscillators and of compensation to reduce frequency drift. This compensation takes the form of small ceramic capacitors connected across a portion or all of the oscillator tank circuit. When properly located so that they will heat up at about the same rate as the principal components of the oscillator tank (coil, gang, trimmers, etc.), they will cause a reduction in tank capacity sufficient to balance the increase in the capacity of the above-mentioned components, with the result that the frequency stays very uniform, and it is not necessary to retune the set after it heats up. Incidentally, it should be pointed out that best practice dictates that every precaution be first taken to reduce drift to a minimum without compensation, by proper choice of insulating materials, location of parts, coil construction, etc., then compensation may be added to remove the remaining drift. In this manner the departure from final frequency at any time during the warm-up period will be held down. Fig. 10 shows how well this factor may be held down by modern design.

The design of the I.F. amplifier of a modern F.M. receiver is one of the most complicated jobs in it. This is largely due to the inclusion of the A.M. band in these receivers. Of course it would be relatively simple to have two entirely different receivers for each operation, but today's sets are designed for economy and maximum result per dollar, consequently considerable consolidation is required. This makes itself particularly felt in the I.F. design, as here we must pass both the A.M.

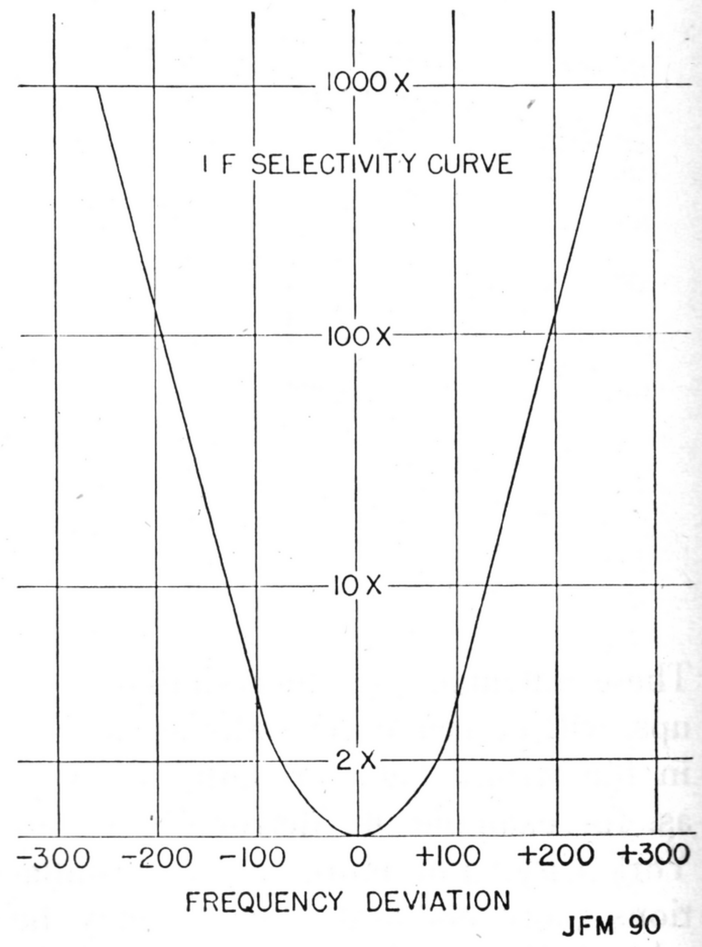

Fig. 11

I.F., usually 455 kc., and also the F.M. I.F., ordinarily 4.3 mc. or higher. The choice of the F.M. I.F. involves many factors, such as spurious responses, image responses, sensitivity, stability, cost, etc. In general the majority of sets at present use an I.F. of 4.3 mc., but there is some tendency to go to considerably higher frequencies than this on the more elaborate sets.

In practically all sets the I.F. transformers comprise units for both I.F.s connected together, usually with the various windings in series. This means that the I.F. system will respond to either frequency, although in the broadcast band it is customary to short out the F.M. winding on at least one transformer to prevent the second harmonic of the oscillator from blocking the I.F. tube. High Gm tubes are usually used in modern sets, permitting a very high amplification to be obtained. Originally it was thought that the I.F. system for an F.M. set needed to be flat topped. Present-day practice relies on the limiters to smooth out any amplitude modulation introduced by the I.F. system, and uses I.F. transformers set at about optimum coupling, with the overall selectivity down 2-1 at about ±75 kc. This is illustrated in Fig. 11, which shows the selectivity of the G.E. translator, model JFM 90. This receiver actually has selectivity in excess of current needs, as it was introduced at the time when local stations were still on

adjacent channels, and current conditions do not require quite as good skirt selectivity.

Limiters

The limiter is one part of an F.M. receiver design not found in conventional broadcast receivers, although noise limiters have been used in deluxe sets and communication receivers. The limiter forms one of the most important factors in obtaining the great improvement in performance of F.M. over A.M. Limiters are largely responsible for the outstanding ability of an F.M. set to reduce the noise background to practically the vanishing point, for, though noise reduction is also contributed by the discriminator at balance, as will be described later, when the frequency swings away from the mid-frequency, any amplitude noise present can then come through, and consequently will make itself apparent as noise distortion on modulation. Limiters are the reason an F.M. set can discriminate between two stations on the same frequency as long as they differ in strength by about 2-1. They contribute tremendously to the ability of an F.M. set to reject static, both natural and man-made. Actually, two factors which Major Armstrong originally established as essential to proper operation of an F.M. receiver were the wide frequency swing and the use of a limiter.

A limiter is essentially an amplifier stage which saturates at a certain level. It may be likened to a dam, which allows the level of the water in a reservoir to rise to the overflow level, then maintains a constant level regardless of how much water is poured in. Limiters in general work on two principles, grid rectification and current limitation. In the former type a fairly high resistance is incorporated in the grid circuit, shunted by a small capacitor. No fixed bias is supplied this grid, consequently it will draw grid current upon the application of a signal. This current flows through the grid resistor and the resultant bias reduces the gain of the tube and maintains a fairly constant output. This sounds much simpler than the actual operation of this device really is. To elaborate on the operation of this apparently simple device let us consider the circuit of Fig. 12, which shows two limiters in cascade. Consider, for the time, only one of these limiters. Let us assume an I.F. signal of several volts is impressed on the grid of this tube. This strong signal will charge up the condenser C1, in the low side of the grid return, to approximately the peak amplitude of the signal. Condenser C1 will in turn discharge through its shunt resistor R1, but, since this resistor is usually fairly high, the discharge rate is slower than the charge rate through the tube, consequently a steady bias will build up on the grid. With this bias on the tube nearly equal to the peak of the impressed signal, the grid will swing positive only on the peaks, for relatively short durations. The length of these durations will depend upon the rate of discharge of the grid condenser C1 by the grid leak R1. Thus in the plate circuit there will be a succession of current pulses, the height and width of which depend upon the applied input signal and the grid circuit time constant (product of R1 and C1). If this time constant is properly chosen it will be found that, over a considerable range of input signals, the width of these plate pulses will vary inversely as their height, i.e., an increase in input signal causes the plate pulses to become higher but slimmer. The average value of these pulses remains practically constant over this range, with the result that any amplitude variation present on the grid will not appear in the plate circuit.

This phenomenon may be demonstrated in a very interesting manner by reconnecting the discriminator circuit of the F.M. receiver as a conventional amplitude detector and impressing an amplitude modulated signal on the grid of the limiter. For low inputs it will be noted that the output increases linearly as the input level is raised, indicating no limiting. Then the output will start to level off, then drop, and finally it will be noted that for certain conditions of grid circuit time constant, screen and plate potentials and regulation, etc., the amplitude modulation will practically vanish. Above this input it will usually increase again somewhat, and then once again reduce to a very low value. Thus when using a tube such as the 6SH7 in a single limiter with values for C1 and R1 of about 30 mmf. and 150,000 ohms, respectively, it will be noted that these points of best limiting will fall at about 1 volt and 7 volts, respectively, on the grid of the 6SH7. With a single limiter it is possible to get very good reduction in amplitude modulation as indicated by this test, but not really outstanding reduction except at the above noted points. Another factor which has an extremely important effect on the choice of grid circuit time constant is the susceptibility to impulse noise, such as ignition. If the time constant is too high, i.e., condenser or resistor too great, the impulse noises will not be sufficiently restricted. This requirement usually dictates that the condenser C1 be of the order of 20-40 micro-microfarads and the resistor R1 of about 50,000-150,000 ohms.

This brings us to the use of dual or cascade limiters. As was pointed out

CASCADE LIMITER

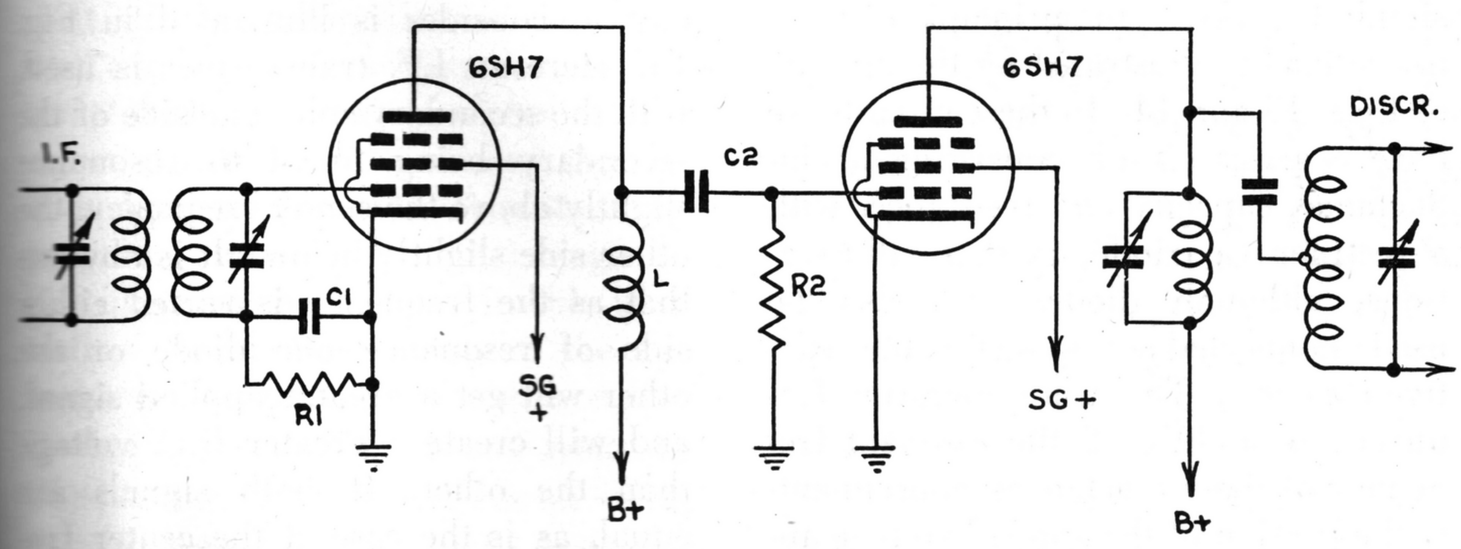

Fig. 12

a single limiter usually has one or more input levels at which it is really effective, one volt or seven volts in the case given. If two limiters are used in tandem, and the first adjusted to limit in such a manner as to put this critical input, say seven volts, on the grid of the second limiter for most values of input signal above the limiting level, it is obvious that well-nigh perfect limiting is possible, and this is the case. The value of inductance of coil L in the plate circuit of the first limiter is such as to resonate with the tube plate capacity and associated shunt capacities to the I.F. frequency, and its Q is made of such a value (as, for example, by shunting it with a resistor) as to make the gain from the grid of the first tube to that of the second just the correct amount to place an input of about 7 volts on this second tube over that range of input signals on the first tube for which it is effectively limiting. The first tube is therefore working at a range of inputs over which it has acceptable limiting, and is holding the second limiter on that point for which it has very good limiting. Thus the use of two limiters doesn't merely double the signal to noise ratio; it increases it manyfold. Returning to our original simile a cascade limiter is like the water from our constant level reservoir supplied through a small pipe in such manner that the flow must always be constant.

In the cascade limiter there is more latitude of time constant, and one limiter may be made to be especially effective to impulse noise, or both may be, depending upon how perfect limiting on regular steady noise is desired. On G.E. model JFM 90, for example, C1 is 47 mmf., R1 47,000 ohms, C2 is 22 mmf., R2 180,000 ohms. Referring again to Fig. 12 it will be noted that there is considerable gain in the first limiter, particularly at levels below its limiting threshold. The RC circuit of the first limiter may be broken up, with the condenser C1 on the high side of the transformer and the leak R1 between grid and ground. Occasionally it is better this way, as it reduces the capacity across the leak by the amount of strays in the transformer.

In the other basic type of limiter, screens and plates are operated at very much reduced potentials, so that a small signal will produce current saturation. In general operation it is quite similar to the grid bias type of limiter, and the same advantages accrue here due to the use of two limiters in cascade. In general it will be found that more sensitivity may be obtained with the grid bias type of limiter, particularly at low input levels where limiting is just beginning to take hold, as at these levels the two limiters are acting similar to regular I.F. stages, and while the reception of signals in this "twilight" zone does not represent good F.M. operation, it still often gives usable intelligence, particularly in contrast to A.M. reception.

Incidentally it should be mentioned that in general, best results in limiters are obtained with sharp cut-off tubes, and that high Gm is desirable here, too. Recently such tubes as the 6SH7 and the 7T7 have become available, and the use of these tubes has correspondingly lowered the requisite input level at which limiting now takes place.

Discriminators

It will be recalled that the older A.F.C. systems employed a device which translated the variations in frequency into D.C. potentials, which in turn were applied back to the reactance control tube to restore the oscillator to its proper frequency. This device was termed a discriminator, in that it discriminated between signals of different frequency. This same device is now used in similar manner in F.M. receivers, to transform the F.M. signal which is being wobbled in frequency, into an audio variation corresponding to this wobble.

In general there are three different types of discriminator circuits. The simplest works on the principle of resonance, and is illustrated by the circuits of Figs. 13 and 14. In these circuits we have a series circuit consisting of inductance, capacity and resistance, with a rectifier (a triode, in these illustrations, although diodes can also be used) connected across one of the reactive elements. The mean operating frequency is slightly off the resonant frequency of these reactances, consequently the portion of the applied voltage appearing across the rectifier will be de-

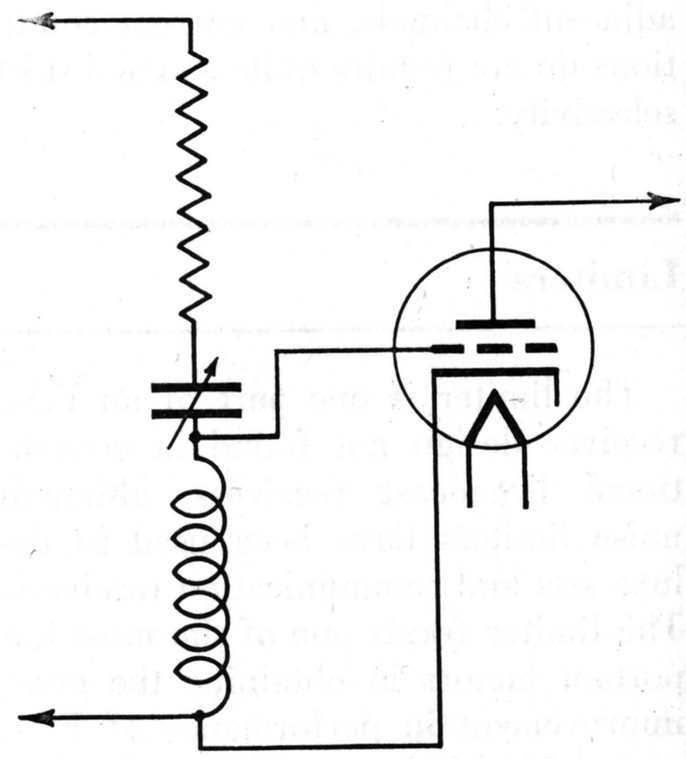

Fig. 13

pendent upon the frequency. The circuit of Fig. 13 is not balanced, i.e., only one rectifier is used, consequently the output will be dependent upon signal level as well as upon frequency. As a result such a circuit is susceptible to noise modulation of the carrier which may succeed in getting through the limiters. The circuit of Fig. 14 is balanced so that at the center frequency no voltage appears across the output terminals, and hence noise is balanced out during quiet passages. Another type of tuned circuit discriminator uses two diodes, one across the inductance, the other across the capacitor, with the two load resistors in series. This is also balanced to noise. In general it may be noted that any type of dual discriminator wherein equal voltages are impressed on the two rectifiers at the operating center frequency, will be noise balanced. These tuned circuit types of discriminators, while interesting, are comparatively low in audio sensitivity, and are consequently not used in current designs.

The next type of discriminator circuit to consider is illustrated in Fig. 15. Here an I.F. transformer is used, with the secondary split, one side of the secondary being tuned to resonance slightly above the center frequency, the other side slightly below. It is obvious that as the frequency is varied either side of resonance one diode or the other will get a greater applied signal, and will create a greater D.C. voltage than the other. If both signals are equal, as is the case at the center frequency, the D.C. output is zero, as the

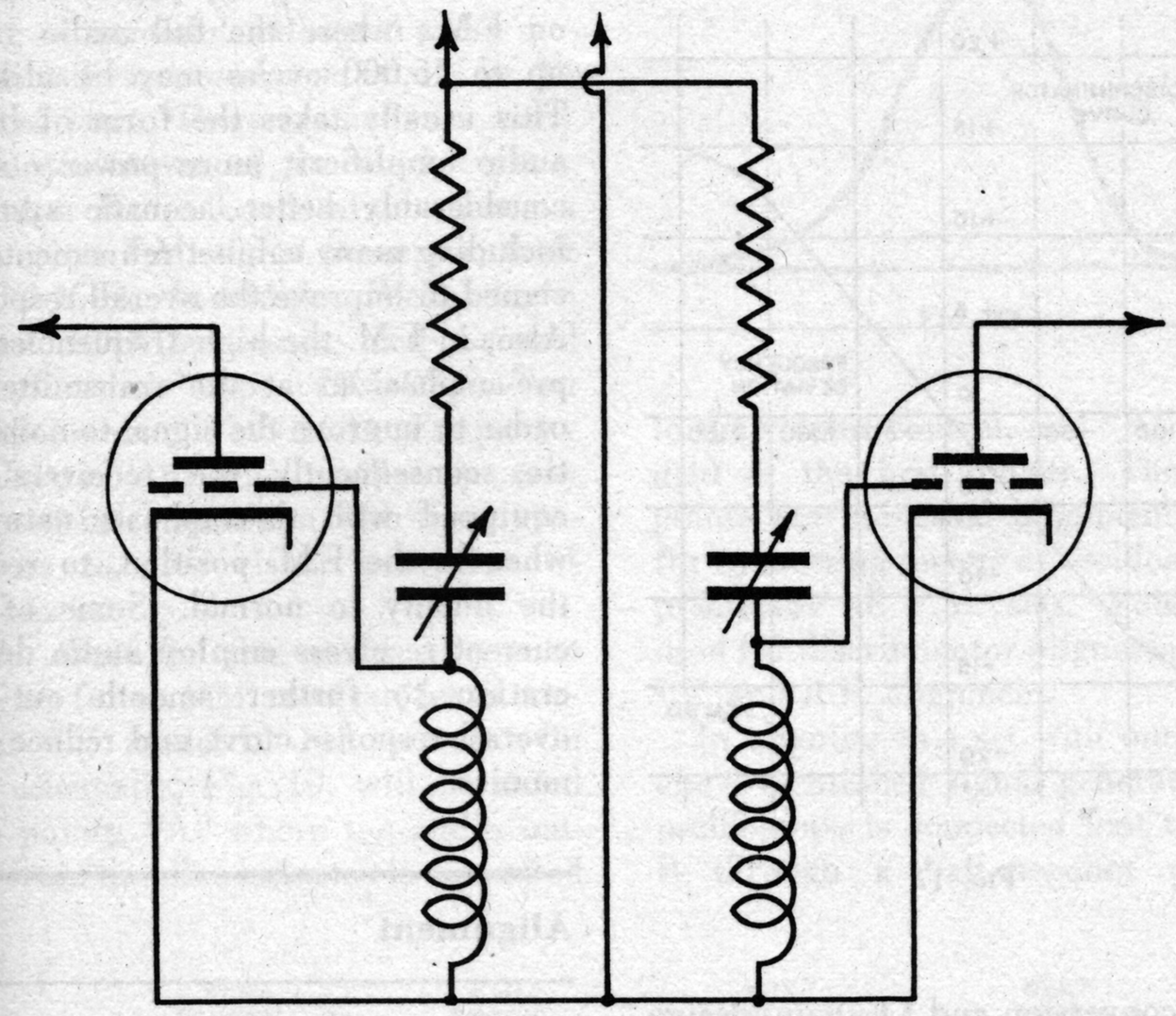

Fig. 14

two series voltages are then equal and opposite. If the upper diode gets the greater voltage the output will be negative, or positive if the lower diode gets the higher signal voltage. Thus the voltage appearing across the series load resistances will be an audio voltage corresponding to the F.M. signal modulation, and may be applied to an audio amplifier. This type of discriminator was extensively used in the earlier days of A.F.C., but has the disadvantage of being more difficult to align, and has been displaced by the phase shift type to be described next.

In the third basic type of discriminator, and the one used almost entirely today, the phase shift between primary and secondary of an I.F. transformer is utilized. Fig. 16 shows a typical phase shift discriminator. It will be noted that a more or less conventional I.F. transformer is used, provided with a center tap, which is connected through a blocking condenser to the plate of the preceding tube, and also through an R.F. impedance (a choke in this illustration) to the center tap of the two resistors in series. The audio output is obtained across these two resistors. The manner in which this circuit works is very interesting and will be described in detail.

With the applied frequency of a value to which both primary and secondary are resonant, the voltage appearing across the secondary (E1 plus E2) will be 90 degrees out of phase with the primary voltage Ep. This follows from the fact that the secondary at resonance reflects only a resistance to the primary, consequently the current through the primary inductance will be 90 degrees out of phase with the applied voltage. The induced voltage in the secondary circuit is again 90 degrees out of phase with the primary current, and finally the voltage across the secondary tuning capacity is 90 degrees out of phase with the secondary current, which is in phase with the induced voltage. The resultant of these four relationships is a total shift of 90 degrees between primary and secondary voltage at resonance.

Since the top of the primary connects to the center of the secondary, the primary voltage acts in series with

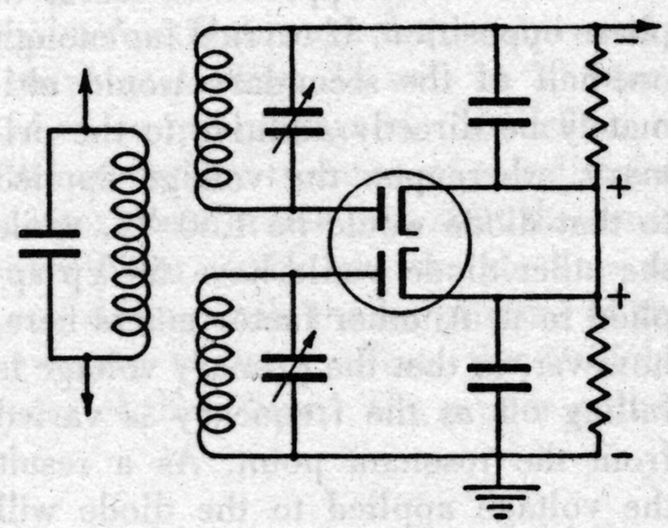

Fig. 15

one-half of the secondary voltage on one diode, and in series with the other half on the other diode. Thus the resultant voltage on each diode is the vector sum of two voltages in phase quadrature at resonance. On one diode the secondary voltage leads the primary voltage by 90 degrees as viewed from the diode, on the other it lags. If we assume, for the purposes of illustration, that the primary voltage equals the total secondary voltage, the voltage on each diode at resonance would then be approximately 1.12 times the primary voltage (square root of the sum of the squares of Vp and Vp/2).

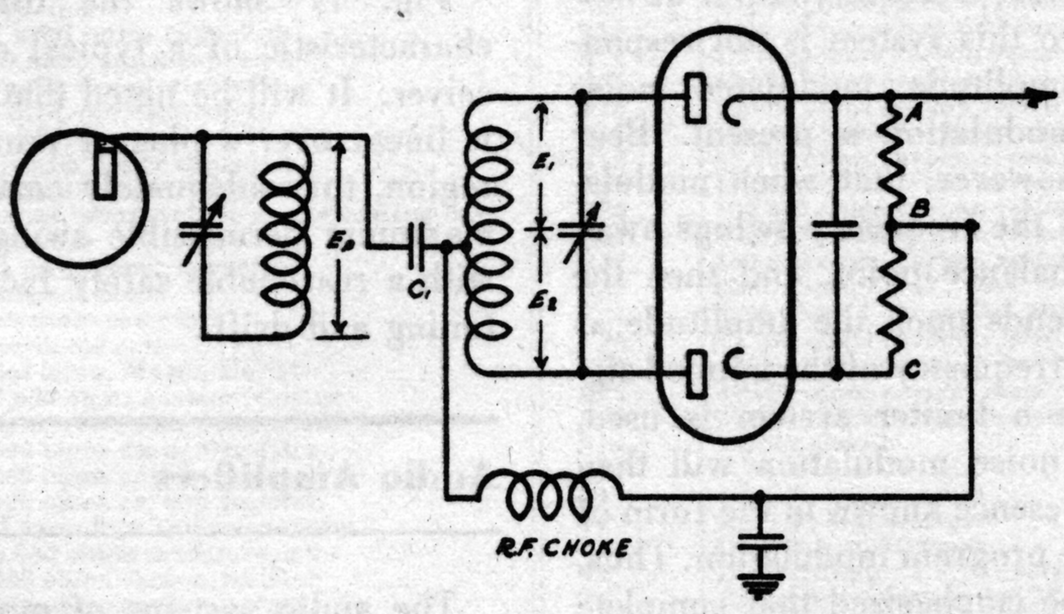

Fig. 16

As the frequency departs from resonance the secondary voltage also departs from this 90-degree phase relationship with the primary, approaching either zero or 180-degree phase shift with the primary applied voltage, depending upon which way the frequency shifts. In this event the voltage in one-half of the secondary will approach nearer to being in phase with the primary voltage, while the voltage of the other half approaches nearer to phase opposition. If carried far enough one-half of the secondary would ultimately be directly additive to the primary, whereupon the voltage applied to that diode would be 1.50 Vp, while the other diode would have .50 Vp applied to it. Another factor enters here, however, in that the primary voltage is falling off as the frequency is varied from the resonant point. As a result the voltage applied to the diode will increase at first as the frequency is changed due to the phases of the two component voltages approaching equality, then will reach a peak value, and finally decrease as the frequency is further changed, due to resonance. Simultaneously the voltage across the other diode will be decreasing, consequently the D.C. voltage across the two diode loads connected in series will vary through zero to plus or minus as the frequency is varied, thus developing an audio voltage corresponding to the modulation, which is passed on to the subsequent amplifier. This type of discriminator has the highest degree of sensitivity, as the output is obtained as the difference between two equal and quite large voltages, so that relatively small variations in these voltages result in really considerable outputs. Also, since the output at balance is zero this system is not responsive to amplitude modulated noise when no modulation is present. Bear in mind, however, that when modulation occurs the frequency swings away from the balance point, and then the output depends upon the amplitude as well as the frequency of the applied signal. Unless a limiter system is used, amplitude noise modulation will then make its presence known in the form of hash on the program modulation. Thus, it should be emphasized that complete noise reduction depends upon a great many things, signal strength, R.F. sensitivity, conversion and I.F. gain, design of the limiters and the type of discriminator used.

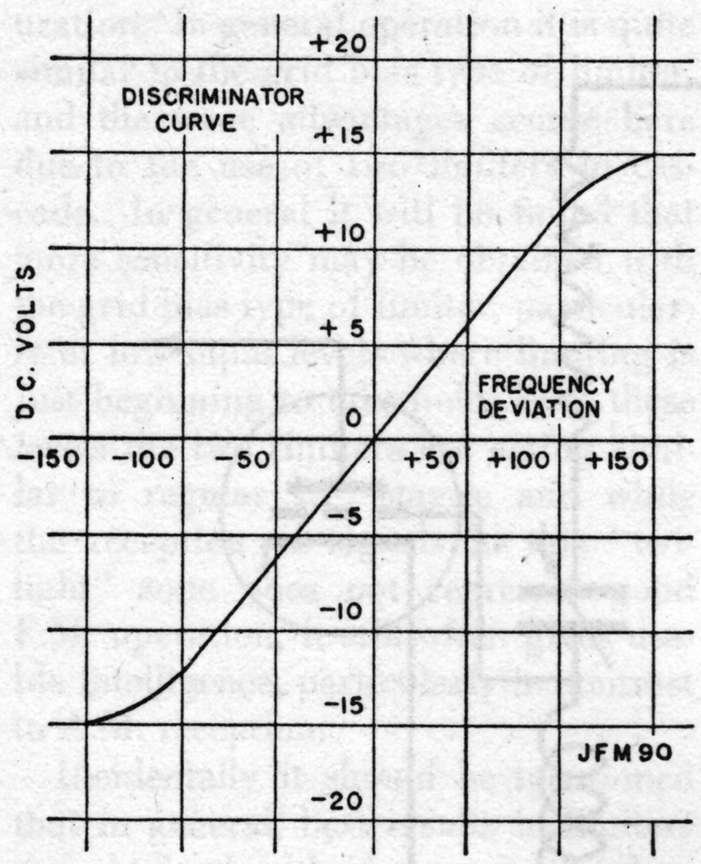

Fig. 17

Most of the discriminators used today are of the type described above. In the General Electric Model LF-115, shown in Fig. 19, a modification of this circuit is employed which permits the use of a grounded single cathode in the associated dual diode. In this arrangement the secondary is opened at the center, one side going to ground, the other being effectively bypassed to ground by a capacitor. The two diode loads are connected between this point and ground, and thus are less "hot" than in the usual arrangement. By tracing the circuit out it will be seen that it is essentially the same fundamentally, with the primary being in series with one half of the secondary to each diode.

Fig. 17 shows the discriminator characteristic of a typical modern receiver. It will be noted that this curve is linear over a plus or minus 100-kc. region, thus adequately caring for the maximum permissible swing, together with a reasonable safety factor for detuning and drift.

Audio Amplifiers

The audio systems of modern F.M. receivers differ from corresponding A.M. practice primarily in the provision for better high frequency response on F.M., where the full audio range up to 15,000 cycles may be utilized. This usually takes the form of better audio amplifiers, more power output, considerably better acoustic systems, including many cabinet refinements designed to improve the overall response. Also, in F.M. the high frequencies are pre-emphasized at the transmitter in order to improve the signal-to-noise ratio, consequently the receivers are equipped with de-emphasis networks when in the F.M. position, to restore the fidelity to normal. Some of the current receivers employ audio degeneration to further smooth out the overall response curve and reduce harmonics.

Alignment

The alignment of frequency modulated receivers includes several operations similar to those employed in regular A.M. practice, and several peculiar to F.M. In conventional A.M. alignment the simplest method involves the use of a signal generator, which is a source of amplitude modulated waves, and which may be anything from an elaborate piece of equipment, complete with accurate controls of output, modulation, etc., to a simple modulated oscillator. Output is usually indicated by a simple output meter, although the more elaborate service installations also have cathode ray oscilloscopes for I.F. alignment. These oscilloscopes are extremely valuable in A.M. alignment, but by no means indispensable. In F.M. alignment a cathode ray oscilloscope is an even more valuable tool, as it makes the visual effect of the I.F. and discriminator transformer tuning adjustments very noticeable. The signal generator employed for F.M. alignment differs from that used on A.M. in that it must supply a more widely differing range of frequencies than usually employed on A.M., namely, I.F. frequencies varying from about 2 mc. up to 8 mc., or even higher, plus the signal frequencies of 42-50 megacycles. Also these signals must be frequency modulated. A conventional A.M. signal generator or test oscillator that covers the required range of frequencies may be

used in aligning F.M. receivers by using an unmodulated signal and a meter to indicate resonance, as will be described later. There are not very many F.M. generators on the market yet—Boonton Radio Corporation makes a very good F.M. signal generator, their model 150A. In addition Hickok has a model 188X generator, and General Electric their type TMV-97-C Test Oscillator and TMV-128A Frequency Modulator. Any good oscilloscope may be used in conjunction with these generators to give visual indication of alignment.

To illustrate the usual alignment process for an F.M. receiver, let us consider G.E. model LF-115 receiver. On the schematic, Fig. 19, will be noted two points, "A" where the audio output from the discriminator is connected

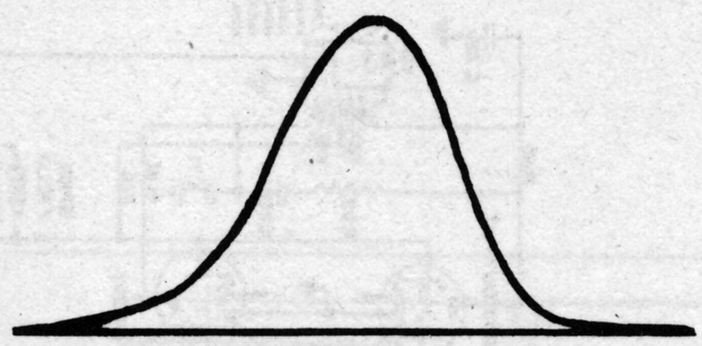

Fig. 22

to the volume control, and "B," on the grid of the first limiter. These two points are the usual alignment points for connecting meters or oscilloscope in practically all F.M. sets. Point A is used for discriminator alignment, B for I.F. and R.F. alignment.

In aligning this set with one of the above-mentioned signal generators the oscilloscope is connected first to point B through a half-megohm resistor. With the signal generator set to the I.F. frequency, 4.3 mc. in this particular set, and applied to the grid of the 6SG7 converter tube through a small mica condenser, the oscilloscope should show a curve like that of Fig. 22, when the circuits are properly aligned. In aligning such a set it is customary to align the last I.F. trimmers first, and then proceed forward.

After the I.F. has been properly aligned the oscilloscope is shifted to point A, still through the resistor, and a curve as in Fig. 23 will be obtained when properly aligned. The effect of the secondary trimmer of the discriminator transformer is to shift the cross-over point of the two straight lines up and down, while the adjustment of the primary trimmer affects the straightness of these lines. The proper adjust-

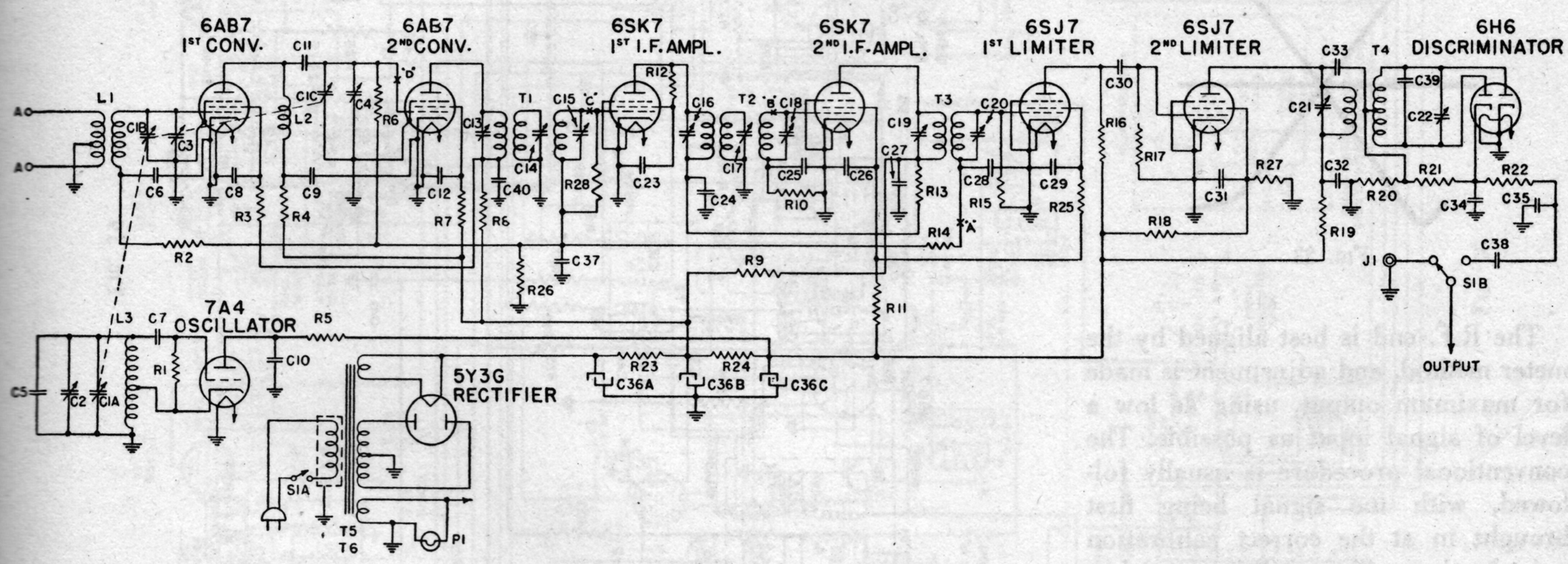

PARTS DESCRIPTION LIST—MODEL JFM-90

Symbol	Description	Symbol	Description	Symbol	Description
C1a	Oscillator section of tuning condenser	C33	50 mmf. temperature compensating capacitor	R11	15,000 ohms carbon resistor
C1b	1st converter section of tuning condenser	C34	47 mmf. mica capacitor	R12	47,000 ohms carbon resistor
C1c	2nd converter section of tuning condenser	C35	220 mmf. mica capacitor	R13	2200 ohms carbon resistor
C2	5-24 mmf. oscillator air trimmer	C36a	15 mfd. dry electrolytic	R14	2.2 megohms carbon resistor
C3	2-20 mmf. 1st converter trimmer	C36b	30 mfd. dry electrolytic	R15	47,000 ohms carbon resistor
C4	2-20 mmf. 2nd converter trimmer	C36c	10 mfd. dry electrolytic	R16	10,000 ohms carbon resistor
C5	40 mmf. temperature compensating capacitor	C37	0.1 mfd. paper capacitor	R17	180,000 ohms carbon resistor
C6	470 mmf. mica capacitor	C38	.02 mfd. paper capacitor	R18	68,000 ohms carbon resistor
C7	50 mmf. temperature compensating capacitor	C39	8 mmf. temperature compensating capacitor	R19	22,000 ohms carbon resistor
C8	470 mmf. mica capacitor	C40	.01 mfd. paper capacitor	R20	100,000 ohms carbon resistor
C9	470 mmf. mica capacitor	L1	Antenna coil	R21	100,000 ohms carbon resistor
C10	470 mmf. mica capacitor	L2	Interconverter coil	R22	100,000 ohms carbon resistor
C11	470 mmf. mica capacitor	L3	Oscillator coil	R23	1200 ohms 7.4 W. wire wound resistor
C12	.01 mfd. paper capacitor	P1	Dial lamp, Mazda No. 44	R24	3300 ohms 1 W. carbon resistor
C23	.01 mfd. paper capacitor	R1	33,000 ohms carbon resistor	R25	47,000 ohms carbon resistor
C24	.01 mfd. paper capacitor	R2	3.3 megohms carbon resistor	R26	470,000 ohms carbon resistor
C25	47 mmf. mica capacitor	R3	6800 ohms carbon resistor	R27	47,000 ohms carbon resistor
C26	.01 mfd. paper capacitor	R4	2200 ohms carbon resistor	R28	47,000 ohms carbon resistor
C27	.01 mfd. paper capacitor	R5	1000 ohms carbon resistor	S1a	Power switch
C28	47 mmf. mica capacitor	R6	3.3 megohms carbon resistor	S1b	F.M.-Phono switch
C29	47 mmf. mica capacitor	R7	12,000 ohms carbon resistor	T1	1st I.F. transformer
C30	22 mmf. mica capacitor	R8	1000 ohms carbon resistor	T2	2nd I.F. transformer
C31	47 mmf. mica capacitor	R9	1000 ohms carbon resistor	T3	3rd I.F. transformer
C32	47 mmf. mica capacitor	R10	47,000 ohms carbon resistor	T4	Discriminator I.F. transformer
				T5	Power transformer for 50-60 cycles
				T6	Power transformer for 25 cycles

Fig. 18—*Schematic Diagram Model JFM-90*

ment is obtained when the two lines are straight and cross in the middle.

When an oscilloscope is not available, a high resistance voltmeter may be used, preferably one with at least 20,000 ohms per volt. This meter is first connected to point B through the half-megohm resistor, and the signal generator is now unmodulated. All the trimmers are adjusted for maximum voltage as indicated by this meter. The meter and resistor are now shifted to A, and with the secondary purposely detuned, the primary is tuned for maximum voltage. Then the secondary is tuned until this voltage drops to zero. This adjustment is fairly critical, and the voltage changes polarity as it is passed through.

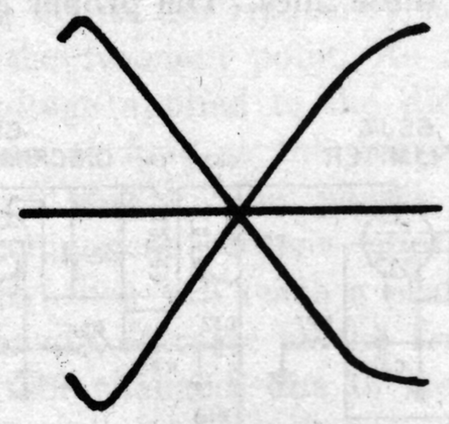

FIG. 23

The R.F. end is best aligned by the meter method, and adjustment is made for maximum output, using as low a level of signal input as possible. The conventional procedure is usually followed, with the signal being first brought in at the correct calibration point by the oscillator adjustment, then the antenna and R.F. trimmers are adjusted for maximum output voltage at point B.

When an F.M. receiver has a built-in dipole, it is best to couple the signal generator to it by capacitive pick-up, using a radiating rod or loop on the generator. Where external antenna is required the usual dummy antenna may be about 50 ohms.

Schematics of several samples of current production are shown in Figs. 18 to 21, inclusive. Fig. 18 shows the G.E. model JFM-90 translator, intended to be used with any regular A.M. audio system, Fig. 19 illustrates G.E. model LF-115 and associated models, Fig. 20 illustrates Stromberg-Carlson models 925 and 1025, and Fig. 21 shows Zenith 14B1 chassis.

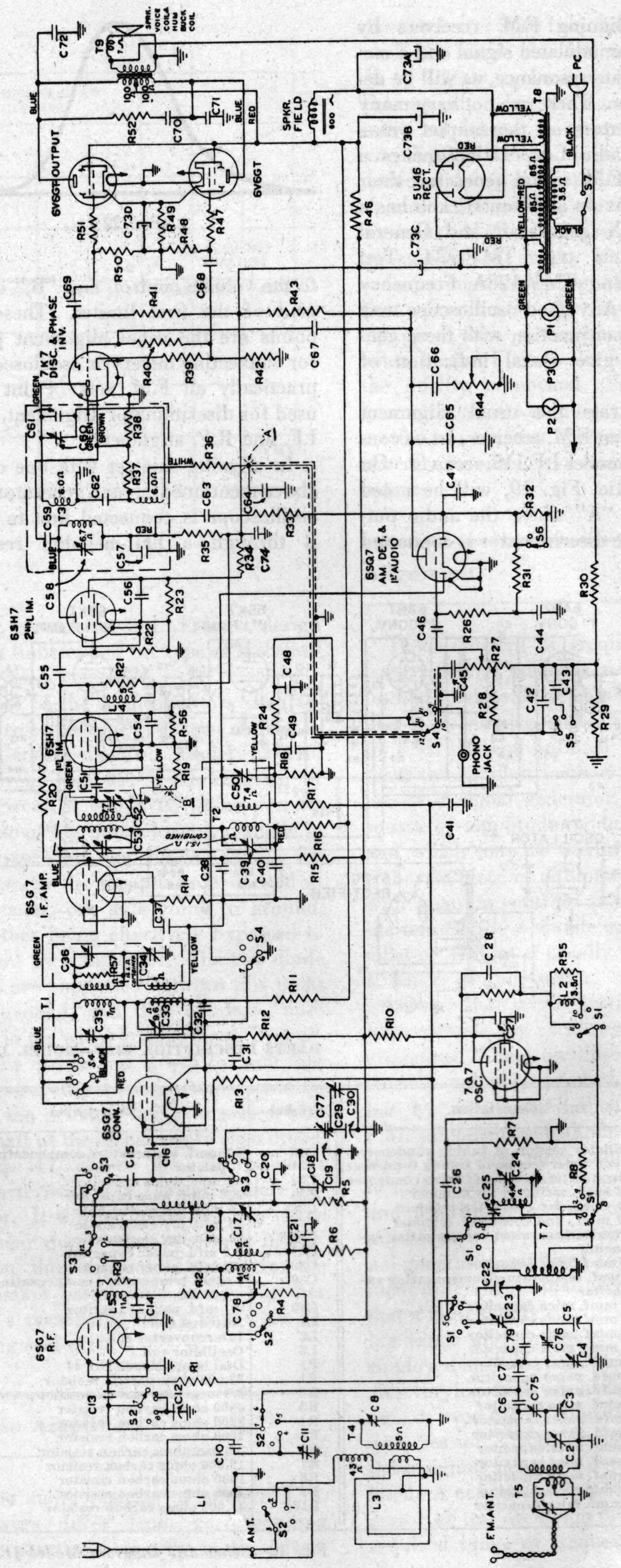

FIG. 19

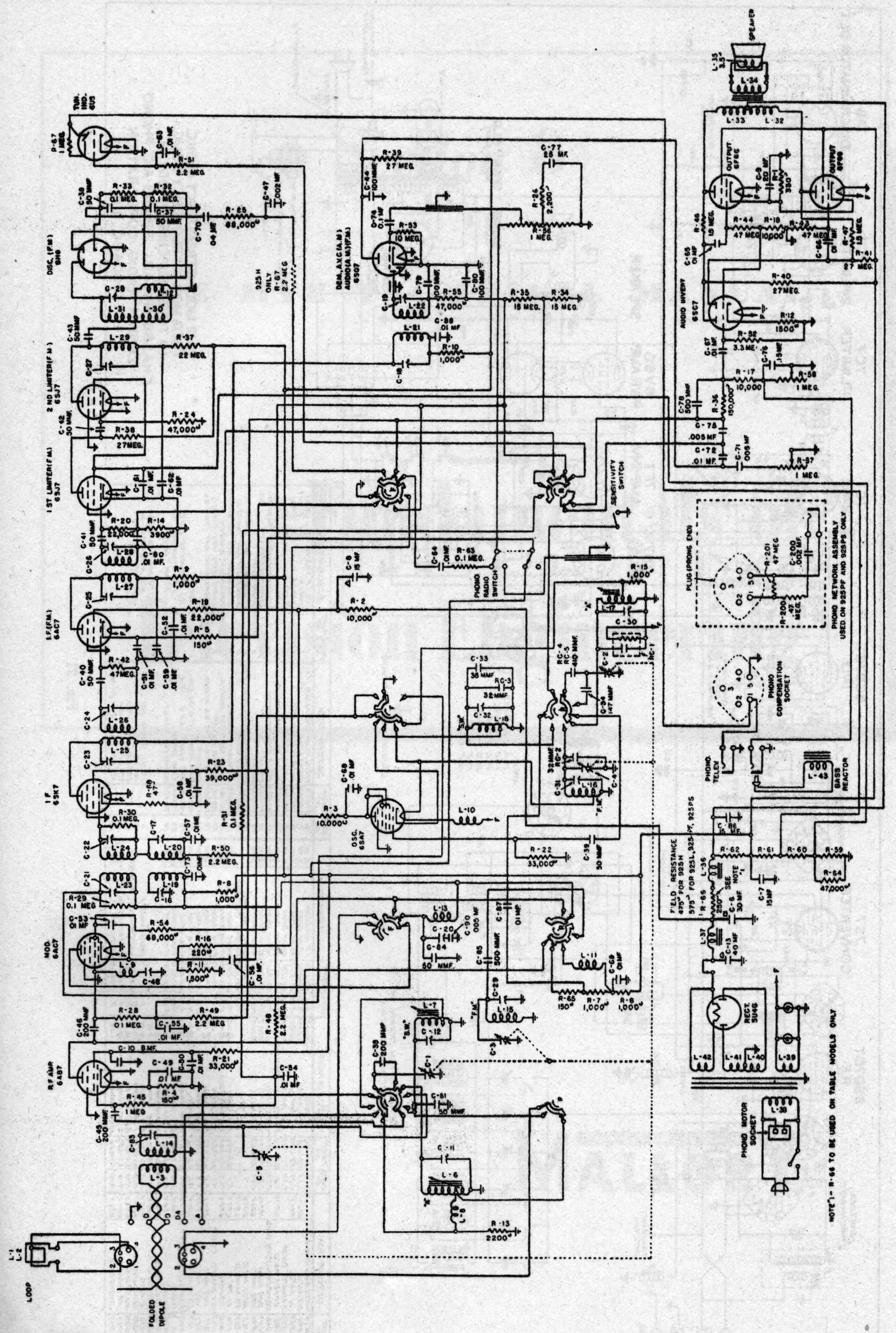
TUN. IND. 6U5
DISC. (F.M.) 6H6
2 ND LIMITER (F.M.) 6SJ7
1 ST LIMITER (F.M.) 6SJ7
I.F. (F.M.) 6AC7
I F 6SK7
MOD. 6AC7
R.F. AMP 6AB7
LOOP
FOLDED DIPOLE
DEM., A.V.C. (A.M.) AUDIO (A.M.) (F.M.) 6SQ7
OSC. 6SA7
SENSITIVITY SWITCH
PHONO. RADIO SWITCH
PLUG (PRONG END)
PHONO NETWORK ASSEMBLY USED ON 925PF AND 925PS ONLY
PHONO COMPENSATION SOCKET
PHONO. TELEV.
BASS REACTOR
FIELD RESISTANCE 475Ω FOR 925H 975Ω FOR 925L, 925PF, 925PS
SEE NOTE 1
AUDIO INVERT 6SC7
OUTPUT 6F6G
OUTPUT 6F6G
SPEAKER
RECT. 5U4G
PHONO MOTOR SOCKET
NOTE 1 - R-66 TO BE USED ON TABLE MODELS ONLY

FIG. 20

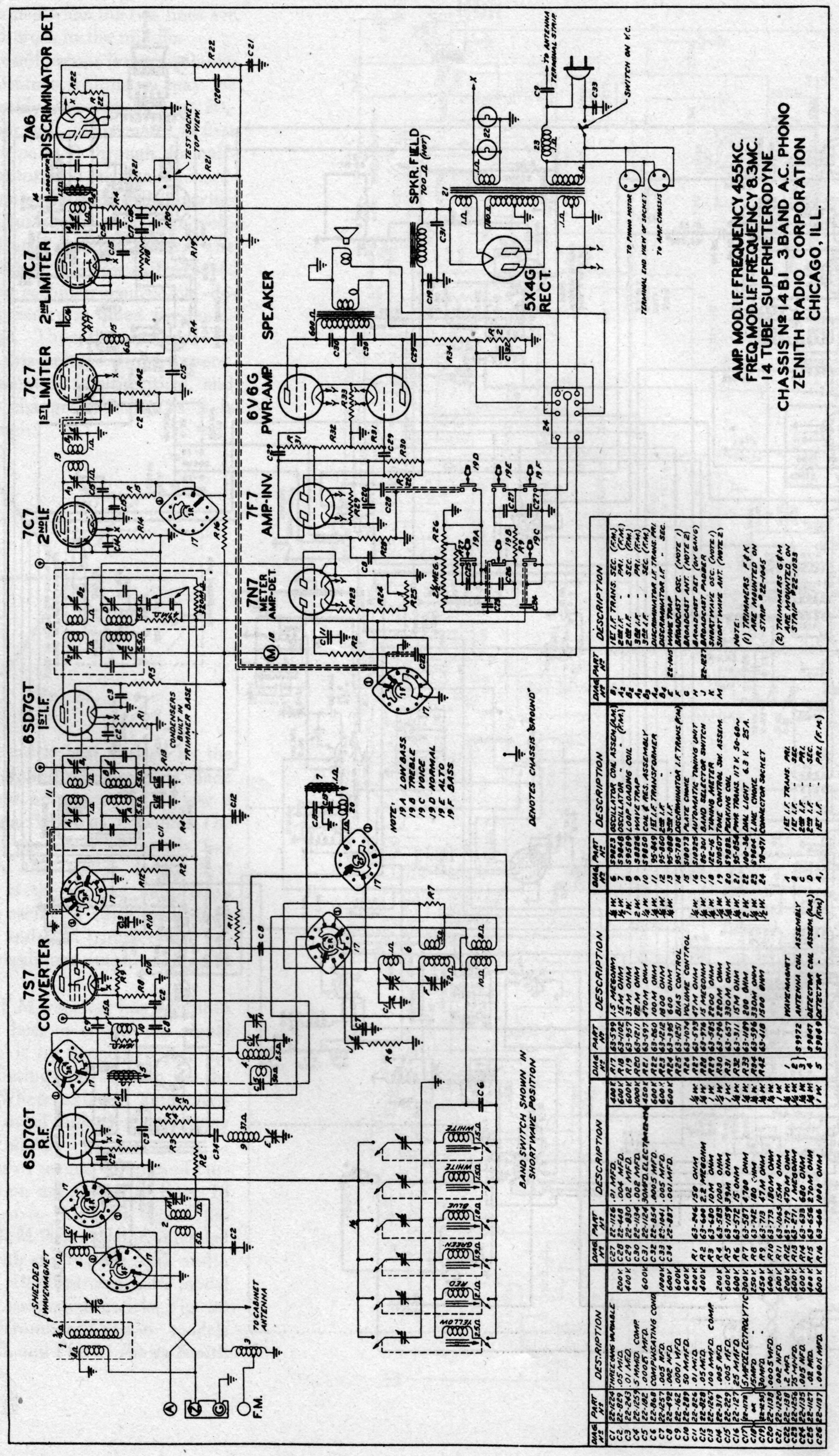

DIAG. №	PART №	DESCRIPTION		DIAG. №	PART №	DESCRIPTION		DIAG. №	PART №	DESCRIPTION		DIAG. №	PART №	DESCRIPTION
C1	22-1224	THREE GANG VARIABLE	200 V.	C27	22-1126	.01 MFD.	400 V.	R17	63-599	1.5 MEGOHM	1/2 W.	6	S9823	OSCILLATOR COIL ASSEM. (A.M.)
C2	22-829	.05 MFD.	400 V.	C28	22-448	.004 MFD.	600 V.	R18	63-1102	15 M OHM	1/2 W.	7	S9848	OSCILLATOR " " (F.M.)
C3	22-243	.01 MFD.		C29	22-830	.02 MFD.	600 V.	R19	63-957	33 M OHM	1/2 W.	8	S9589	LOOP LOADING COIL
C4	22-1259	5 MMFD. COMP.		C30	22-1134	.002 MFD.	1000 V.	R20	63-1211	82 M OHM	2 W.	9	S8826	WAVE TRAP
C5	22-182	.0002 MFD.	600 V.	C31	22-1124	30 MFD. ELECTROLYTIC	450 V.	R21	63-597	470 M OHM	1/2 W.	10	S9850	COIL & RES. ASSEMBLY
C6	22-868	COMPENSATING COND.		C32	22-854	.0005 MFD.	600 V.	R22	63-860	100 M OHM	1/2 W.	11	95-849	1ST I.F. TRANSFORMER
C7	22-1257	.005 MFD.	1000 V.	C33	22-1041	.005 MFD.	600 V.	R23	63-1212	1800 OHM	1/2 W.	12	95-860	2ND I.F. "
C8	22-492	.002 MFD.	600 V.	C34	22-887	.001 MFD.	600 V.	R24	63-395	600 OHM	1/2 W.	13	95-880	3RD I.F. "
C9	22-162	.0001 MFD.	600 V.					R25	63-1251	BIAS CONTROL		14	95-788	DISCRIMINATOR I.F. TRANS. (F.M.)
C10	22-289	50 MMFD.	600 V.					R26	63-1074	VOLUME CONTROL		15	S10073	PLATE CHOKE
C11	22-826	.01 MFD.	200 V.	R1	63-846	150 OHM	1/2 W.	R27	63-593	47 M OHM	1/2 W.	16	S10325	AUTOMATIC TUNING UNIT
C12	22-828	.05 MFD.	400 V.	R2	63-600	2.2 MEGOHM	1/2 W.	R28	63-976	15 MEGOHM	1 W.	17	85-301	BAND SELECTOR SWITCH
C13	22-1267	100 MMFD. COMP.		R3	63-680	10 M OHM	1/2 W.	R29	63-585	2200 OHM	1/2 W.	18	122-16	TUNING METER
C14	22-319	.005 MFD.	200 V.	R4	63-585	1000 OHM	1/2 W.	R30	63-296	220 M OHM	1/2 W.	19	S10507	TONE CONTROL SW. ASSEM.
C15	22-229	.005 MFD.	600 V.	R5	63-1159	39 M OHM	1/2 W.	R31	63-657	330 M OHM	1/2 W.	20	S9882	PEAKING COIL
C16	22-127	25 MMFD.	600 V.	R6	63-572	15 OHM	1/2 W.	R32	63-311	15 M OHM	1/2 W.	21	95-854	PWR. TRANS. 117 V. 50-60~
C17	22-178	5 MFD. ELECTROLYTIC	300 V.	R7	63-587	4700 OHM	1/2 W.	R33	63-1109	200 OHM	2 W.	22	100-36	DIAL LIGHT 6.3 V. 2.5 A.
C18	22-250	5 MFD. "	250 V.	R8	63-742	180 OHM	1/2 W.	R34	63-596	330 M OHM	1/2 W.	23	S9804	LINE CHOKE
C19	22-250	30 MFD. "	450 V.	R9	63-713	47 M OHM	1/2 W.	R42	63-418	1500 OHM	1/2 W.	24	78-471	CONNECTOR SOCKET
C20	22-1138	.0005 MFD.	600 V.	R10	63-773	180 M OHM	1/2 W.							
C21	22-1220	.002 MFD.	600 V.	R11	63-1065	15 M OHM	1 W.							
C22	22-138	.2 MFD.	200 V.	R12	63-719	470 M OHM	1/2 W.	1		WAVEMAGNET		A		1ST I.F. TRANS. PRI.
C23	22-1256	75 MMFD.	600 V.	R13	63-271	1 MEGOHM	1/2 W.	2	S9972	ANTENNA COIL ASSEM. (A.M.)		A		1ST I.F. " SEC.
C24	22-135	.005 MFD.	600 V.	R14	63-633	680 OHM	1/2 W.	3	S9847	DETECTOR COIL ASSEM. (A.M.)		C		2ND I.F. " PRI.
C25	22-1127	.02 MFD.	400 V.	R15	63-656	270 M OHM	1/2 W.	4	S9849	DETECTOR " " (F.M.)		D		2ND I.F. " SEC.
C26	22-137	.0001 MFD.	600 V.	R16	63-606	1000 OHM	1 W.	5				A,		3RD I.F. " PRI. (F.M.)

NOTE:
(1) TRIMMERS F & K ARE MOUNTED ON STRIP № 22-1045
(2) TRIMMERS G & M ARE MOUNTED ON STRIP № 22-1033

FIG. 21

• *Section* 8

THE MYE TECHNICAL MANUAL

Fundamentals of Television Engineering

P.R. MALLORY & CO. Inc.
MALLORY

Editor's Note

Commercial television, whose prospects were so brilliant a year or so ago, has been temporarily stalemated by the present emergency. While there is no doubt that advancements comparable to the rapid strides previously made in the technique of visual transmission and reception are still being made every day, these developments have been limited, rightly, to the armed services.

To those interested in this field, we scarcely need to point out that communications, warning services, etc. of the Army and Navy have placed great emphasis on high frequency operation. Both Army and Navy are training large forces for the design, operation, and maintenance of high frequency equipment. With the end of the war the return of this personnel to civilian life will provide an adequate supply for the rapid expansion of all the broadcast services employing high frequency operation. We believe it possible to predict without undue risk that television will have the nationwide adoption it deserves, as soon as peacetime and a normal material supply make such an undertaking practicable.

The following article by Mr. Everest gives an excellent portrayal of the fundamentals of commercial television. The wartime interim from the publication of this text until the readvent of commercial services, may produce changes or improvements in systems, but the basic theory of this article provides a sound groundwork for the future.

THE FUNDAMENTALS OF TELEVISION ENGINEERING

Reprinted from the Television Engineering Section, COMMUNICATIONS

Part I: *The Essential Elements of a Television System*

By

F. ALTON EVEREST

Assistant Professor of Electrical Engineering, Oregon State College

THOSE in the communication field today are witnesses to the addition of a new phase to this already manifold field, namely, instantaneous sight at a distance. Communication over great distances has been developed through the perfection of the arbitrary signal-symbol stage, through sound broadcasting, and now the addition of sight to sound promises to open up a multitude of new opportunities for exploitation and development. It should be pointed out here that to the careful student of these matters, there appears to be no factual basis for expecting the combined sight and sound type of broadcast to supplant the common aural broadcast as an entertainment and educational medium for many years to come. Even though the present-day television equipment is in an apparently advanced stage as compared to the broadcast equipment at the inception of that service, there are many problems, both technical and commercial which seem almost insurmountable at this time. Based upon past attainments in technological fields, however, there is no reason to doubt the ultimate solution of these difficulties.

In the translation of a picture from light values to electrical currents, some manner of photo-electric device is needed. The accidental discovery of the photo-conductive properties of selenium by May in 1873 appears to be one of the important stimuli to the development of means to transmit sight. At about the turn of the century, results from Hertz's discovery in 1887 of the photo-emission phenomenon began to appear. This finally bore fruit in the photo-electric cell which was so prominent in the early development of television and which has such widespread application in other fields today.

There is something else essentially necessary, however, beside the translation of light to electric current. For instance, if a photo-sensitive device were held up before an image to be transmitted, it is obvious that the transmission of the image as such would be unsuccessful. A signal would be transmitted which would be proportional to the *average* illumination of the subject only. A comparable occurrence in photography would be snapping a picture with the lens removed from the camera. True, the film would be exposed, but absolutely no information would be revealed because the film would be uniformly exposed over all of its surface to a degree depending upon the illumination of the subject and the length of exposure.

From this fact that any photo-electric element delivers an electric current proportional to the *average* illumination falling upon it, it is evident that to convey visual information it is necessary that the photo-electric device does not look at the whole subject to be transmitted, but rather at one *elemental area* of it at a time. In this way, the signal corresponding to the average light intensity of each elemental area can be transmitted. The problem then resolves itself into a problem of analyzing the picture into many of these elemental areas, allowing the photo-electric device to look at each area in turn transmitting a signal corresponding to the average light intensity of each small area, converting this signal back to light of the correct intensity at the receiver, and the re-assembling of the picture. While this method is rather complex and unwieldy, at the present stage of the art it is the only practical one available. If, as in the eye, the image would be thrown upon a mosaic of photo-electric elements each of which was connected to a similarly located reproducing element on the receiving screen, we would have a simple system in its action but quite impractical. One reason for this impracticability can be seen in the fact that the eye has about

A 441-line television image of L. E. Gubb, President, Philco Radio & Television Corp. Picture transmitted over portable system using RMA standards.

441-line television picture transmitted by Philco system using RMA standards. Jean Muir, Warner Bros. Star.

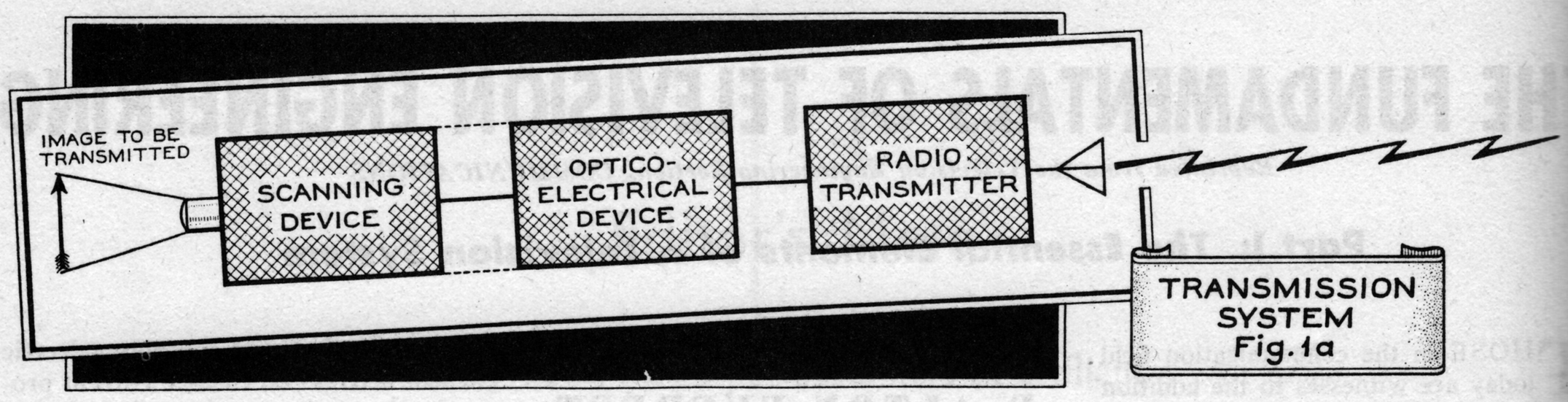

Fig. 1a

five million of these discrete elements (the so-called rods and cones) and a separate connection between each and the receiver (the brain). The interconnection of just a few conductors between the television transmitter and each receiver would be hardly feasible, to say nothing of five million of them.

The image, then, must be broken down into many tiny elemental areas, each of which will be transmitted independently. There have been innumerable systems of scanning proposed such as, for instance, spiral scanning, radial scanning, and sine-wave scanning. Most of these suffer from the effects of a change in scanning rate on different parts of the image or some form of non-uniform resolution of detail over the image surface. The method which has withstood the test of years of experimentation is a simulation of the form disc patented by Nipkow in Germany in 1884. By means of a relatively large disc with a spiral of small holes arranged near its periphery, the image was scanned along a narrow line by one hole and along another line just below or above the first line by the next hole in the spiral and so on across the image in a regular sequence.

Showing scanning strip and signals.

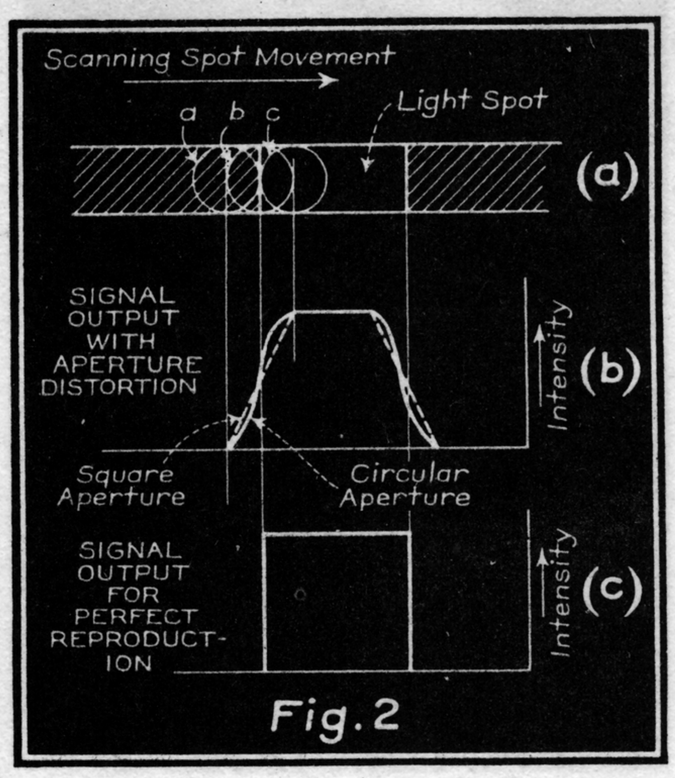

Fig. 2

A simple analogy of the form of scanning usually used today is that of reading a page of a book. The eye starts in the upper left-hand corner of the page and progresses at a uniform rate along the first line. At the end of the line, the eye snaps back to the beginning of the second line at a much faster rate and then along the second line at the original uniform rate. This continues to the bottom of the page and then is repeated in an identical manner on following pages. This could be classed as "uniform speed sequential scanning." If the book were especially prepared in

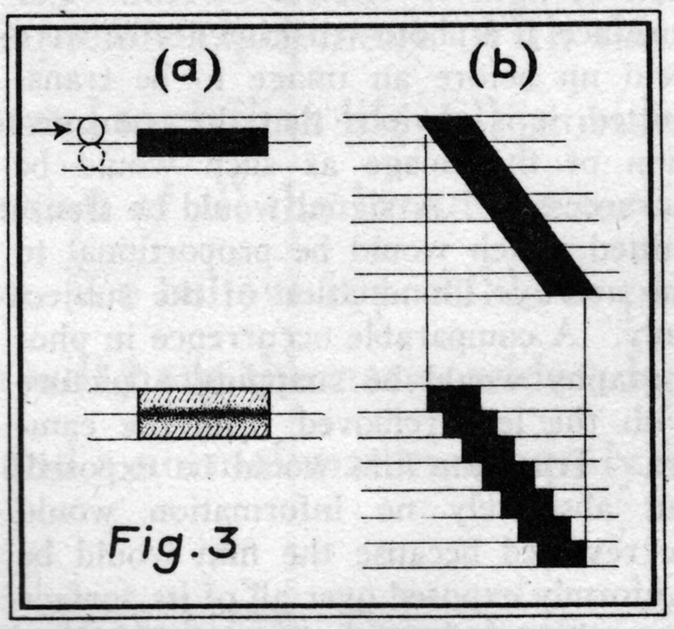

Fig. 3

Distortions. Scanning spot width comparable to scanned detail.

such a code that the story was continuous by reading the odd lines first and then going over it again on the even lines, the same information could be imparted with only a little additional trouble, and it could be classed as an "interlaced scanning" process. In either case, the image is scanned in a definite, pre-arranged order, and the size of each elemental area would be determined mainly by the width of each strip. The greater the number of strips per picture, the smaller each elemental area and the smaller the picture detail that can be resolved. We shall discuss these essential qualities of a television image in more detail later.

ANALYSIS OF TELEVISION SYSTEMS

All television systems can be broken down into a very few essential functions as shown in block diagram form in Fig. 1. Here we are dealing with the sight transmission and receiving system alone, because broadcasting the sound accompanying the image has already reached a high state of perfection and its working is more or less common knowledge. The scanning device by which the image is to be torn into the elemental areas can take any number of different forms. Representative of the mechanical methods are: (1) *Apertured disc, single or multiple spiral;* (2) *apertured drum;* (3) *apertured endless band;* (4) *mirror drum;* (5) *vibrating mirrors;* (6) *prismatic disc;* (7) *mirror screw.*

The optico-electrical device could be the ordinary photo-electric cell arranged singly or in banks, possibly even equipped with electron-multipliers to increase the sensitivity. The radio transmitter section will not be discussed, because no new theories or modes of operation are introduced for television work. The suitable transmission of the wide frequency bands required, however, and the transmission at the ultra-high frequencies introduce many new problems, but they have all been met by extensions of fundamental electrical theory.

It will be noticed that the scanning device and the optico-electrical device are also connected with broken lines which indicate that these two functions can take place within one instrument. In this series, which will deal mainly with electronic methods, this is particularly the case. For instance, the Image Dissector and the Iconoscope which will be taken up in great detail later, utilize electronic methods of scanning in such a way that the photo-electric emission and the scanning take place within the same evacuated glass envelope. Basically, however, these highly developed devices take their place in the block diagram of Fig. 1 along

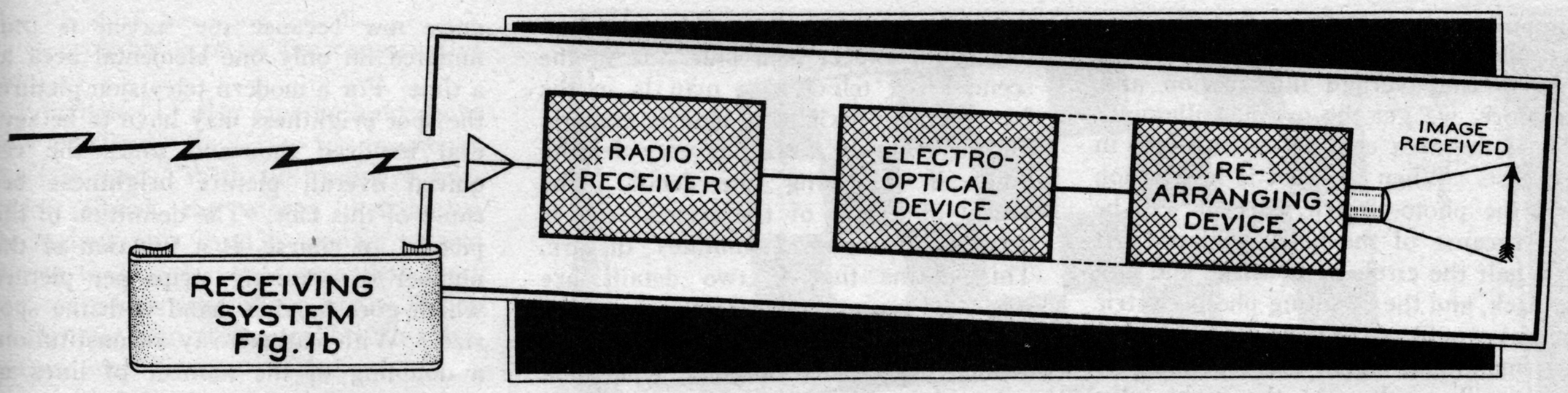

with the humble scanning disc and photo-electric cell. For these two devices, we must add electrostatic and electromagnetic deflection of electron beams as two other systems of scanning to follow the list given above.

At the receiver the signals are demodulated and amplified by the customary methods (except for extension of the pass bands) and the varying voltage is used to actuate the electro-optical device. In the mechanical systems this device may take one of the following forms: (1) *flat plate neon lamp;* (2) *Kerr cell;* (3) *supersonic light valve.* The re-arranging device on the receiving end of mechanical systems can be any one of the devices listed as scanning devices at the transmitter. For electronic television, in which we are particularly interested, the electro-optical device and the re-arranging device are found in the same instrument as at the transmitting end. The cathode-ray tube ordinarily used contains an electro-optical device in the variation of fluorescent screen excitation and the resulting emission of light by the variation of the electron density of the beam. Here again the re-arranging system may be electrostatic or the electromagnetic deflection of this electron beam. This, too, is a special study and will be dealt with in detail later.

REPETITION RATE

As far as the units in the block diagram of Fig. 1 are concerned, there is no difference between facsimile and television transmission. Both demand a tearing down of the image to be transmitted into strips and the optico-electrical analysis of the light and shade intensities along that strip at the transmitting end, and the reconstitution of the image at the receiver by the translation of the electrical signals back to their corresponding light intensities, and the arrangement of these picture elements into their proper order. However, the speed with which the process takes place and whether or not a record is to be made of the received image determines whether we shall call ours a television or a facsimile system. A typical facsimile system might logically require fifteen minutes to transmit a photograph eight by ten inches. At the receiver, at the end of this time, a permanent record of the image will have been produced. For television, a complete picture of the subject would be transmitted and completely reproduced in, possibly, 1/30 second. Each picture will differ slightly from the preceding one due to any motion that has taken

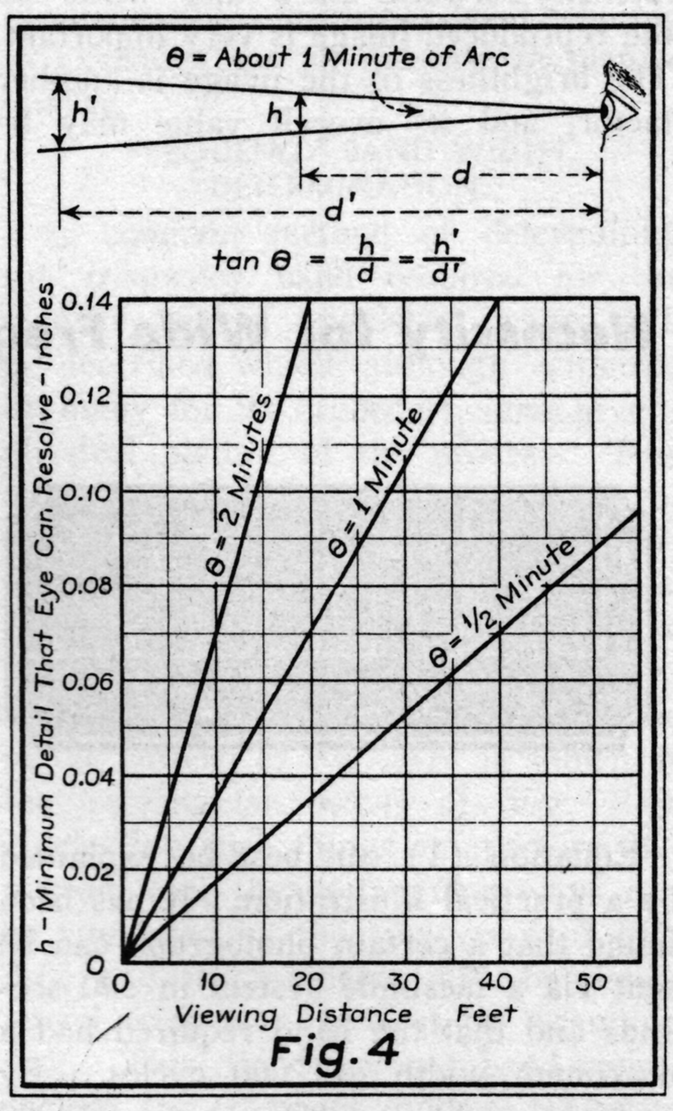

Fig. 4

place in that time. Because of a characteristic of the eye which is called "persistence of vision," it will not be able to distinguish between the separate pictures, but will see what appears a continuous, uninterrupted flow of motion of the subject. Once the retina of the eye is stimulated with a single picture focused upon it, the impression remains for about 1/10th second after the stimulus has been removed. By impressing about fifteen separate pictures per second upon the retina, the eye will be unable to follow the dark spaces between pictures. However, at repetition rates as low as fifteen per second, the flicker may be objectionable, and it is standard motion picture practice to project twenty-four "frames" per second. Interlaced scanning giving thirty complete pictures per second, but scanned in such a way that each picture is traversed twice with scanning lines which do not coincide, actually shows sixty pictures per second, and hence the flicker effect is practically eliminated.

APERTURE DISTORTION

The number of lines with which a subject is scanned determines the fineness of the detail which can be resolved. It is obvious that we cannot expect to reproduce clearly details that have dimensions comparable to the scanning spot, or in other words the width of the scanning strip. An effect which is important in this regard is a distortion due to the finite size of the "aperture" or scanning spot which is called "aperture distortion." Fig. 2-a shows in greatly magnified form a scanning strip having a light detail on it which changes abruptly from dark to light at its edges. As we have seen, the reason we are

Left: Showing minimum detail eye can resolve.

- Bibliography -

1. Gray, Horton and Mathes, "THE PRODUCTION AND UTILIZATION OF TELEVISION SIGNALS", Bell System Technical Journal, Volume VI, Number 4, October, 1927.

2. Engstrom, "A STUDY OF TELEVISION IMAGE CHARACTERISTICS", Proc. I.R.E: Part I, Volume 21, Number 12, Dec. 1933 Part II, Volume 23, Number 4, Apr. 1935

scanning the picture at all is because our photo-electric devices can respond only to the average illumination and, therefore, we get the average illumination of the area covered by the spot in this case. When the spot is in position (a), the photo-electric current will be zero because of the black surface. At (b), half the circle is on white and half on black, and the resulting photo-electric current would correspond to gray. At (c), maximum signal corresponding to white will result. At the right edge of the white detail, similar signals would be produced in reverse. While the signal for ideal reproduction is that shown in Fig. 2-c, the actual signal resulting is shown in Fig. 2-b both for circular and square scanning spot. Therefore, when the scanning strip width is comparable in size to the detail being scanned, we must expect distortions such as shown in Fig. 3. In (a) is shown the case of a horizontal detail unfortunate enough to lie between two strips, and in (b) is shown the stair-step effect produced in diagonal elements.

It is evident from this that in order to analyze the details of, say, the face of a subject, there must be a relatively great number of lines scanning it. If the eyes of the subject are about the same width as the scanning strip, all one could expect is a blur. If in the scene being televised a man is in the far distance, perhaps a blur is enough, for the observer's eye has very definite limits in analyzing fine detail. The acuity of vision of the normal eye is between 0.5 and 2 minutes of arc. This means that if two details are separated by an angle greater than this, the eye can distinguish them as separate details, but if their angular separation is less than this amount, the two details will merge into a blur. This results from the fact that the rods and cones on the retina of the eye are spaced a finite distance apart, and each is capable of responding only to the average illumination falling upon it. Fig. 4 shows the relation of the minimum size of the detail that the eye can appreciate in relation to the viewing distance.

SUMMARY OF PICTURE QUALITIES

The excellence of the television image is a function of many things, all intimately connected together. The contrast range, or the relative difference in intensity between "black" and "white" on the reproduced image is very important. The brightness of the image is another factor, and its overall value may be quite low because the screen is illuminated on only one elemental area at a time. For a modern television picture, the spot brightness may have to be several hundred thousand times the required overall picture brightness because of this fact. The definition of the picture, of course, is a function of the number of scanning strips per picture which goes hand in hand with the spot size. With cathode-ray reconstitution, a doubling of the number of lines in a picture will increase the definition and require a spot size of half the former value. As the light flux is proportional to the square of the spot diameter, the received picture brightness will be reduced to about one-fourth its original value.

Picture size, the number of strips per picture, and the viewing distance are also closely tied together. For a given picture size and number of lines, there is a proper viewing distance at which the acuity of the eye as expressed in Fig. 4 and the smallest detail that can be resolved in the picture are at such a balance that the eye does not notice deficiencies in the picture. At a closer viewing distance, the picture will appear coarse, and at greater distances some of the definition will be going to waste.

Part II: *The Necessity for Wide Frequency Bands*

TRANSMISSION OF INFORMATION

IT is a well-known fact that the frequency band available and the time available for the transmission are two very important factors which govern the amount of *information* that can be transmitted[1]. This holds true in a general way for all types of signals such as telegraphic, voice, music, facsimile, or television and for all media of transmission, such as air for sound waves, wires, or the medium in which radio waves are propagated. The amount of information that can be transmitted can be arbitrarily specified in a rather vague term which we will call "information units." The frequency band available extends from some lower frequency, f_1, to some higher frequency, f_2, and covers a frequency range of $(f_2 - f_1)$ cycles. The time t available for the transmission let us express in seconds. These factors can be expressed as

$$\text{Information units} = (f_2 - f_1)\,t \quad \ldots (1)$$

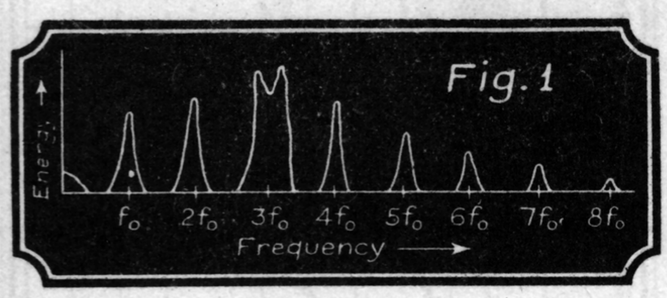

Equation (1) can best be explained by a practical illustration. It has been found that a certain photograph can be sent via a facsimile system in 300 seconds and that the band required had a maximum width of 2000 cycles. By multiplying 300 by 2000, we get 600,000 information units contained in this picture of practically perfect quality. To obtain the same quality with a television image containing 600,000 information units in a time of 1/30 second to come within the eye retentive period for avoiding flicker would require a wider frequency band. The width of this band would be found by dividing the number of information units by the time available, or 1/30 second. This gives a frequency band width of 18,000,000 cycles necessary to transmit this nearly perfect picture in 1/30 second. Actually, however, it has been shown that an information content of about 1/6 of this, or 100,000 information units is ample for television. This brings the necessary frequency range down to a much lower value.

Often it is found that the transmission of a certain amount of information takes up a much wider frequency range than indicated by equation (1). It must be pointed out that equation (1) is only a qualitative statement. One of the reasons for this lies in the fact that "information" is such an intangible quantity. It is evident that more actual information exists in a television image than in the click of a telegraph sounder, but how much more? How can one measure it? A Chinese proverb tells us that "a picture is worth ten thousand words", but yet one is forced to question

the absolute accuracy of the proverb as it probably errs on the conservative side.

Equation (1) also says nothing about how efficiently the $(f_2 - f_1)$ frequency band is used. With the ordinary television signal, the energy distribution throughout this band is similar to that shown in Fig. 1. It is seen that there are energy concentrations in the region of the line-scan frequency[2-3]. This frequency may be found from

$$f_o = (f)(n) \quad \ldots\ldots\ldots\ldots\ldots\ldots (2)$$

Where

f_o = line scan frequency, cycles per second
f = frame repetition rate, or the number of complete pictures per second
n = total number of scanning lines per frame.

For the present standards (see Table I) $f = 30$ and $n = 441$, making $f_o = 13{,}230$ cycles per second. Concentrations of energy will then be found in the regions surrounding 13.2 kc, 26.4 kc, 52.8 kc, etc., the amount of energy decreasing greatly as the frequency increases. Even though the actual shape of these concentrations change with picture content, it is obvious that the $(f_2 - f_1)$ frequency band is not being used to the fullest extent. The use of double-side-band transmission is also representative of inefficient use of the $(f_2 - f_1)$ band[7].

So even though equation (1) is highly vulnerable from the quantitative standpoint, it does rest upon a basic law which demands a payment in the form of an increased frequency band required in exchange for an increase in picture quality.

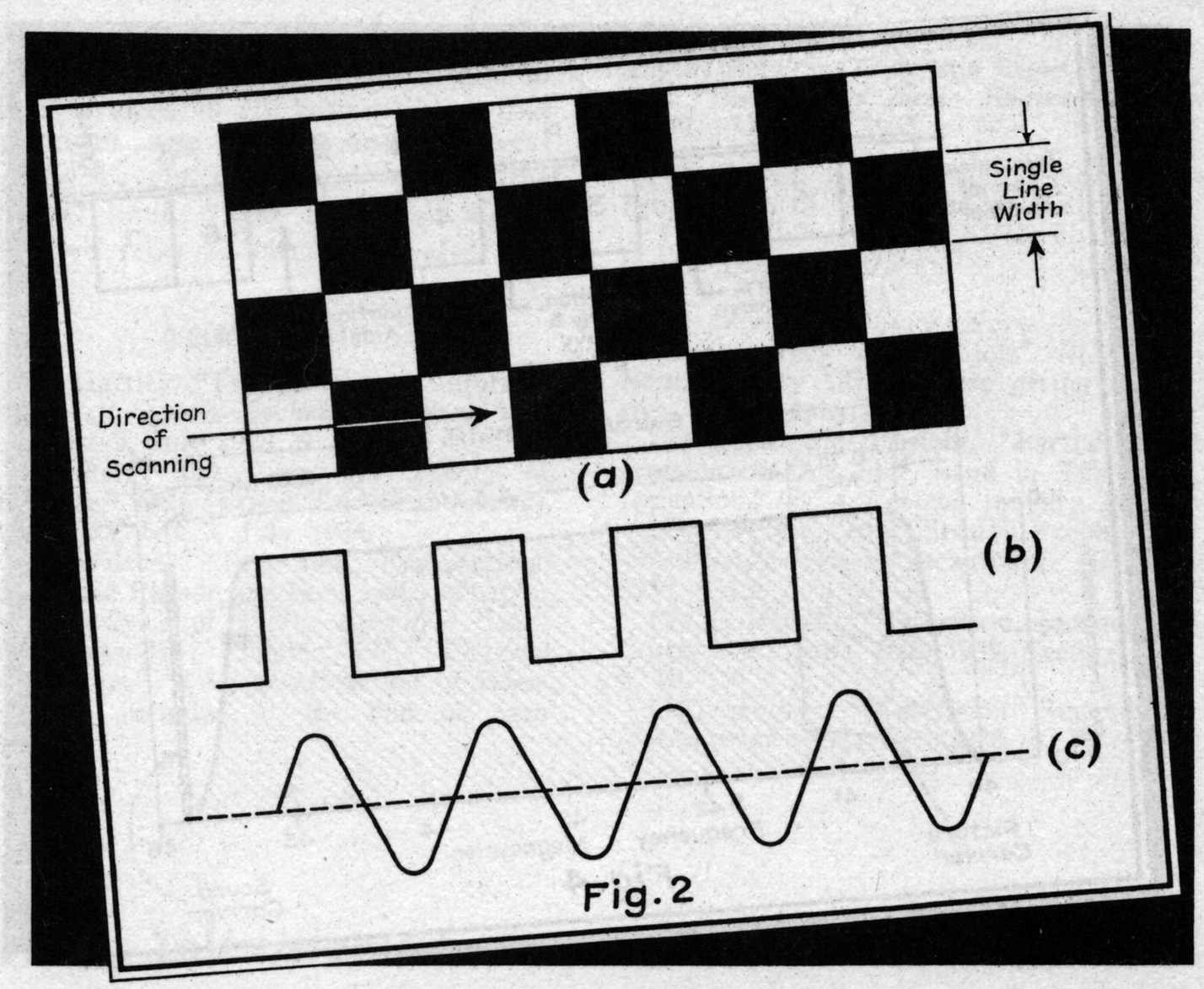

Fig. 2

TABLE I

SHOWING A SUMMARY OF SOME OF THE MAJOR STANDARDS PROPOSED BY RMA TELEVISION COMMITTEE

Channel Characteristics		
Television channel width...	6	mc
Separation between sound and picture carriers..... (Sound carrier higher frequency than picture carrier)	4.5	mc
Guard band between sound carrier and high-frequency edge of channel.....	0.25	mc
Picture Characteristics		
Frame frequency.....	30	
Field frequency for interlacing..	60	
Number of lines per frame.....	441	
Aspect ratio $\frac{\text{width}}{\text{height}}$.....	$\frac{4}{3}$	

FREQUENCY BAND WIDTH DETERMINATION

A common method of determining the frequency band required for the transmission of television images will be described which, although criticized by many for its crudeness, does give a physical picture of the process. This analysis is based upon the scanning of a checkerboard pattern with squares the size of the elemental areas. That is, the squares are the same width as the scanning spot. The theoretical signal resulting from scanning across one line of the pattern of Fig. 2-A[8] is shown as the rectangular wave of Fig. 2-B. Neglecting such things as aperture distortion, etc., the rectangular wave can be simulated by the sine wave of Fig. 2-C, and its frequency can be determined from the speed of the scanning spot. This, the frequency band representing the scanning of these alternate black and white squares, which represents the worst possible conditions of picture resolution, is given by

Approx. frequency band required

$$= \frac{1}{2} n^2 R f \quad \ldots\ldots\ldots\ldots (3)$$

where

n = number of lines per frame
f = number of frames per second

$$R = \text{aspect ratio} = \frac{\text{width}}{\text{height}} \text{ of picture}$$

Practical experience has indicated that the value calculated from equation (3) is a pessimistic figure and that only about 70% of this band is actually needed. Adopting the standard motion-picture aspect ratio of 4/3 and lumping 1/2, the 0.7 factor and the 4/3 aspect ratio into one constant, equation (3) becomes

$$\text{Actual Frequency band required} = 0.47\, n^2 f \quad \ldots\ldots\ldots\ldots (4)$$

Let us calculate an example using the present standards of $f = 30$ frames per second and $n = 441$ lines per frame. This results in a calculated necessary frequency range of 2.75 mc, which, with double-side-band transmission, calls for a frequency band of 5.5 mc plus enough for the accompanying sound and the necessary guard bands. The frequency band required is directly proportional to the frame repetition frequency and proportional to the square of the number of lines. Doubling the number of lines gives rise to quadrupling the frequency band required.

RESULTS OF DEMANDING WIDE FREQUENCY BAND

Here we see the penalties we must pay for transmitting lots of information at a rapid rate as, for instance, a television picture which has high quality

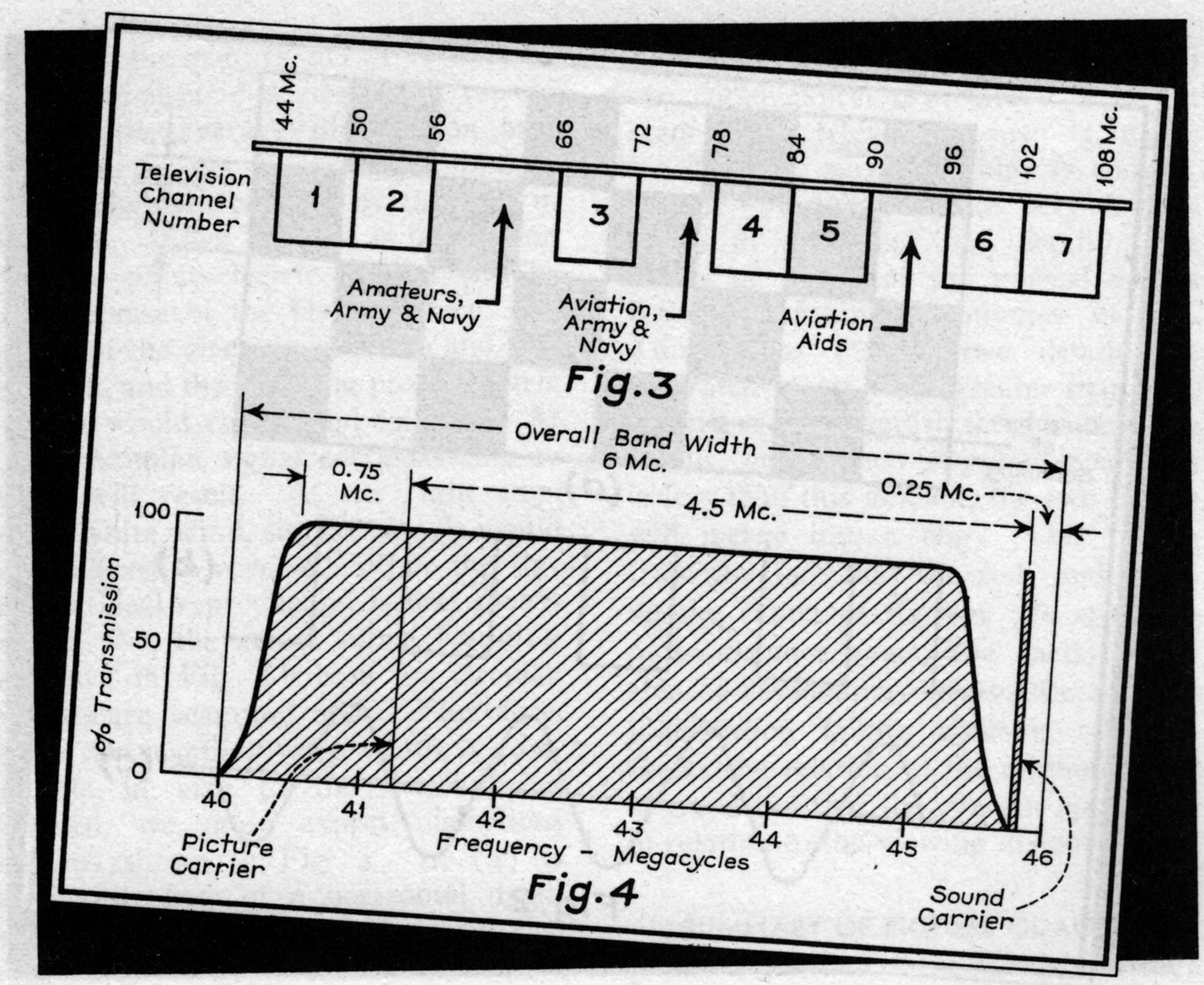

and which shows motion. The penalty, of course, is the wide frequency band, and the use of these wide frequency bands makes the case for television quite difficult.

First, it is evident that a series of 6-mc transmission channels is not available in the common radio spectrum as usually used today. The entire broadcast band is only about 1-mc wide and even if this region were unused, it would not be satisfactory because the side-bands generated would be such a large percentage of the carrier. A ratio of about ten-to-one between the carrier frequency and the highest modulating frequency is highly desirable from the circuit design standpoint. The spectrum from a few hundred kilocycles to several megacycles is already allotted to a multitude of different services. The prior rights of these services on these frequencies must be respected. All of these factors point toward the utilization of the ultra-high-frequency regions, the propagation characteristics of which relatively little is known. But considerations taking into account the lack of sky-wave, the video-frequency band width, the urban propagation characteristics, and apparatus limitations, have led to the adoption of the region around 40 to 100 mc for television transmission.

One characteristic of these waves[4,5,6] from 3 to 6 meters is that they behave very much like light in that they tend to cast shadows behind mountains, etc. They also are not ordinarily reflected from the ionized layers except at acute angles, and thereby do not follow around the curvature of the earth. This, of course, limits the service area materially, 30 to 50 miles[9] being the general order of maximum distance to which satisfactory signals can be transmitted. The absolute distance, however, depends upon many factors such as height of transmitting antenna, height of receiving antenna, intervening structures or hills, and the base noise level of the locality. Interference from automobile ignition systems is particularly troublesome at these frequencies causing a speckled picture (giving the appearance of a snowstorm) and often the temporary loss of synchronization. The signal strength must be high enough to override such interference of local origin. In general, a single transmitter of moderate power can cover a metropolitan area very well at these frequencies.

Television will not have reached the acme of development until it too has an interconnected network of stations from coast to coast. The short transmission range complicates this problem greatly for the type of interconnecting links that can transmit the necessary wide frequency bands are very expensive. Coaxial cables have been developed to the point where they can be used for such purposes, and the recent progress in the development of wave-guides, which are metallic tubes filled with some dielectric, appears to have merit for this purpose. Another possible means of interconnecting television transmitters lies in the utilization of highly directional beam radio transmitters. Frequencies of the order of hundreds of megacycles are ideally suited for the design of highly directional radiating systems. It seems entirely feasible to operate these receiving-transmitting relay links unattended. The cost of such systems, whether special land lines or radio links, is very high at the present state of development.

STANDARDS OF TELEVISION TRANSMISSION

For a successful service, it is necessary that any television receiver manufactured any place in the United States operates satisfactorily on transmissions from any television broadcast station in the United States. In order to accomplish this with such a complex system, the necessity for some close cooperation between manufacturers and television broadcasters is obvious. This cooperation has been realized in this country through the efforts of the Television Committee of the Radio Manufacturers Association[10]. This committee to formulate standards was composed of men representing practically all of the major television organizations. It is evident that if this committee mutually agrees upon television standards, the television industry which they represent will abide by them for the benefit of all, including the consumer.

This committee has been working since 1935, and it was not until the first of 1939 that the final decisions were completed. The Federal Communications Commission has made experimental allocations upon the basis of these standards. It is fortunate that such thorough investigation has preceded the formulation of these standards, for once adopted, they will tend to solidify techniques. The further the advance before solidification, the greater the net progress.

THE PROPOSED STANDARDS

Table I gives a summary of the standards proposed by the RMA Television Committee which are of the most interest at the receiving end. Fig. 3 shows graphically the location of the seven television channel assignments, each of 6-mc width. In addition to these seven channels between 44 and 108 mc, there are twelve additional 6-mc channels tentatively set aside for television between 156 and 294 mc. These are considered more important for relay and research purposes than for regular

television broadcasting at the present time. To allow room for the increase in definition and the resulting increase in frequency bands, vestigial side-band transmission is contemplated. A typical channel (Channel I) is portrayed in Fig. 4 using vestigial transmission. One side-band (the upper one) is transmitted completely and 0.75 mc of the lower side band. Beginning at this point, the lower side band is attenuated as rapidly as possible with circuits available for operation at these frequencies. The overall band width is 6 mc. A 0.25-mc guard band is allowed between the upper edge of the channel and the sound carrier. The picture carrier is placed 4.5 mc below the sound carrier.

Because of the relative crowding of the region within the channel as shown by Fig. 4, and because television channels are adjacent to each other and to other services, it will be imperative that the lower side band transmitted vestigially be cut off entirely within the channel limit. The need for highly selective receiver circuits is also evident.

BIBLIOGRAPHY

(1) Hartley, "Transmission of Information," *Bell System Technical Journal,* Vol. VII, No. 3, July 1928, p. 535.

(2) Mertz and Gray, "A Theory of Scanning," *Bell System Technical Journal,* Vol. XIII, No. 3, July 1934.

(3) Wilson, "Television Engineering" (Sir Isaac Pitman and Sons Ltd.), Chapter IV, "Analysis of Finite Aperture Scanning Methods"; Chapter XII, "Physical Limitations." (An excellent list of references is included at the end of each chapter.)

(4) Jones, "Propagation of Wavelengths Between Three and Eight Meters," *Proc. Institute of Radio Engineers,* Vol. 21, No. 3, March 1933, p. 349.

(5) Trevor and Carter, "Notes on Propagation of Waves Below Ten Meters in Length," *Proc. I.R.E.,* Vol. 21, No. 3, March 1933, p. 387.

(6) Beverage, "Some Notes on Ultra-High-Frequency Propagation," *RCA Review,* January 1937. (Also giving extensive bibliography.)

(7) Pock and Epstein, "Partial Suppression of One Side Band in Television Reception," *RCA Review,* January 1937.

(8) Everest, "Amplification Problems of Televison," COMMUNICATIONS, January 1938, p. 15.

(9) Goldsmith, "Television Economics," COMMUNICATIONS, Feb. 1939, Section A-1, p. 18.

(10) Murray, "Television Standards," COMMUNICATIONS, Dec. 1938, p. 14.

Part III: *Television Cameras*

IT makes little difference where one might go throughout the world examining electronically-operated television pick-up devices, he will probably find only variations from the two fundamental patents issued originally in this country, one to V. K. Zworykin about 1928[1] and the other to P. T. Farnsworth about 1931[2]. These two devices pretty much dominate the international television picture at the present time. In foreign countries, the television cameras may appear under unfamiliar names, but a closer scrutiny will probably reveal the basic principles of operation of one of the two cameras to be described in this installment. For instance, in England the Emitron camera of the Marconi-E. M. I. Company resembles Zworykin's *Iconoscope,* and the Baird Electron Camera is similar to Farnsworth's *Image Dissector.* Because of this fact, a study of the two pick-up systems used so extensively in the United States today will give us an up-to-date working knowledge of the television pick-up systems of the world.

In Part I of this series, the necessity for scanning and for the translation of the average light level of each incremental area of the picture into an electric current of corresponding intensity was pointed out. In both types of television camera tubes widely used today both of these processes, i.e., the scanning and the optico-electro translation, occur within the same device. In addition to this, several models also include means for amplification of the feeble signals so that they have a fighting chance against the circuit noises.

The operation of the Image Dissector is made clear by Fig. 1. The image to be scanned is focused by a conventional system of lenses onto the cathode surface which has been treated uniformly for photo-electric emission. It is evident that the bright areas will cause many electrons to be emitted and that the darker regions of the image will cause fewer electrons to be emitted from this photo-cathode surface. The anode in the opposite end of the tube is held at a positive potential with respect to the cathode so that all of the photo-electrons emitted will be accelerated toward the anode. Leaving the photo-electric cathode, then, is a beam of electrons about the size of the image whose electronic density along its cross-section will vary in a manner similar to the light variations over the image as it falls upon the cathode. In other words, if one could take an imaginary slice from this electron bundle leaving the photo-cathode he would find that in the regions of the slice corresponding to the light parts of the image, there would be found many electrons and the areas corresponding to the dark parts would be represented by only a relatively few

Schematic diagram of Image Dissector tube.

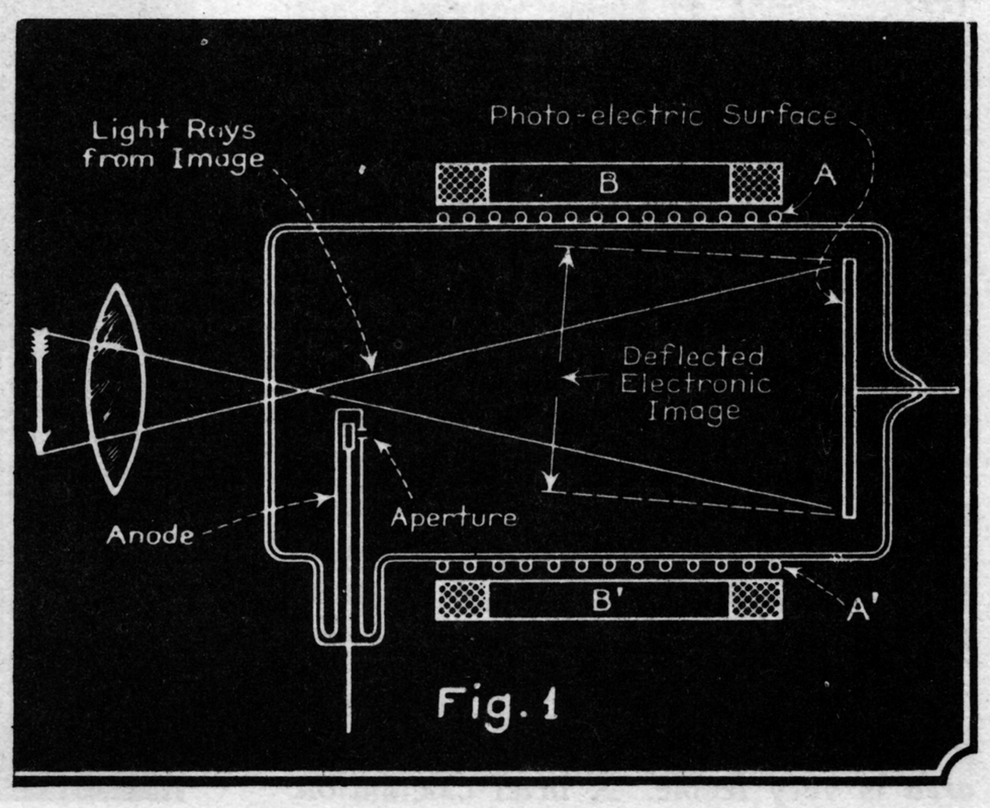

electrons. This arises from the fact that the photo-electric emission from the cathode is a function of the intensity of the impinging light.

Because all of the electrons in a beam possess a negative charge, there will be mutual repulsion between the various electrons comprising the electronic image. This effect is further augmented by slight initial variations in velocity and direction as the photo-electrons are emitted. These effects tend to make the electronic image bundle to spread apart, but this spreading is minimized by focusing coils A, A′ mounted coaxially with the tube. Its magnetic field is parallel to the direction of travel of the electrons, and any electron attempting to travel diagonally to this magnetic field has a force acting upon it tending to bring it back into line.

Above and below the evacuated cylinder is a pair of coils (B and B′) connected in series, so situated that their axis is perpendicular to that of the tube. The magnetic field resulting from current flowing in these two coils will result in the electronic image bundle being deflected upward or downward in the plane of the paper in Fig. 1. Another pair of coils is arranged one on the side of the observer and one on the back side so that its magnetic field is perpendicular both to the axis of the tube and the plane of the paper. By means of a current in these coils, the electronic image bundle may be deflected toward or away from the observer. These two sets of coils make it possible to deflect the electronic image at will within the tube by the simple expedient of sending currents of suitable wave form through the coils outside the tube.

As the electronic image approaches the anode pillar, a few electrons will go through the aperture, hit the tiny target inside the anode pillar structure, and this constitutes the signal current. The two sets of deflecting coils are so energized that each picture element is scanned in the proper sequence. For RMA standards of operation, the image beam would be deflected horizontally 441 times per second and vertically 60 times per second to give a 441-line, 30 frames per second, interlaced image. The entire electronic image is moved across the aperture to accomplish the scanning process in this Farnsworth Image Dissector, while the scanning point is movable over a stationary image in most other systems.

The photo-electric current representing the light intensity of one *elemental area* is very feeble. A brief calculation will confirm this. Let us assume the use of RMA standards of 441 lines per image, 30 complete frames per second, and aspect ratio of $\frac{4}{3}$. The number

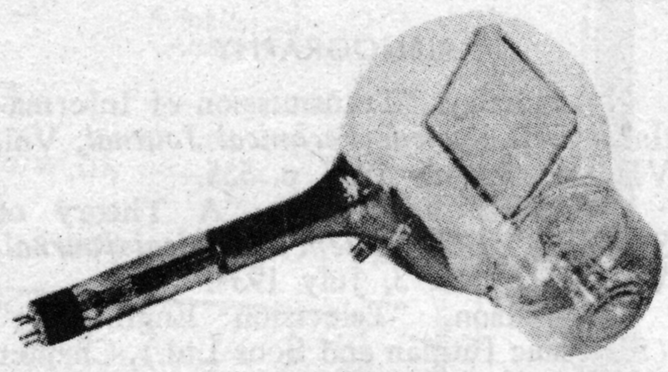

Fig. 2. The basic Iconoscope. Photo courtesy RCA Review.

of elements per frame is $(441)^2\frac{4}{3}$. $= 259{,}000$. As there are 30 of these frames per second, the time that one single elemental area will be in front of the aperture will be $\frac{1}{(259{,}000)\ (30)}$ seconds $= 0.129$ microsecond. Now, let us assume the use of an F-4.5 lens in front of our Image Dissector throwing a brightly illuminated outdoor scene upon the photo-electric cathode. Under these conditions, the total light falling upon the cathode will be in the order of 0.1 lumen. Let us also assume that the photo-electric surface has a sensitivity of 75 microamperes per lumen, an extremely sensitive surface which has been obtained by much research work. The photoelectric current representing a single elemental picture area is $\frac{(75 \times 10^{-6})\ (0.1)}{259{,}000} = 28.9 \times 10^{-12}$ amperes or 28.9 micromicroamperes per element. This current flowing for the 0.129 microsecond is equivalent to 3.74×10^{-18} coulombs which is equal to 23.5 electrons. In an extremely generous mood, we will call it an even 24 electrons, which, one must still admit, is not much of an electric current. This signal current would undoubtedly be lost in the noise associated with ordinary thermionic amplifiers and because of this inherently feeble signal from the Farnsworth Dissector, electron multipliers are used. In one of the later models, this multiplier is built into the anode pedestal.

An early type of RCA Iconoscope (Greek: "image observer") television camera tube is shown in the photograph of Fig. 2. A schematic drawing of a commercial model (Type 1849 and 1850) recently put upon the market is shown in Fig. 3. The type 1849 Iconoscope is designed for motion-picture pick-up, while the type 1850 is much more sensitive and is intended for direct pick-up at low levels of scene illumination.

The heart of the Iconoscope is the mosaic electrode which has been especially treated for high photo-electric emission. The mosaic may be formed by the deposit of a multitude of tiny silver globules upon an insulating sheet such as a thin sheet of mica. These globules are then photo-sensitized by caesium and each globule, which is in-

Schematic drawing of an RCA Iconoscope.

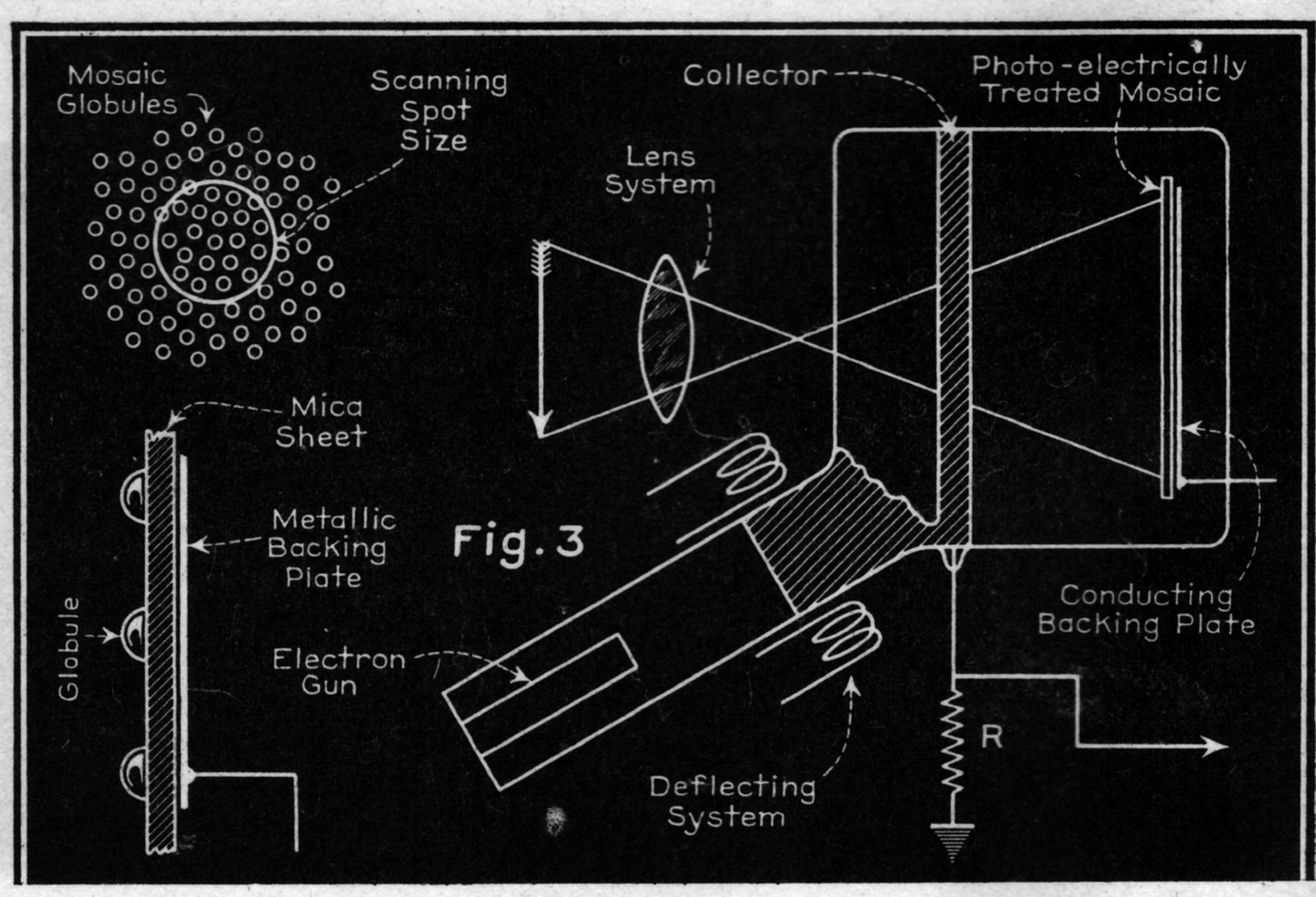

sulated from all its neighbors, becomes a minute photo-electric cell. These globules are so small that there may be dozens of them in one elemental area of the mosaic or the area of the scanning spot. In general, about 30% to 40% of the area of the mosaic is covered by the globules.

An electron gun and associated beam deflecting system are mounted in the neck of the Iconoscope. This gun is very similar to that found in the usual cathode-ray tube and consists of a thermionic cathode for emission of the electrons, means for accelerating the electrons, and means for focusing them into a very fine beam. By means of an electromagnetic or electrostatic system (the Iconoscope uses the former), the beam may be deflected to any spot on the mosaic electrode. To meet the RMA Standards, this beam would be swept horizontally across the mosaic 441 times per frame, and the beam would also be deflected slowly in a vertical direction so that each line would fall adjacent to the preceding one, the 441 lines scanning all parts of the mosaic surface every $\frac{1}{30}$th second.

Let us examine the mechanism by which the signal currents are generated. The image is focused upon the mosaic by means of a suitable external lens system. The light falling upon the mosaic causes photo-electrons to be emitted from each element of the mosaic. The sensitized silver globules lying in a part of the image which is light will give off more electrons than the dark portions. The electrons given off from each mosaic element photo-electrically are attracted to the silver coating on the inner side of the tube which constitutes the anode and which is held at a positive potential with respect to the mosaic. It is obvious that the leaving of the electrons from the mosaic element will

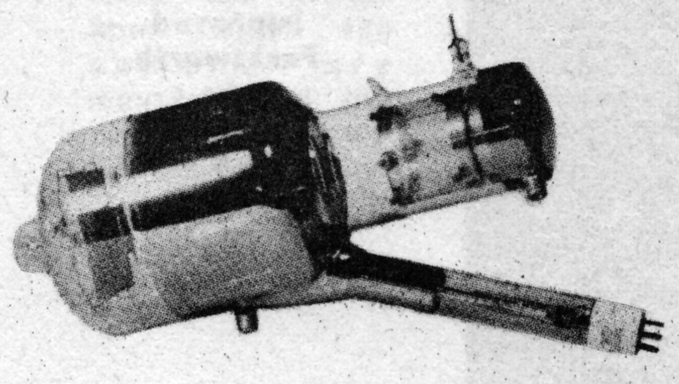

Fig. 5. The new Image Iconoscope. RCA Photo.

leave a deficiency of charges upon it and, by virtue of the capacitance existing to the metallic backing plate on the opposite side of the mica sheet, this will actually result in a charging of this tiny condenser. The magnitude of the charge will depend upon the intensity of the light falling upon it for a given length of time. Because each of these mosaic elements is highly insulated from every other element, it is seen that a scene focused upon the mosaic will immediately give rise to a potential distribution over the face of the mosaic which varies electrically as the light and shade of the scene itself varies optically.

The function of the electron beam is to discharge these tiny charged condensers in a certain order. The sweeping of the electron beam across a charged element will mean the equalization of the charge, or the discharge, of that condenser element. The charging current which flowed to perform this equalization is proportional to the amount of charge on the element, which is in turn porportional to the intensity of the light falling upon that element. The current which flows through resistor R of Fig. 3 produces a voltage which varies as the light variations along that particular scanning line, and this constitutes a feeble signal voltage which can be amplified and utilized.

As mentioned before, the area covered by the scanning beam contains many of these mosaic elements. Because of this, the signal output of one elemental area of the mosaic will be proportional to the average charge attained by all the globules in that elemental area.

The sensitivity of the Iconoscope is much greater than the fundamental Dissector. This results from the storage effect that takes place by the more or less continuous process of charging the minute condensers. While the signal from a single elementary area of the Farnsworth Dissector tube might be in the order of 24 electrons, the signal from a single elemental area of the storage type would be much greater because its charging process has been progressing while all the rest of the approximately 259,000 elemental areas were being scanned in turn. In other words, the Dissector tube has only the time required to scan a single element for the photo-electric emission of its signal current (about 0.13 microsecond (while the Iconoscope merely releases during this same time a charge that has been accumulated for about $\frac{1}{30}$ second. The theoretical gain of the Iconoscope over the Dissector would be about 259,000, but an advantage of only a few thousand has actually been realized.

Schematic drawing of tube shown in Fig. 5.

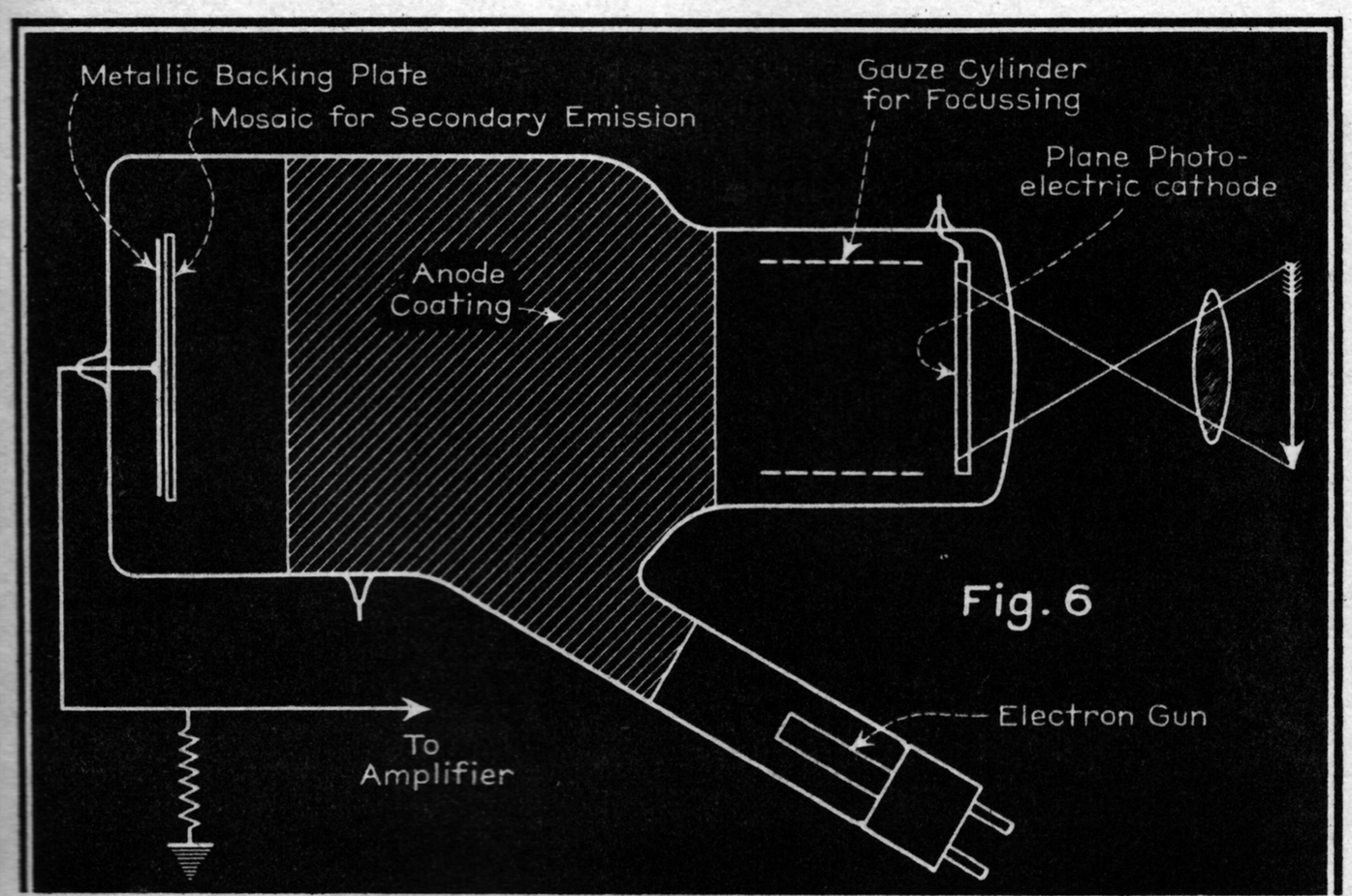

The Improved Farnsworth Pick-up Tube

An interesting thing about the improved types of Farnsworth and RCA tubes is that the new Farnsworth tube utilizes a photo-mosaic and the new RCA tube uses electronic images.

The improved Farnsworth tube is shown schematically in Fig. 4. The image is focused upon the special "photo-island" grid after passing through the transparent anode on the end of the tube. This grid has about 160,000 holes punched per square inch in a thin nickel plate. One side is coated with a dielectric material which has deposited upon

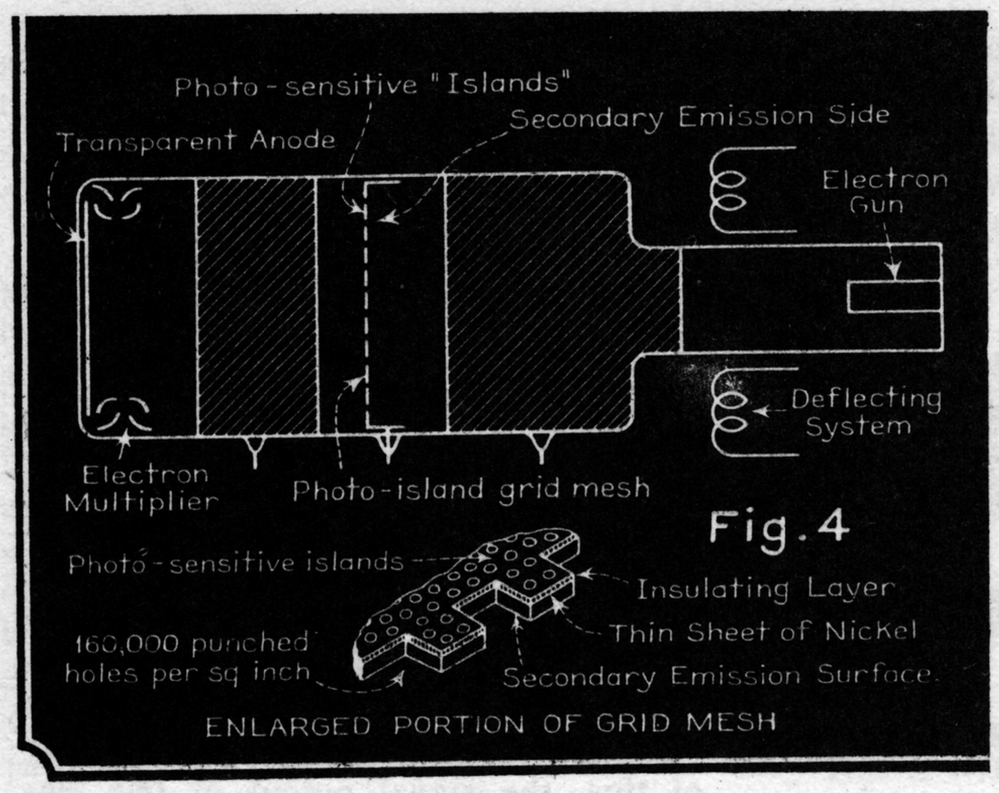

Illustrating the improved Farnsworth tube.

it many photo-sensitive "islands" which are so-called because they are insulated from each other as are the globules on the Iconoscope mosaic. The image focused upon this "island" surface causes an electrical potential image to be set up over its face. The beam of electrons from the gun hit the special surface on the nickel plate liberating copious quantities of secondary electrons. This cloud of secondary electrons acts as a rapidly moving virtual cathode source, and these electrons are drawn through the tiny holes of the mesh to a degree depending upon the amount of positive charge built up on the "photo-islands" on the other side. In other words, the "photo-islands" act as the control grid of a triode in that they control the number of electrons which shall go to the electron multiplier to represent that particular area. The intensity of illumination determines the amount of positive charge on the islands, and this positive charge determines the number of electrons allowed to go to the electron multiplier which constitutes the signal current.

The main advantage of this tube is that its sensitivity is increased to about ten times that of the conventional Iconoscope. Another advantage is that a peculiar shading signal common to the Iconoscope and evidently a result of roving areas of spurious charges over the mosaic does not appear. A difficulty at the present time is constructing the photo-island mosaic so that its charge leaks off in about $\frac{1}{30}$ second so that no residual charge remains when the next frame starts.

Improved RCA Iconoscope

The Image Iconoscope recently described has resulted in greatly superior performance. A photograph of this tube is shown in Fig. 5, and a sectioned schematic diagram is shown in Fig. 6.

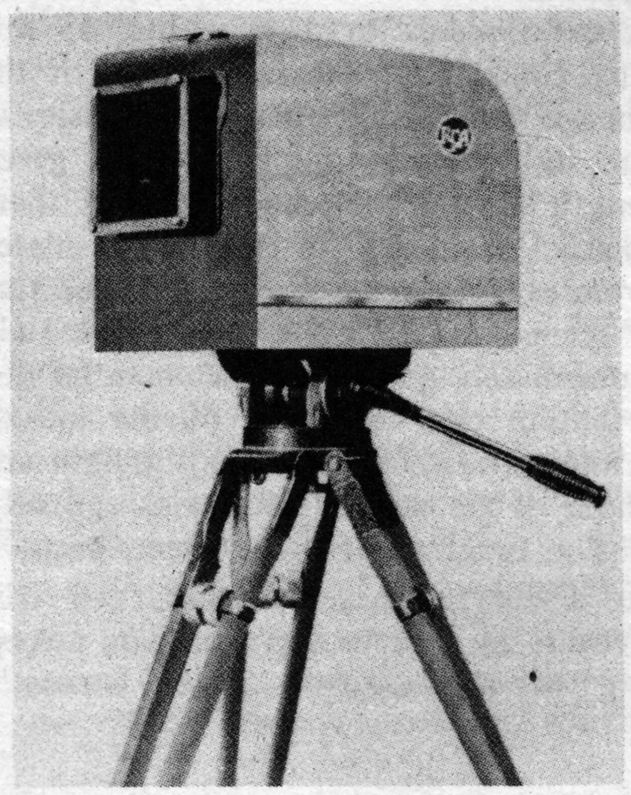

Fig. 8. A new RCA Iconoscope television camera.

Referring to Fig. 6, the image to be televised is focused upon the plane photo-electric cathode near the end of the tube. By virtue of the potential existing between the anode and this cathode, an electronic image is released from the opposite side of the cathode. With the aid of special focusing arrangements, the electronic image impinges upon the mosaic at the opposite end of the tube. The only major difference between this mosaic and the one in the basic Iconoscope is that this one is not treated for photo-electric emission. The electronic image hitting the mosaic knocks off secondary electrons from the globules. In this manner, the potential distribution corresponding to the image distribution of light and shade is set up over the face of the mosaic. The secondary electrons are carried off by the anode and leave a deficiency of electrons or a positive charge on each tiny condenser which each globule forms with the metallic backing plate. The value of these charges depend upon the number of secondary electrons given off, and this in turn depends upon the number of photo-electrons representing that particular part of the electronic image. The electron gun and deflecting system scans the mosaic in the usual way, and the signal is taken off as in the ordinary Iconoscope.

The advantages of this pick-up tube lie mainly in the fact that the sensitivity is increased to about ten times that of the old Iconoscope due to the fact that secondary emission is more effective than photo-emission in building up the charges on the mosaic. Another advantage is that the photo-cathode is so close to the end of the tube. This allows the use of short focal length lenses, and, consequently, a large aperture optical system can be used. The spurious shading signal generation effect is still present in this tube, though in at least some cases is slightly less severe.

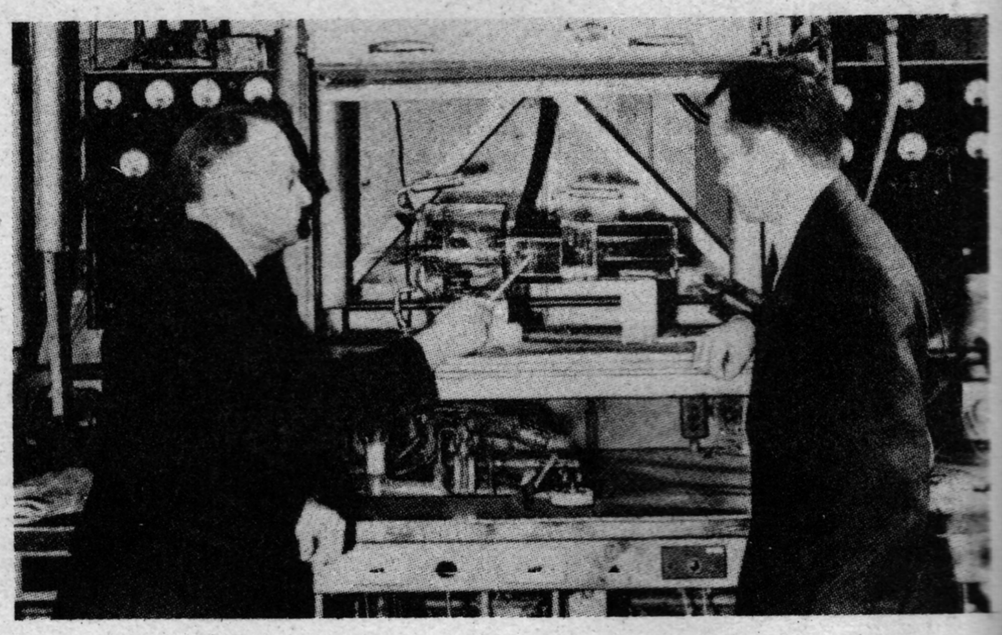

Fig. 7. Two well-known television research engineers, Dr. V. K. Zworykin (left) and E. W. Engstrom, examine a special electronic tube. Dr. Zworykin is the inventor of the Iconoscope. RCA photo.

BIBLIOGRAPHY

(1) U. S. Pat. No. 1,691,324 (1928).
(2) U. S. Pat. No. 1,773,980 (1931)
(3) "Television by Electron Image Scanning," Farnsworth, *Journal of Franklin Institute;* Vol. 218, Oct., 1934.
(4) "Television by Electron Image Scanning," Farnsworth, *Electronics,* Aug., 1934.
(5) "Farnsworth's New Tube," *Electronics,* Dec., 1938, pages 8, 9.
(6) "Theory and Performance of the Iconoscope," Zworykin, Morton, and Flory, *Proc. IRE,* Aug., 1937.
(7) "Iconoscopes and Kinescopes in Television," Zworykin, *RCA Review,* July, 1936.
(8) "The Iconoscope—A Modern Version of the Electric Eye," Zworykin, *Proc. IRE,* January, 1934.
(9) "Tubes for Television Show Technical Advances," *Electronics,* July, 1938, p. 12, 13.
(10) "Television Economics," Goldsmith, Part II, Section E-1 (Video Pick-up Equipment), COMMUNICATIONS, March, 1939, page 19.
(11) RCA Rating Pamphlet on 1849, 1850 Iconoscopes.
(12) "The Latest Emitron Camera," *Television and Short-Wave World,* July, 1938, p. 397 (London).
(13) "A New Farnsworth 'Pick-up' Tube," *Telev. & Short-Wave World,* May, 1938, p. 260.
(14) "A New Emitron Camera," *Telev. & Short-Wave World,* January, 1938, p. 11.
(15) "A New Electron Camera," *Telev. & Short-Wave World,* August, 1937, p. 467.
(16) "The Television Camera," *Telev. & Short-Wave World,* June, 1937, p. 329.
(17) "The Baird Electron Camera," Jones, *Telev. & Short-Wave World,* Sept., 1936, p. 487.

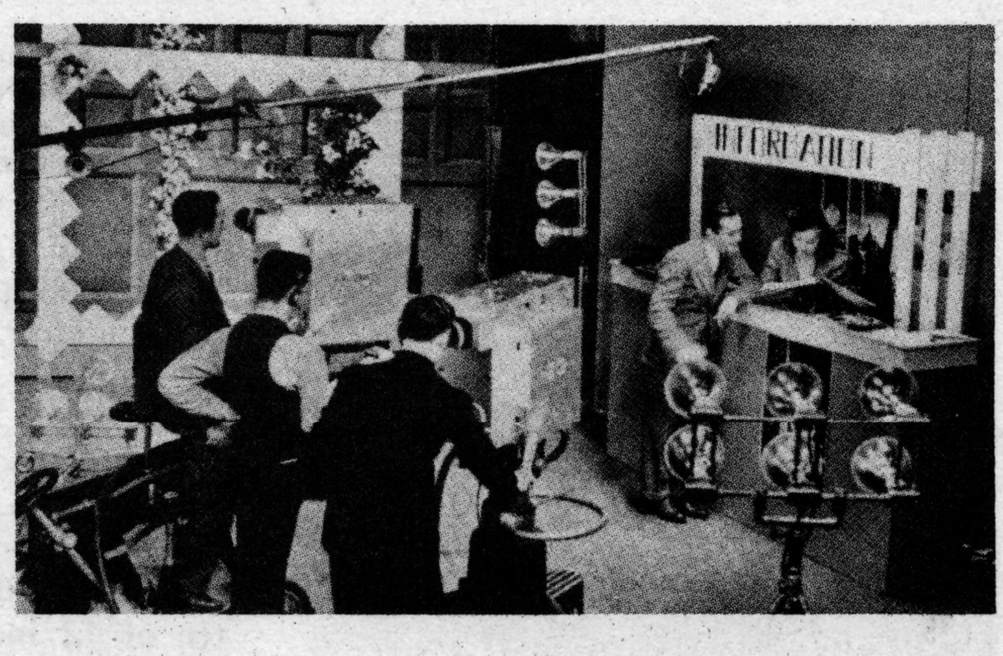

Fig. 9. A typical scene during the broadcasting of a television play. Note the trucks upon which the cameras are mounted and the powerful lights required. RCA photo.

Part IV: *The Cathode-Ray Tube as a Television Reproducer*

THIS installment will deal only with the cathode-ray tube as a television reproducer, although there are many mechanical systems by which the separate picture elements can be reassembled at the receiving end. This does not mean that the mechanical systems hold no promise for the future, but rather that in the United States at the present time practically all of the activity is confined to cathode-ray reproducers. The major limitation of the cathode-ray tube, as will be pointed out later, is the lack of light, and the mechanical systems have advantages in this regard due to the fact that they control a powerful local light source such as an intense incandescent lamp, an arc, or the recently introduced high-pressure vapor tube. The cathode-ray tube is particularly adapted to the demands of high-definition television, and this fact is largely responsible for its more or less universal adoption throughout the world at this stage of television development.

HISTORY OF THE CATHODE-RAY TUBE

Many people who have only recently become acquainted with the cathode-ray tube may be somewhat startled to learn that tubes bearing that very name have been in existence since 1876. Even earlier than this, Coulomb, and later Faraday, observed the effect of application of a high potential between two electrodes within a crudely evacuated glass envelope. The Giessler tube giving interesting color effects within its fancy glass-work was a novel result.

Better exhaust techniques, however, gave rise to the discovery of new effects, one of which was the *cathode-ray* phenomenon, so named by Plücker about 1879. The Crookes tube showed that the "rays" were more properly discrete particles leaving the cathode at right angles to its surface. These particles were later (1890) identified as electrons suggesting that a better name for *cathode-rays* would be *electron beam,* and this has been generally adopted while speaking of the beam, but not the tube itself. Many improvements have been introduced, among them magnetic focussing (1898), the hot cathode for electron emission by Wehnelt (1905), and various arrange-

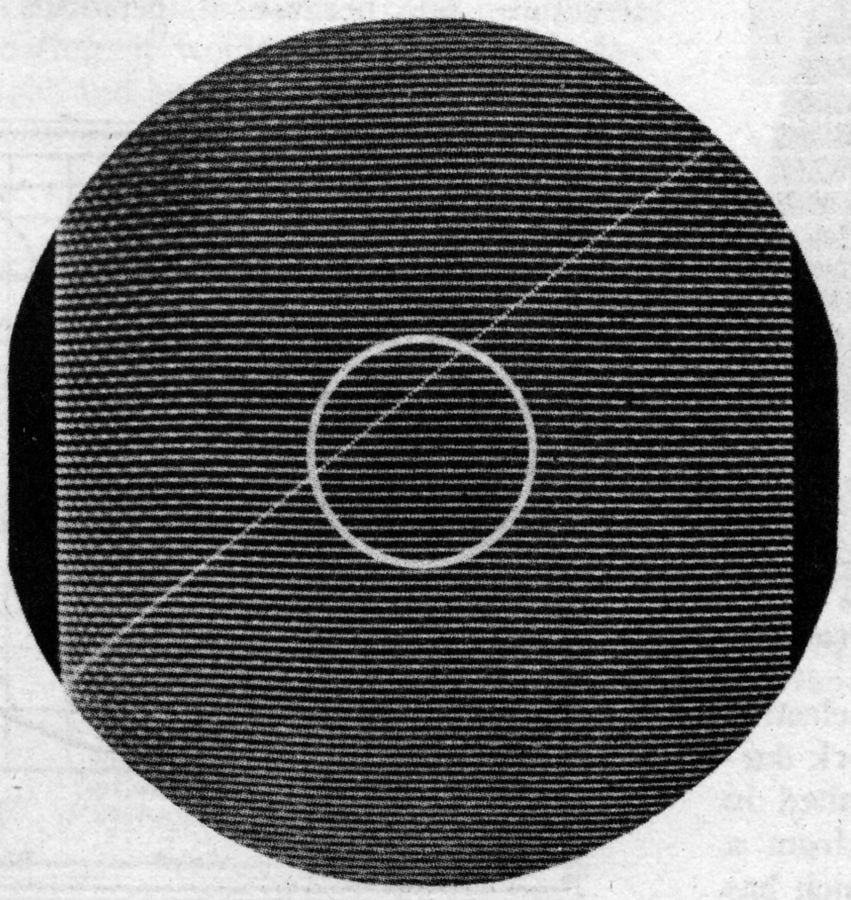

Fig. 5-a. Resolution test pattern. Grid modulated at about 2 mc/sec. Spread vertically to show individual scanning lines. Photo courtesy *IRE Proc.*

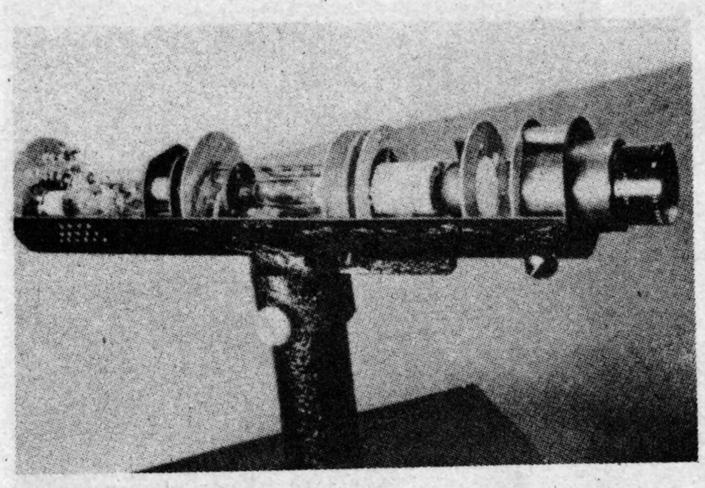

Fig. 4. An RCA projection type cathode-ray television tube. Small image can be projected on 3 x 4 ft. screen. Photo courtesy *IRE Proc.*

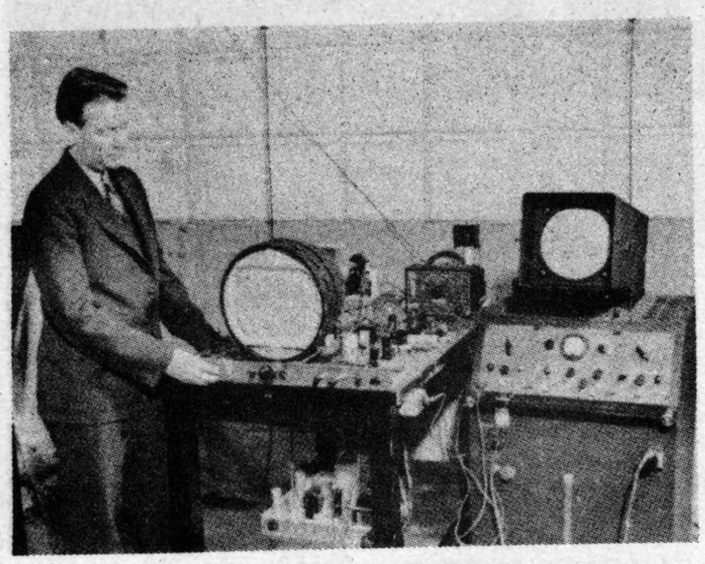

Above: Fig. 6. A 12" tube being tested with a special test pattern. RCA Photo.

Below: Fig. 8. Removing fluorescent material from a furnace. RCA photo.

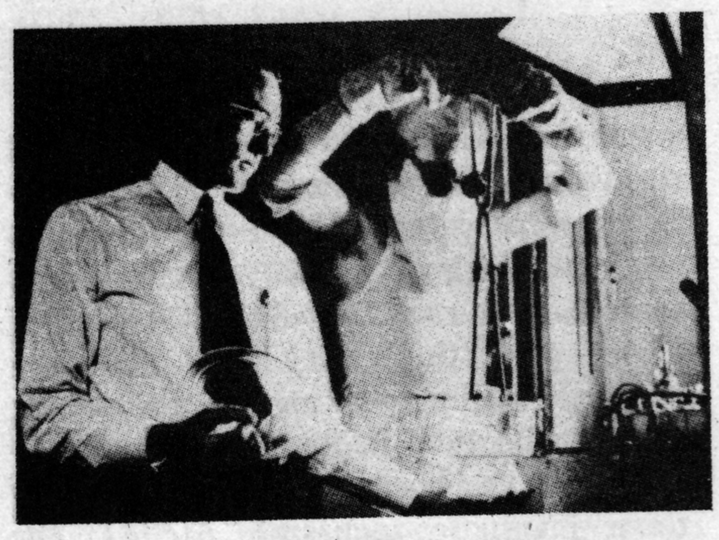

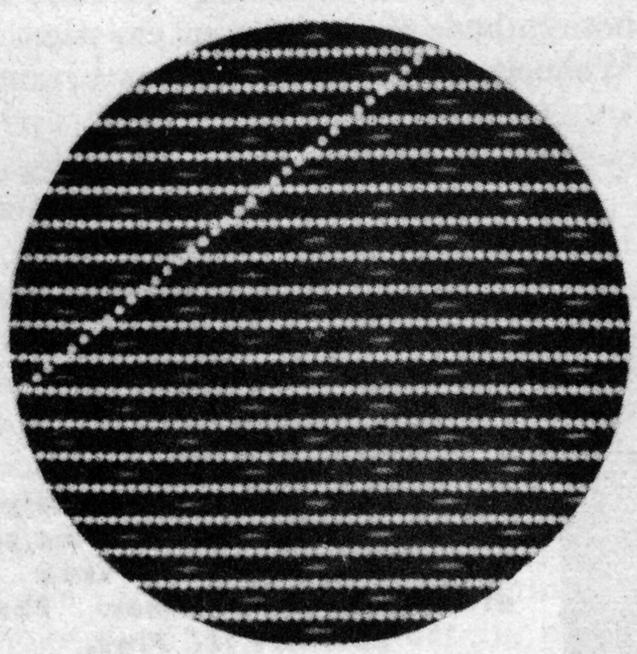

Fig. 5-b. Area within white circle of Fig. 5-a enlarged four times to show detail. Photo from *IRE Proc.*

ments for focussing the beam electrostatically. Intensive research work during the last few years has resulted in bringing the cathode-ray tube from a laboratory curiosity to a tool which has become indispensable to the communication engineer.

DESCRIPTION OF THE CATHODE-RAY TUBE

The cathode-ray tube as used today in television receivers is shown in Fig. 1. This is one of the largest tubes extensively made and has a screen diameter of 12 inches and employs electromagnetic deflection. In the neck of the tube the electron emitting and focussing elements are assembled constituting what is quite appropriately called the *electron gun.* The beam originating here is attracted by the higher potential on the various anodes and then impinges upon the fluorescent screen. The energy which the electrons have by virture of their mass and velocity is given up at the screen and some of it is translated to visible light producing a luminous spot.

Fig. 2 shows a partial section view showing the construction of a typical electron gun. At the extreme left the cathode, or the electron emitting device, is shown. The filament within the cathode sleeve is heated by an electric current which in turn heats the cathode sleeve. The end of this cathode tube toward the fluorescent screen is coated with a material which has a high electron emission efficiency when heated. The first anode, which is held at a very high potential with respect to the cathode, attracts the emitted electrons, and they are pulled through the hole in the cylinder which is usually called the *grid.* It is so called, not because of its structure, but because it performs a function comparable to the grid in the ordinary triode. The intensity of the luminous spot on the fluorescent screen is a function of the speed with which the electrons arrive and the number of electrons. With fixed electrode voltages, the speed remains constant, and the light intensity of the luminous spot is controlled by the variation of the number of electrons in the beam. This is accomplished by the grid. Because it is so much closer to the electron source, a certain low voltage applied to it has the same effect on the electron density of the beam as a very much greater voltage on the first anode. Therefore, a relatively small video signal voltage (say 20 volts) applied between the cathode and grid is sufficient to vary the beam from full brilliancy to cut-off.

The beam next passes through two holes in discs within the cylinder which comprises the first anode. The beam then passes through the second anode which may be either a hollow cylinder with a partially closed end as shown in Fig. 2 or a conducting coating on the inside of the funnel-shaped portion of the glass envelope. In either case, the electrostatic equipotential surfaces are so arranged and adjusted that the electrons in the beam may be brought to a very fine focus at the fluorescent screen. The large end of the glass envelope upon which the fluorescent coating is applied is curved an amount that will retain the spot focus even though the beam is bent in any direction by the deflection system.

Because the beam is composed of many individual electrons travelling in the same direction within a well-defined space, they should react in the same

Showing approximate spectral energy distribution compared to eye sensitivity.

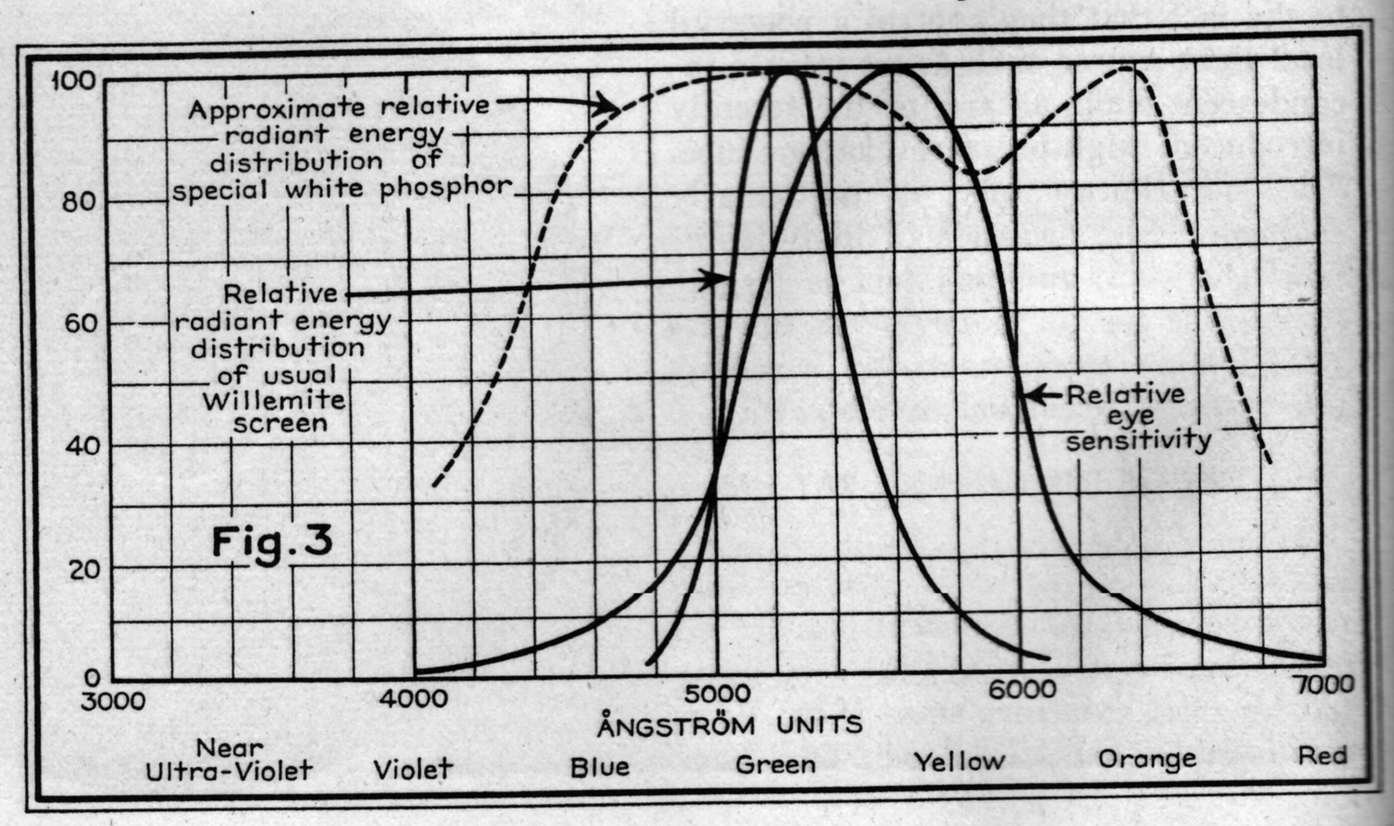

manner as electrons flowing in a conductor occupying the same space. We know that a conductor which has electrons flowing in it is surrounded by a magnetic field and that it will have a mechanical force exerted upon it if another magnetic field approaches it. This is the well-known *motor principle* upon which so many electrical devices depend. This electron beam can thus be de flected to any point on the screen by suitable currents flowing in suitably arranged coils around the neck of the tube. Two pairs of coils whose axes are oriented 90 degrees from each other are used, the whole assembly being enclosed and mounted around tube's neck.

We also know that each electron has a small but definite negative electric charge. Because like charges repel and unlike charges attract, the electrostatic deflection system of plates shown on the right in Fig. 2 will bend the beam. If the top horizontal plate is made positive with respect to the lower one, the beam will be deflected upward an amount which depends linearly upon the magnitude of the difference of potential applied. If the plate nearer the reader of the other pair is made positive with respect to the far plate, the beam would be deflected toward the reader By means of these two pairs of plates, the beam may be moved to any part of the screen. The actual requirements and relative advantages of the two types of deflection systems will be covered in some detail in the next installment.

The focussing system is quite effective as demonstrated by the photograph. of Fig. 5 (a) and (b) which has been taken from Burnett's paper.[4] Regular scanning methods were employed, and the grid was modulated at about two million cycles per second. Each of these dots is of approximately the same order of magnitude as an elemental picture area, although the lines have been separated for ease in observation. This enlarged area of Fig. 5 (b) has been taken from the center of the screen and has been enlarged four times. A certain amount of de-focussing, blurring, and change in spot shape occurs near the edges of the fluorescent screen, although this effect is not serious. Fortunately, also, the center of interest usually lies in the center of the picture.

Fig. 1. Comparing 12" television tube with a small metal tube. Both tubes are used in same receiver. RCA photo.

LUMINESCENCE

The law of conservation of energy states that energy may be transformed from one form to another, but can be neither created nor destroyed. Energy can exist in many invisible forms. For instance, a small amount of current can be passed through the filament of an incandescent lamp causing a radiation of energy, but the effects of the energy cannot be seen until enough current is passed to make the filament become white-hot and radiate energy within the visible spectrum.

In nature, there are many substances which have the power to change invisible ultra-violet radiation energy or cathode-ray energy into visible light. The study of this phenomenon is in general known as *luminescence*. This may be broken down into two parts, *fluorescence* and *phosphorescence*. *Fluorescence* is an emission of luminous radiation which stops as soon as the exciting stimulus is removed. *Phosphorescence* is that luminous radiation which persists after the excitation has been removed. For example, if a sheet of paper were coated with a certain luminous coating, it would appear white in daylight and be invisible in the dark. However, let some ultra-violet light fall upon

Above: Fig. 7. A 12" cathode-ray tube being subjected to factory tests. RCA photo.

Below: Fig. 9. Manufacturing process of joining shank and tube. RCA photo.

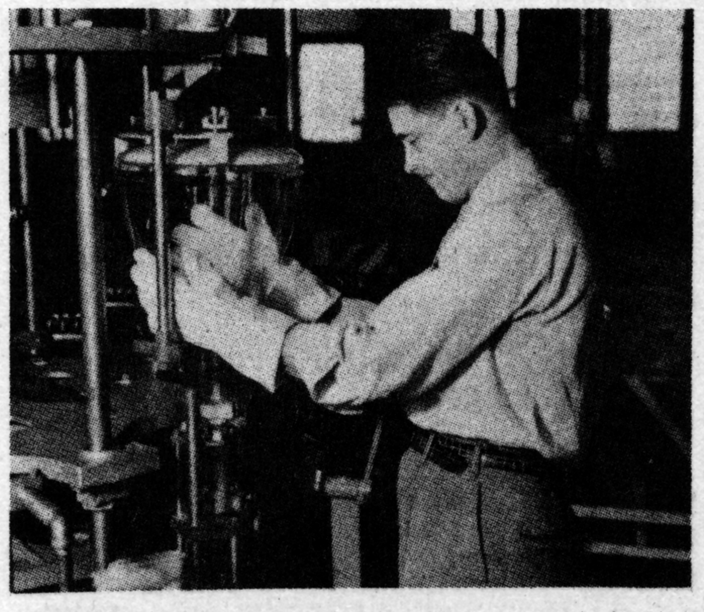

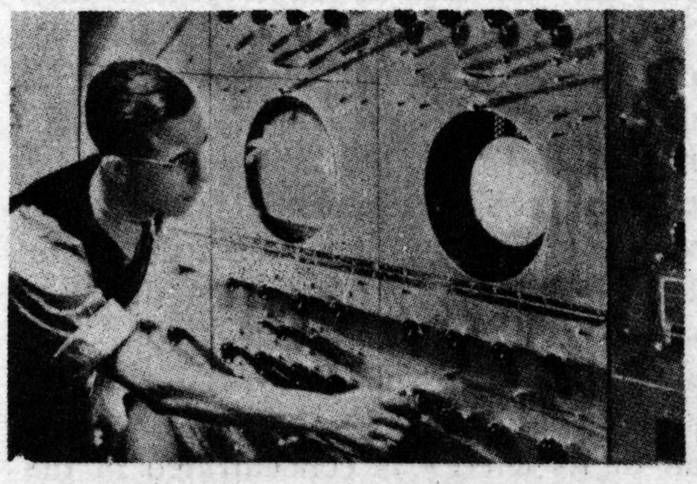

Fig. 10. A television type cathode-ray tube undergoing life test. RCA photo.

Showing a partial section view of a typical electron gun.

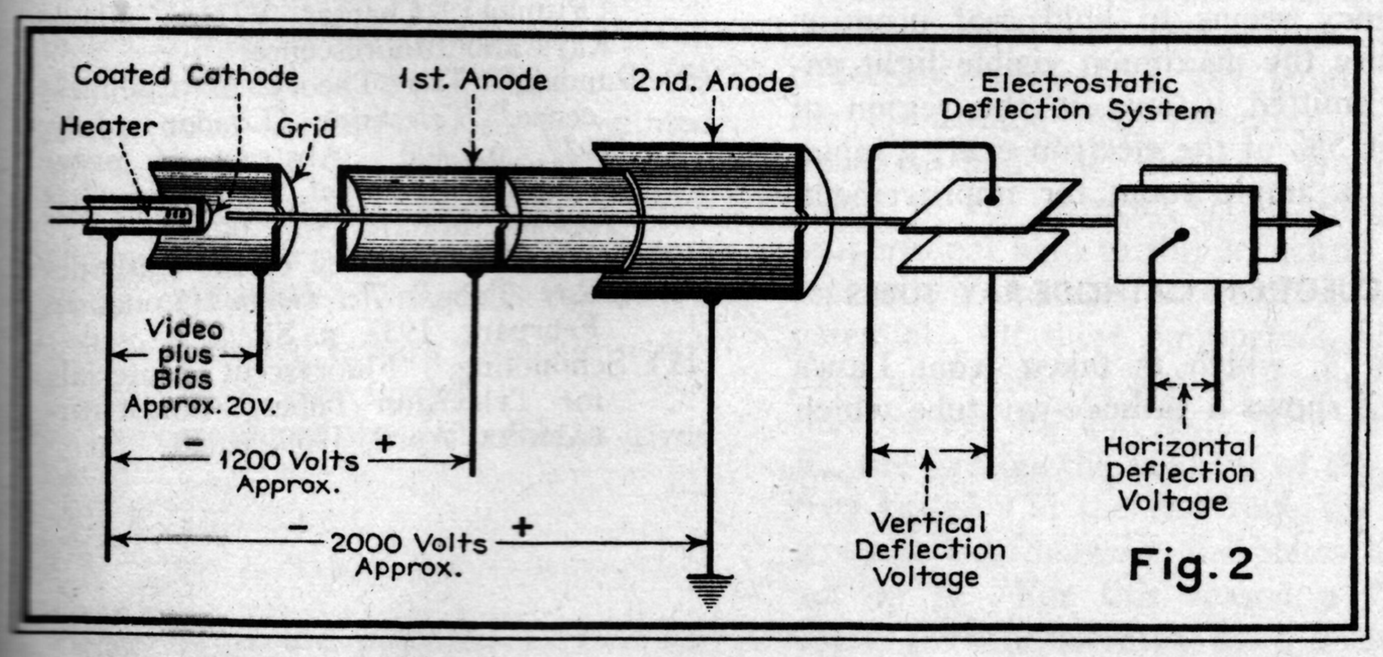

it and it fluoresces with some characteristic color. When the ultra-violet light is removed, the color continues, dying away slowly. This latter is called *phosphorescence* or after-glow. Phosphorescence continues for days or even weeks with certain substances. It is believed that *fluorescence* is associated with a change within the molecule itself while *phosphorescence* is associated with the transit of electrons from one molecule to another.

The coatings used on television cathode-ray tubes rely principally upon the fluorescent effect and, hence, are usually called fluorescent coatings. The after-glow or time lag caused by the phosphorescent effect is, in fact, usually very detrimental in television pictures. For instance, a moving part of the image would leave an eerie trail behind it. A ball thrown would appear to have a tail like a comet. Suitable screen materials should have what is termed *short persistence* or *medium persistence* characteristics. Phosphorescent characteristics of several substances as given by Levy and West[1] are:

Material	*Duration of Phosphorescence*
Calcium Tungstate	8 microseconds
Willemite	2—8 milliseconds
Zinc phosphate	About 0.25 second
Zinc sulphide with nickel	Fraction of 1 microsecond.

A screen whose relative brightness decays to within 10% of "black" in about 15 milliseconds is deemed satisfactory for television reception, and it would fall under the medium persistence classification.

COLOR OF EMITTED LIGHT OF FLUORESCENT COATINGS

The screen that has been used very extensively for general steady-state oscillographic work is the Willemite screen. This substance is found in nature and can also be made synthetically. This material has been so popular because practically all of its energy is developed in a region in which the eye is very sensitive. Fig. 3 shows the relative eye sensitivity plotted against the wavelength of light in Angström units. It will be seen that the eye is most sensitive to yellow-green light. The spectral energy curve of Willemite is shown, and it will be seen that almost all of its energy is concentrated in the green, where the eye is very sensitive.

Although cathode-ray tubes giving green light were and are used in many experimental television receivers, the fact remains that a more suitable and pleasing color would be white. The approximate spectral energy distribution of one mixture is shown as a broken line in Fig. 3. This is an inefficient arrangement because, although the white screen may have the same efficiency from the energy standpoint, much of this energy is expended at wavelengths at which the eye is relatively insensitive and, therefore, wasted as far as apparent light intensity is concerned. Even though the white screen is inefficient, the public will insist upon something very close to white because of the comparison to motion pictures which television is always subjected to.

Other difficulties confront the white television screen. For instance, the predominating hue shifts to a longer wavelength with higher intensities. The bright parts of the image may have a cast that is somewhat different from the less bright portions. In general, however, this effect is more pronounced at the lower intensities as almost any fluorescent coating tends to appear white at extremely high intensities.

The extraneous illumination falling on the screen also influences the apparent color. A screen that appears white in a totally dark room may appear tinted if an incandescent lamp is burning in the room. Added to all this, there appears to be a wide variety of individual ideas as to what a "white" screen really is.

In spite of these difficulties, several fluorescent coatings have been developed which give essentially black and white pictures.[11] One method of attack is to mix two or more highly colored substances in such a way that their composite effect is essentially a white. For instance, substances exhibiting blue and red-orange fluorescence will produce white. Progress is being made in this direction, and increasing the luminous efficiency seems to hold real promise. Because the maximum visible light energy emitted is only in the region of 4% or 5% of the electron energy input, there is ample room for improvement.

PROJECTION CATHODE-RAY TUBES

Fig. 4, which is taken from Law's paper,[2] shows a cathode-ray tube which gives a small, intense image so bright that it can be projected onto a screen giving a 3 x 4 foot projected image. Light may be compared to butter, the greater the area over which it is spread, the thinner it lies. This answers the question often asked as to why a lens system is not used on an ordinary cathode-ray television image tube. It can be done, but the picture gets dimmer the greater the area it is made to cover. This projection cathode-ray tube is designed for high-voltage operation (10,000 volts), high-electron gun current, and a small fluorescent screen image (2.4 x 1.8 inches) which is projected onto a screen for enlargement. With such terrific electron bombardment, the fluorescent screen has a much shorter life than that of an ordinary direct-viewing tube. The progress of the projection tube now seems to be bound up in the development of more durable fluorescent materials.

BIBLIOGRAPHY

(1) Levy and West, "Fluorescent Screens for Cathode-Ray Tubes," *Journal IEE*, Vol. 79, 1936, pp. 11-19.

(2) Law, "High Current Electron Gun for Projection Kinescopes," *Proc. IRE*, Vol. 25, No. 8, August, 1937, pp. 954-976.

(3) Zworykin and Painter, "Development of the Projection Kinescope," *Proc. IRE*, Vol. 25, No. 8, August, 1937, pp. 937-953.

(4) Burnett, "A Circuit for Studying Kinescope Resolution," *Proc. IRE*, Vol. 25, No. 8, August, 1937, pp. 992-1011.

(5) Zworykin, "Iconoscopes and Kinescopes in Television," *RCA Review*, Vol. I, No. 1, July, 1936, pp. 60-84.

(6) Maloff, "Direct-Viewing Type Cathode-Ray Tube for Large Television Images," *RCA Review*, Vol. II, No. 3, January, 1938, pp. 289

(7) Laverenz, "Problems Concerning the Production of Cathode-Ray Tube Screens," *Journal of the Optical Society of America*, January, 1937. Reprinted in *Television*, Vol. II, RCA Institutes' Technical Press.

(8) Wilson, "Television Engineering" (Pitman), Chapter VIII, Cathode Rays and Fluorescence.

(9) Randall, "The Theory of Luminescence," *Television* (London), July, 1937, p. 408. Abstract of paper appearing in *Royal Society of Arts Journal*, March, 1937, p. 146.

(10) Parr, "The History of the Cathode-Ray Tube," *Television* (London), February, 1937, p. 85.

(11) Schmidling, "Fluorescent Materials for Television Tubes," COMMUNICATIONS, April, 1939, p. 30.

Part V: *Electron Beam Deflection Methods*

IN an electronic television system which uses a cathode-ray tube as the reproducing element, we have seen that the electronic density of the electron beam is made to vary with the signal corresponding to the variations of light and shade of the image being transmitted. In order that the visual intelligence be successfully received, it is necessary that the electron beam of the reproducing tube be made to traverse the area of the screen which corresponds exactly to the area being scanned at that instant at the transmitter. Exact synchronism must be maintained between the two extremities of the system, a subject which will be covered later in this discussion. In addition to this, means must be provided whereby the electron beam can be deflected to any part of the fluorescent screen. As mentioned in Part IV, the two possible methods of obtaining a deflection of the electron beam are the electrostatic and the electromagnetic methods.

Electrostatic Deflection

In the case of electrostatic deflection, the beam of electrons leaves the gun and passes between two parallel (at least considered parallel for this analysis) deflecting plates arranged horizontally. The electric field set up between these two plates causes the beam to be bent upward and downward in a vertical plane. The beam next passes between another similar pair of plates arranged at right angles to the first pair. An electric field set up between these two plates causes the beam to be deflected in a horizontal direction and by means of the composite forces acting upon the beam by the two pairs of plates, it may be deflected to any part of the fluorescent screen. These forces acting upon the beam arise, as pointed out before, from the fundamental action of charged bodies: like charges repel, and unlike charges attract. The beam, being composed of negative electrons, will be deflected toward the plate which is positive at that instant.

The amount of the deflection is given by

$$x = \frac{E_d l y}{2E_a d} \quad \ldots\ldots\ldots\ldots\ldots\ldots\ldots (1)$$

where E_d is the potential applied between the deflecting plates, E_a is the accelerating anode potential, and the other symbols are as explained in Fig. 1. Equation (1) is derived from the equation of motion of an electron travelling in the y direction, considering the charge on the electron and the mass

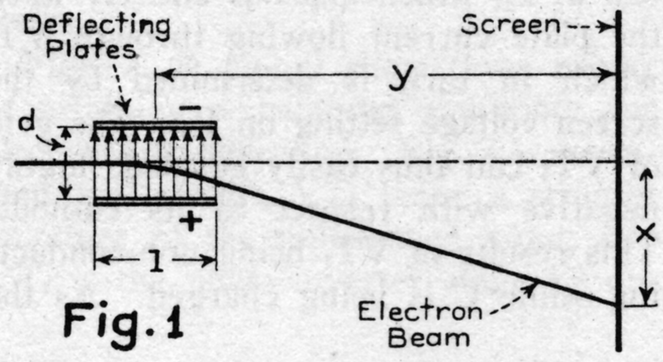

Fig. 1

Illustrating the principle of electrostatic deflection.

Showing how electromagnetic deflection is accomplished.

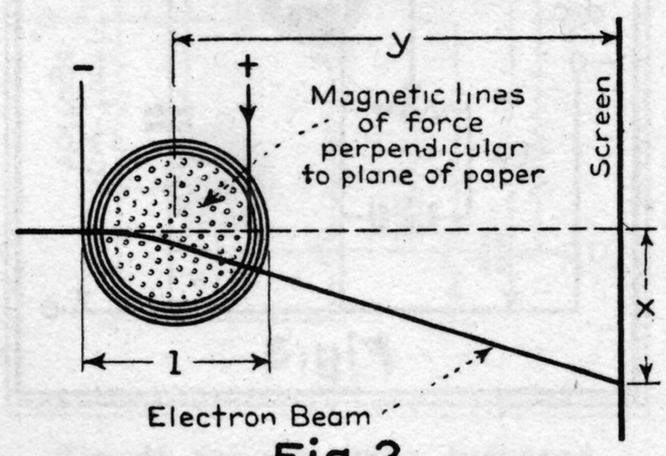

Fig. 2

of it due to its velocity. The trajectory of the electron is rectilinear before entering the electrostatic field between the deflection plates and after emerging from it, but while it is travelling between the plates, its path is curved. From the mathematical statement of equation (1) we can see that the deflection x is directly proportional to the deflecting voltage E_d, the length l of the electrotatic field traversed by the electron, and the distance from the plates to the screen. It is inversely proportional both to the deflecting plate separation and the accelerating anode potential. Of these parameters, all are fixed quantities for a given cathode-ray tube except E_d and E_a. The greater E_a, the greater the velocity of the electron travel and the less time the electrostatic field between the plates has to act on it. For this reason a "stiff" beam (one accelerated by a relatively great anode voltage) requires a relatively large deflecting voltage for a given deflection.

Electromagnetic Deflection

The electron beam can be compared to a current flow in an extremely flexible conductor. If this beam traverses a magnetic field, a force will act upon the beam tending to move it. This phenomenon is exactly the same one which causes electric motors to turn, the well-known "motor action" based upon Ampere's law. Consider an electron beam entering a perfectly uniform magnetic field whose direction is from the observer into the paper in Fig. 2. By means of the old familiar left-hand rule (remembering that electron flow is opposite to the conventional current flow), the direction of the deflection can be determined. The amount the beam is deflected is given approximately by:

$$x = \frac{0.3\,Hly}{\sqrt{E_a}} \quad \ldots\ldots\ldots\ldots\ldots\ldots (2)$$

where H is the field strength in gauss and the other symbols as explained in Fig. 2.

It should be emphasized that equations (1) and (2) are only approximate due largely to the fringing effect and the resulting non-uniformity of the electric and magnetic fields.

Sawtooth Generating Systems

In order to obtain uniform spot travel along a line and equally spaced lines over the whole raster or scanning pattern, the potentials that must be applied to the deflecting plates must be of saw-tooth waveshape. This shaped wave can most easily be produced by a circuit such as that shown in Fig. 3 in simplified form. The condenser C is charged from the d-c source at a rate determined by the resistor R. When the voltage across the condenser terminals, and thus across the gas triode VT_1, has attained a certain value which is determined by the grid voltage E_c, VT_1 will become conducting and discharge the condenser C very rapidly. Thus, we have a voltage which increases at an essentially constant rate up to the firing point of VT_1 and then rapidly decreases to zero and again begins a new cycle of ascent producing a

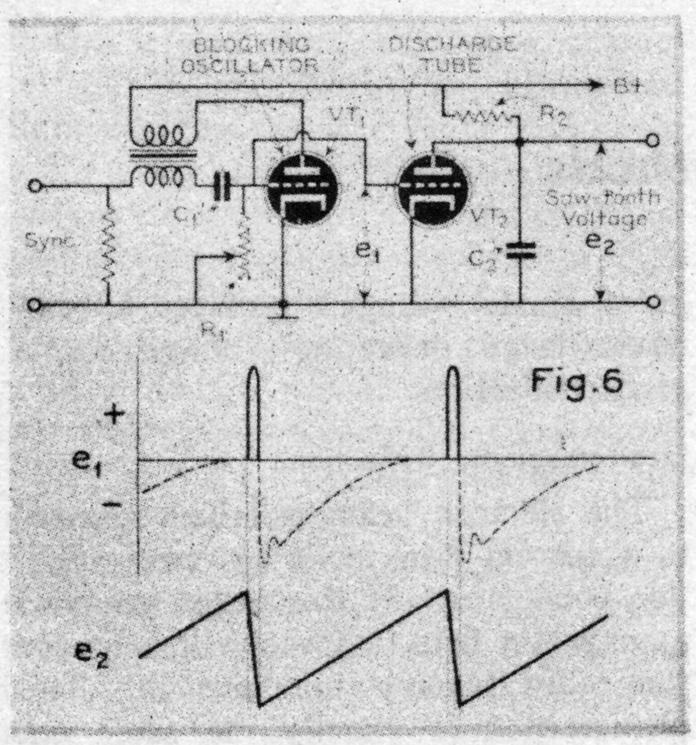

A popular type of saw-tooth generator used by RCA.

saw-tooth shaped wave. The frequency may be varied by varying R or changing the value of C, and the amplitude may be adjusted by varying E_c. To obtain an essentially linear ascent, the crest saw-tooth voltage must be only a relatively small percentage of the applied d-c voltage, because the voltage built up across C is an exponential function of time. The resistor R may be replaced by a pentode tube whose plate current is essentially independent of its plate voltage. In this way, the tube acts as a constant-current device making the saw-tooth ascent linear over a greater proportion of the applied voltage. The limitation of this saw-tooth oscillator utilizing a gas triode is that the firing point of the tube varies slightly with aging, temperature, etc., causing somewhat erratic operation, and that there is a very definite upper frequency limit due to the finite deionization time. Newer gas triodes using gases other than mercury vapor have overcome many of these disadvantages, and it is possible to use this type of saw-tooth generator for the line scan for modern high-definition pictures which is 13,230 cycles per second.

While the mercury-vapor type of gas triode only was available, its limitations caused much work to be done along the line of high-vacuum saw-tooth generators. Fig. 4 shows a circuit[1,2,3] which has proved to be very satisfactory as to stability and high-frequency operation. In fact, high-vacuum generators have been made to operate at frequencies as high as one megacycle, which gives them a distinct advantage over the gaseous type even for oscillographic uses.

In Fig 4, VT_1 is the high-vacuum triode which acts as the discharger of the condenser C and VT_2 has the duty of aiding this discharge operation. The actual discharge and charge circuit is shown with heavy lines to facilitate an understanding of the circuit. Let us follow a cycle of operation through, starting with the condenser C discharged. At the moment the 300-400 volts d-c are switched on, the full voltage appears across R causing the cathode of VT_1 to be highly positive with respect to ground. The grid of VT_1 assumes the potential of the lower end of R_2 which depends entirely upon the plate current flowing through VT_2 which in turn is determined by the screen voltage setting on R_3. The grid of VT_1 can thus easily be made highly negative with respect to its cathode. This results in VT_1 being non-conducting while C is being charged. As the

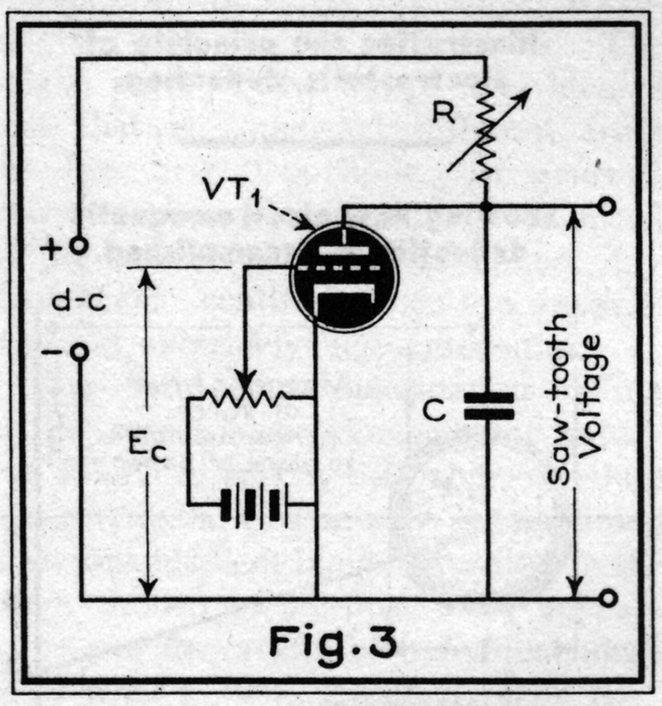

A simplified circuit for producing saw-tooth voltage.

voltage across the terminals of C increases, the plate voltage of VT_1 ultimately attains a value which causes VT_1 to become conducting in spite of its high negative bias. As the plate current of VT_1 flows through R_1, voltage drop appears which is coupled to the grid of VT_2 through the C_1-R_6 circuit driving it in a negative direction which in turn decreases the voltage drop on R_2. The grid of VT_1 thus becomes less negative allowing more and more plate current to pass. The grid of VT_1 goes positive, and the condenser C is discharged very quickly through VT_1. When the voltage across C decreases enough, the VT_1 grid again gains control and the cycle repeats. The resistor R_1 controls the discharge time which is aided by the gain of VT_2. Resistor R_2 controls the amplitude of the sweep. A pentode can be used as a constant-current device in place of R if the refinement is justified. Synchronization can be obtained by injecting the pulse on the suppressor grid of VT_2 or replacing R_3 by a triode with adjustable cathode resistor and injecting the pulse on the grid of this tube. The values of components for 10,000-cycle operation as suggested by Parr[3] are included in Fig. 4.

A simpler single-tube circuit of the blocking oscillator type is shown in Fig. 5[3]. The condenser C is charged in the usual way from a d-c source either through a resistor R or a pentode tube. The discharge tube is connected across C, the primary of a transformer being in the plate circuit and the secondary in the grid circuit and the two windings closely coupled. The tube is biased beyond cutoff by R_3 which is by-passed by C_2 to provide a smooth bias voltage for the tube. The method of action is as follows: the grid is biased beyond cutoff and the condenser charges until the plate voltage is great enough to allow current to pass through the tube even with the high bias. The plate current flowing through the primary of the transformer induces a voltage on the grid which bucks the bias from R_3. This process rapidly continues, until the condenser is discharged and the cycle repeats. The resistor R_2 is connected across one of the windings of the transformer and adjusted so that the tube will not oscillate continuously but will produce essentially a single pulse of current. Synchronization may be realized by inserting the pulses into a third winding. The resistor R_3 controls the amplitude, and R the frequency of the saw-tooth. Typical values of constants suggested by Parr[3] are included in Fig. 5.

There are several other types of saw-tooth generators but none as much in use in this country as that used by RCA as illustrated in Fig. 6.[5,6,7] Here

Circuit for obtaining balanced saw-tooth for electrostatic deflection.

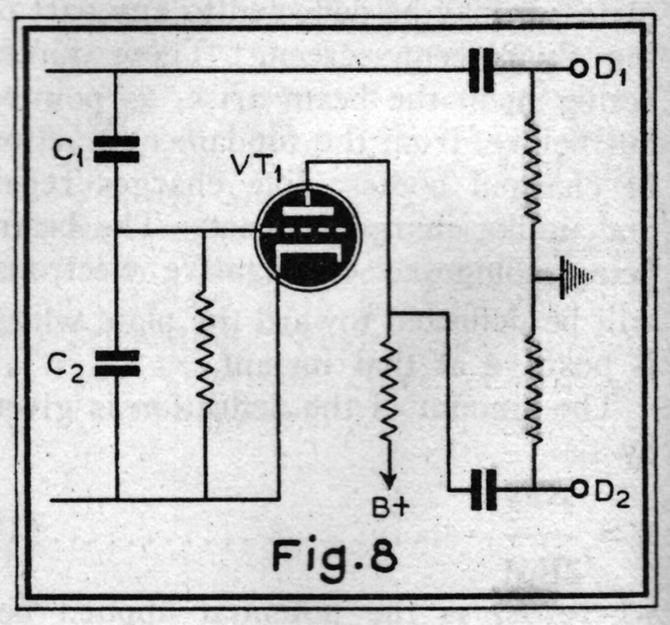

again the ascent of the saw-tooth wave is obtained by charging the condenser C_2 through the resistor R_2 from a d-c source. The tube VT_2 is normally biased beyond cutoff so that it does not influence the charging cycle. However, at certain intervals determined by the selection of constants and the synchronizing signal, the blocking oscillator incorporating VT_1 delivers a large positive pulse to the grid of VT_2, causing it to have a very low impedance and discharging the condenser C_2 after which a new cycle begins. The waveshape of e_1 is shown in Fig. 6, the broken portion in the negative region serving only to drive VT_2 farther beyond cutoff. The solid positive pulses, however, are the ones causing VT_2 to discharge C_2. The phase relationships between the discharge pulses of e_1 and the output saw-tooth wave e_2 is as shown in Fig. 6.

Electrostatic Deflection

It has been pointed out that in charging a condenser through a resistor (the case in many of the saw-tooth generators described), the condenser can be charged only to a small percentage of the + B voltage if linearity is to be obtained. There are two ways to get around this limitation, one to use a pentode in place of the charging resistor and the other is to amplify the relatively low saw-tooth generated with the charging resistor. In either case, more component parts are required.

One thing that must be met in electrostatic deflection is the distortion arising when the saw-tooth voltage is applied to the plates asymmetrically, or unbalanced to ground. Many of the small oscillograph cathode-ray tubes have one horizontal and one vertical plate bonded within the tube, but the larger tubes, especially those in television service, always have separate contacts for all deflecting plates. The two types of distortion arising when the deflection voltages are asymmetric are: (1) a variation of sensitivity produced by the deflection voltage which adds or subtracts from the accelerating anode voltage, and (2) an inter-modulation of the two pairs of plates. Both forms of distortion are avoided if balanced deflecting voltages are used. The effect of these distortions is the degeneration of the normal rectangular raster to one of trapezoidal shape. To avoid this, a push-pull amplifier stage should be used to apply the deflecting voltage to the plates.

Figs. 7, 8, and 9 show three means of attaining a balanced saw-tooth for electrostatic deflection. Fig. 7 is a conventional circuit, VT_1 being a straight amplifier of the unbalanced input, and VT_2 is the phase-inverter stage by obtaining its driving voltage from the plate circuit of VT_2. For line scan, the fundamental frequency is 13,230 cycles for RMA standards and to transmit faithfully 10 harmonics, the design of the circuit must be carefully considered.[8]

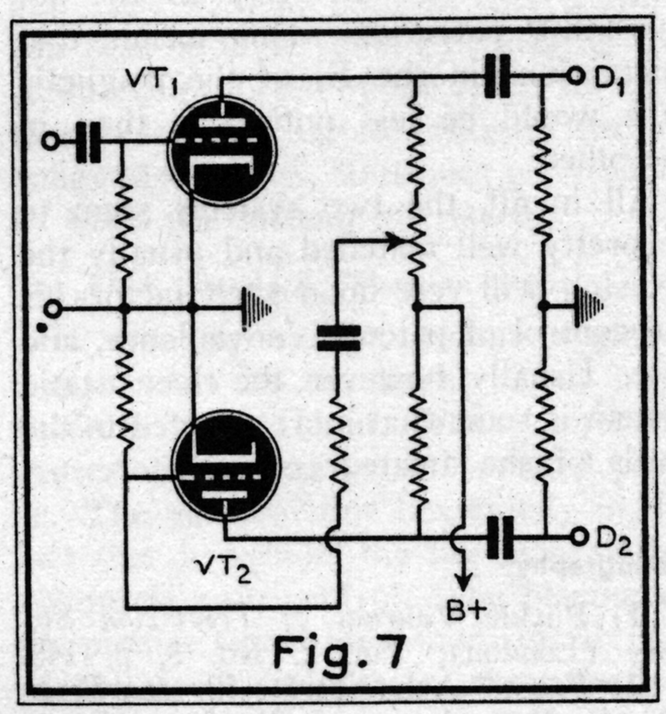

Circuit for attaining balanced saw-tooth for electrostatic deflection.

Fig. 8[9] uses the voltage directly from the saw-tooth generating condenser C_1 to apply to one deflecting plate D_1. The other voltage in correct phase relationship is obtained from a stage whose excitation is derived from a small condenser C_2 inserted in series with the main condenser C_1. As a 180° phase relationship exists between the grid and plate circuit of VT_1, the plate D_2 will receive a faithfully balanced voltage if the circuit is properly designed. C_2 is so proportioned that a voltage is delivered to the VT_1 grid which is the voltage appearing across C_1 divided by the actual gain of VT_1.

A saw-tooth circuit for electrostatic deflection.

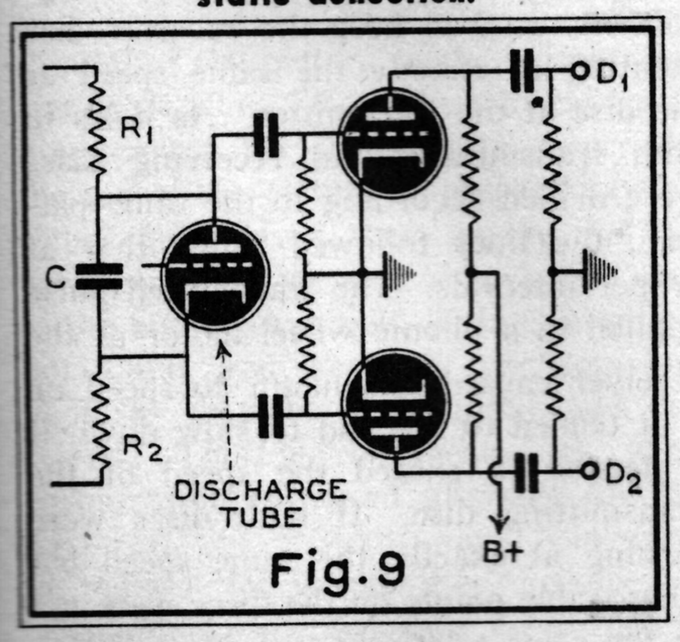

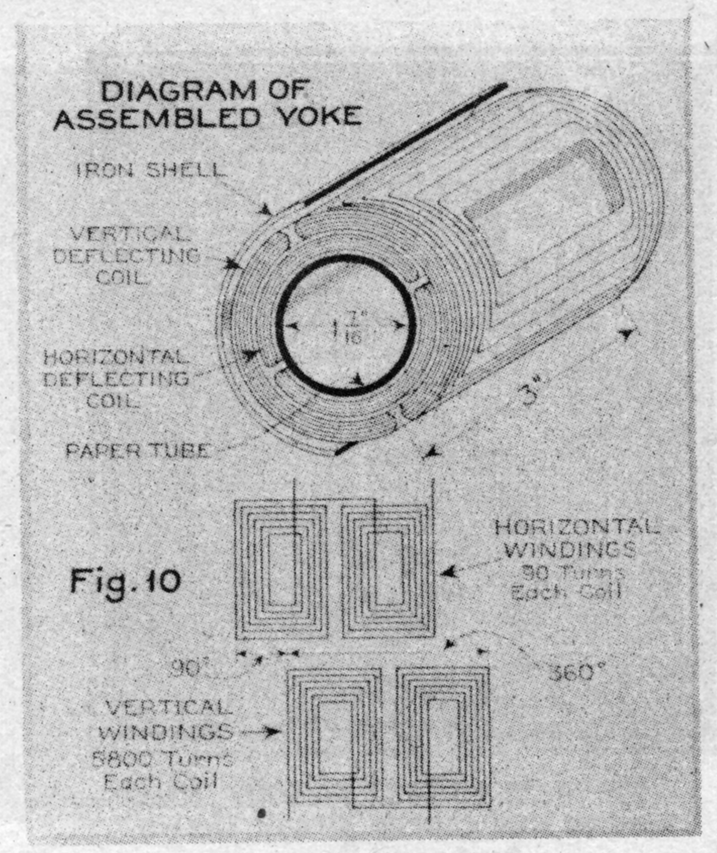

An assembly of horizontal and vertical deflecting coils are used in RCA receivers.

Fig. 9[9] shows a circuit which is inherently balanced to ground. This is accomplished by dividing the charging resistor into two equal parts, R_1 and R_2, and placing one on either side of the saw-tooth generating condenser. To vary the charging rate (and thus the frequency) either R_1 or R_2 may be made adjustable within small limits without seriously disturbing the balanced conditions.

Electromagnetic Deflection

To obtain the same effect on an electron beam magnetically as the saw-tooth voltage applied to a pair of plates does electrostatically, a saw-tooth of current must be driven through some deflecting coils mounted on the neck of the cathode-ray tube. Such an assembly including both the horizontal and vertical pairs of coils is shown in Fig. 10 as used in RCA receivers.

Usually a saw-tooth of voltage is generated by one of the methods described and used to drive an amplifier which delivers sufficient current to deflect the beam. If the resistance of the deflecting coil circuit is great compared to the inductive reactance of the coil, no difficulties will be encountered. Such a situation exists in the horizontal deflecting circuit. However, in the vertical magnetic deflection system, the inductance of the coils cannot be neglected, and the saw-tooth voltage applied to the grid of the output tube must be adjusted so that a saw-tooth of current actually results. This is accomplished by inserting a pulse during the discharge part of the original saw-

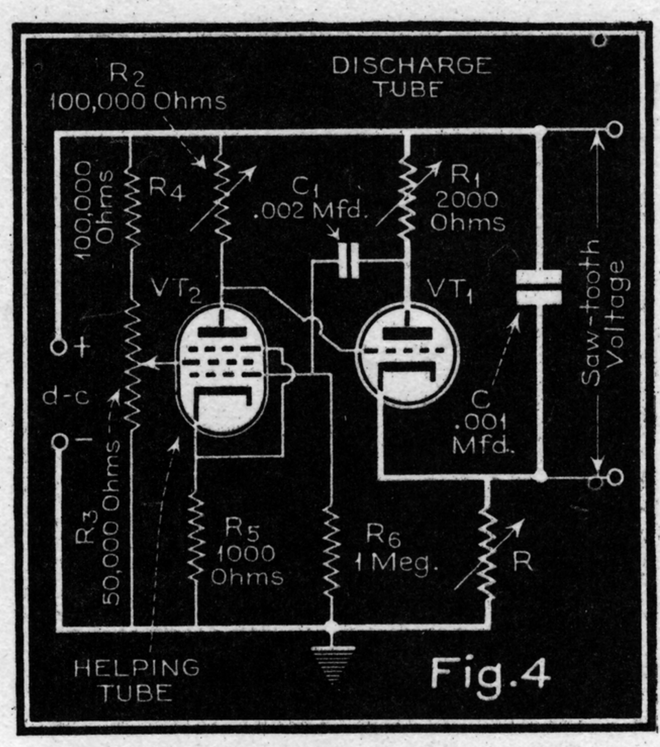

Saw-tooth voltage circuit. Discharge and charge circuit shown by heavy lines.

tooth forcing the current to decay within its allotted time[5].

As the current suddenly changes during the flyback part of the saw-tooth wave, a high-voltage transient condition is induced which limits the number of turns that can be used on the deflection coils[6]. The television receivers using magnetic deflection usually employ a diode across the primary of the horizontal output amplifier which damps out this condition.

Electrostatic vs. Electromagnetic Deflection

In the final analysis in the commercial field, the deflection system which is the most economical should be used. A few of the factors entering into this will be brought up.

Magnetic deflection is accomplished by lower voltage circuits than electrostatic deflection which would tend to make the cost of the component parts less for the magnetic system.

As far as distortions are concerned, it might be mentioned that there is a great possibility of cross-modulation between the two magnetic fields as well as between the two sets of deflecting plates, and it is believed that proper design in either case minimizes this factor.

Great care must be exercised in the construction of the electrostatic type of tube as to the alignment of the plates. The construction of the magnetic tube is inherently simpler and cheaper, and any skew in the deflecting system can be adjusted at will.

As pointed out in equations (1) and (2), the sensitivity of the magnetic tube varies inversely as the square root of the accelerating potential and in the electrostatic tube inversely as the accelerating potential. This means that fluctuations in the E_a of the magnetic tube would be less noticeable than in the other.

All in all, the two systems seem to be pretty well matched and usually the decision will rest upon such factors as the control of patents, convenience, and cost. Usually, however, the electrostatic system is somewhat more adapted to the needs of the amateur constructor.

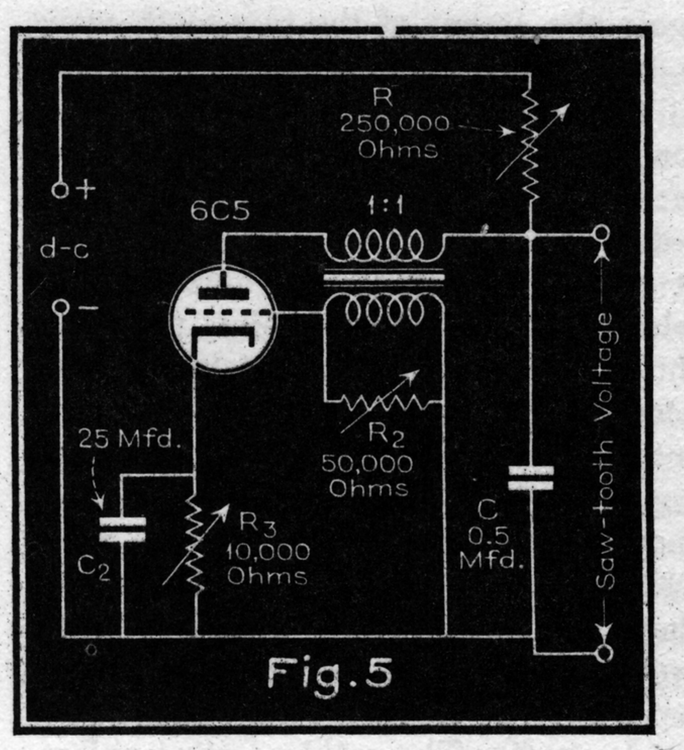

A simple one-tube circuit of the blocking oscillator type.

Bibliography

(1) Puckle, *Journal of Television Society* (London), Vol. 2, No. 5, p. 145.

(2) Faust," Ablenkgeräte für das Fernsehen," *Fernsehen und Tonfilm* (*Funktechnische Monatshefte Beilage*) I—Oktober, 1938, Heft 10; II—November, 1938, Heft 11.

(3) Parr, "Hard Valve Scanning Circuits," *Television* (London) (I) August, 1938, p. 475, and (II) September, 1938, p. 541.

(4) Maloff, "Cathode-Ray Tube in Television Reception," delivered before Radio Club of America, Sept. 18, 1935; *Television,* Vol. I, (RCA Inst. Tech. Press), pages 337-354.

(5) Engstrom and Holmes, Television Deflections Circuits," *Electronics,* January, 1939, page 19.

(6) Somers, "Scanning in Television Receivers," *Electronics,* October, 1937, page 18.

(7) Holmes, Carlson, and Tolson, "Experimental Television System," *Proc. IRE,* Vol. 22, No. 11. Nov. 1934, page 1266.

(8) Everest, "Practical Aspects of Wideband Television Amplifier Design," COMMUNICATIONS, March, 1939, p. 21.

(9) Parr, "Symmetrical Deflection," *Television* (London), February, 1936, page 91.

Part VI: *Synchronization*

SYNCHRONIZATION is that function of the television system by which the transmitting and receiving ends of the system are held together in proper time relationship. The results would be nothing short of chaos if the light-valve signals representing the different elemental areas of the transmitted image were reassembled at the receiver in any other than their proper relationship. Whether or not visual intelligence is successfully transmitted depends upon absolute synchronism between the transmitter and the receiver. A television receiver might be reproducing every elemental area of the transmitted image upon its screen, but unless they were properly oriented the result would be a meaningless jumble of light and shade.

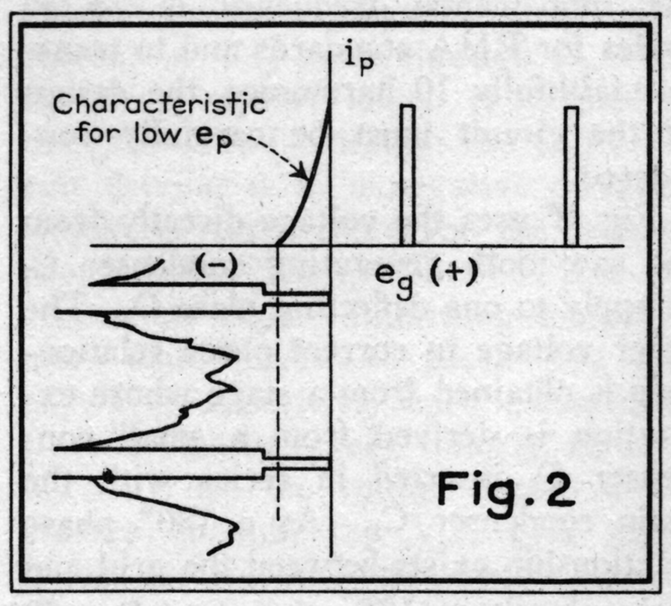

Fig. 2. Operation of 1st synch separator circuit which separates vertical and horizontal synch pulses from picture. Fig. 1. RMA Standard T-111 television signal.

In the early days of television when the scanning disc or similar mechanical systems were used, only one synchronizing signal was necessary. That signal was used to keep the receiver disc rotating at exactly the same speed as the disc at the transmitter. As holes in both transmitting and receiving discs were drilled according to the same pattern, the lines followed each other at proper intervals. The transmitted pulse applied to a phonic wheel motor at the receiver caused this motor to speed up if it tended to lag and to slow down if it tended to exceed the speed of the transmitting disc. If both discs were turning at exactly the same speed but comparable points on the discs were not in the same relative positions an *isoch-*

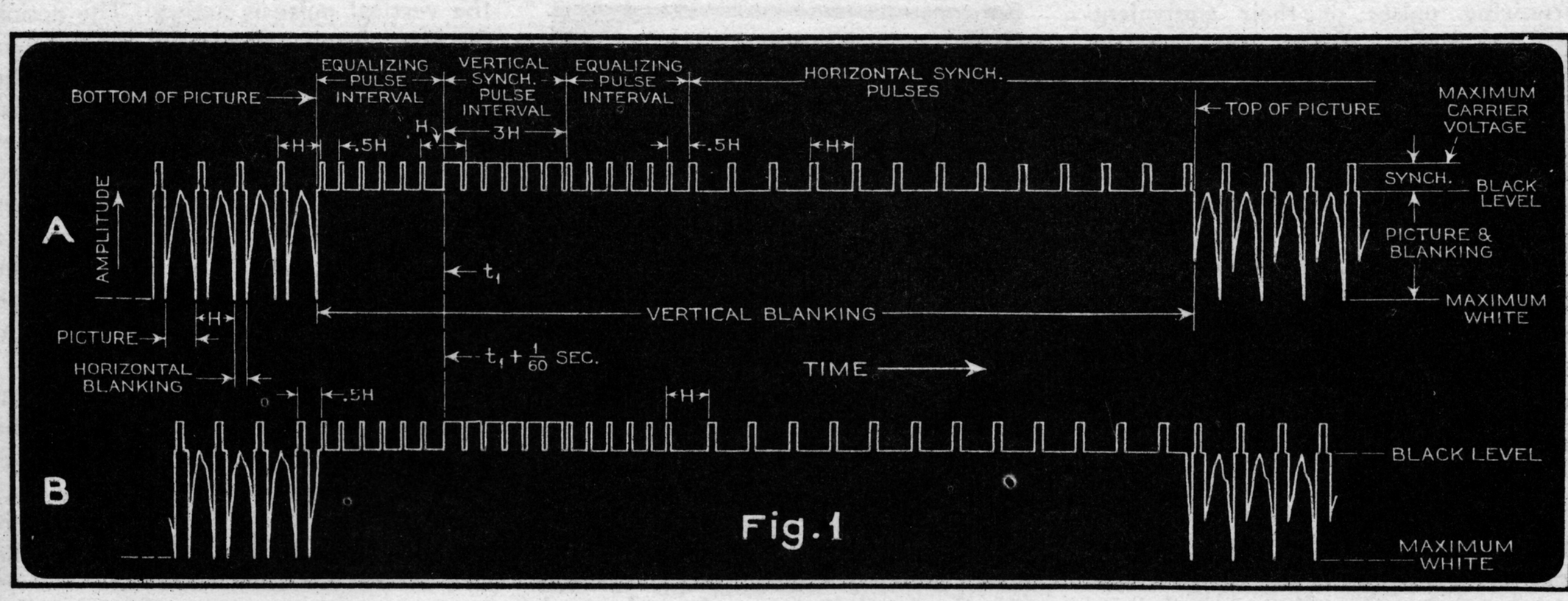

Fig. 1

ronous condition existed. If, in addition to identical speeds, comparable points on the two discs were made to rotate so that they always were in the same relative position with respect to the other they would be *in phase* and *synchronous*. The latter condition is the one that must exist in television systems.

In cathode-ray reproducing systems the image is synthesized by means of constant-speed unidirectional scanning. As discussed in Part V, the scanning potentials or currents are generated locally in the television receiver. For synchronous operation of this type of system, it is necessary that two synchronizing signals be transmitted, one to initiate each line sweep, and one to initiate each field. Interlacing may be accomplished by having an odd relationship between the line and field scanning frequencies.

After the scanning spot has traversed from left to right at a constant speed along a single line, it must return to the left edge of the picture again. The time required for this, called the "fly-back" period, is wasted as far as the image is concerned. The fly-back time is 15% of the total time allotted to one line in the RMA standards. After the scanning spot has traveled line after line from the top of the picture to the bottom, the standards allow 7% of the vertical scanning period for the spot to return to the top of the picture in preparation for a new field. Here, then, during the flyback period at the end of each line and at the end of each field is time in which horizontal and vertical synchronizing impulses may be transmitted and received. This is the means of synchronization now used, although the details of the systems vary somewhat throughout the world. For instance, in Germany the method used recently was removing the carrier completely for a short interval during the flyback period, the dead space actuating certain circuits and serving as the synchronizing signal. The method used in this country can best be understood by studying the standards proposed by the RMA for uniform television signal make-up for an image of 441 lines, 30 frames per second, 60 fields per second, interlaced.

The RMA Standard Television Signal

It was decided to adopt negative transmission as the norm. That is, a decrease in initial light intensity causes an increase in the radiated power. The value of this lies chiefly in the fact that it permits the use of a simple automatic gain control. The placing of the picture signal on a more linear part of the grid modulation characteristic probably also entered into this choice.

It was further decided that if the peak amplitude of the radio-frequency television signal were taken as 100%, that not less than 20% nor more than 25% of the total amplitude was to be set aside for synchronizing purposes. In other words 0% modulation corresponds to extreme white, 75 to 80% is full black, and the region between 75-80% to 100% is devoted exclusively to synchronizing pulses. This appears to be a rather large proportion of the modulating capability of the television transmitter to devote to synchronization, but experience has proved that it is desirable to maintain good synchronization even down to the point where the picture signal becomes too weak for a satisfactory image.

Fig. 1 shows the standard synchronizing signal advocated in standard T-111 of the RMA report. This figure shows the idealized waveform of blanking and synchronizing signals in the vicinity of two successive vertical blanking pulses. The last few lines at the bottom of the picture are shown at the left, and the first few lines at the top of the picture are shown at the right. The location of the corresponding lines at the bottom or top of the picture of A and B lie adjacent to each other due to the interlacing. It will be noticed that during the flyback time at the end of a frame that "black level" is transmitted which means that the electron beam of the receiving cathode-ray tube is biased to cutoff. This prevents the beam from tracing a spurious path over the screen on its rapid flyback to begin a new field. In a similar manner, blanking pulses are inserted at the end of each line, driving the c-r grid to cutoff, while the beam is being swept back to the left of the picture to begin a new line.

The time elements involved in the horizontal blanking pulses are quite small. The time for a single line for 441-line definition is about 75.5 microseconds. This allows but 15% of this or 11.3 miscroseconds for the horizontal blanking pulse. On the other hand, the vertical blanking signal lasts for 7 to 10% of 1/60 second or from 0.0011 to 0.0016 second, about 125 times as long as the horizontal blanking pulse.

During the horizontal blanking period, the horizontal synchronizing signal is sent by modulating the transmitter into the "blacker than black" region (or from 75-80% to 100% modulation.) This signal is separated in a manner soon to be described and used to trip the horizontal sweep generator in order that the beam sweep be initiated at exactly the proper moment. Now if one of these line synchronizing impulses occurs every 75.5 microsecond, it is obvious that during the vertical blanking period these signals must be continued or control of the line frequency sweep generator would be lost. For this reason, the horizontal syn-

chronizing pulses or their equivalent are transmitted during the vertical blanking period as shown in Fig. 1.

The vertical synchronizing pulses are composed of a pulse driven to the 100% modulation level which is "serrated" or notched as shown in Fig. 1 in such a way that the horizontal pulses may continue while the vertical pulse is in existence. The greater area under the vertical pulse is a sufficient difference to allow its separation from the others.

Pulse Separation

The signal voltage (looking very much like Fig. 1 in shape) which is developed across the second detector diode load resistor of the image channel is applied to the pulse separator circuit as shown in Fig. 2. This circuit is a triode having grid-leak bias and low plate voltage so that the operating point bears approximately the relationship to the dynamic characteristic as shown in Fig. 2. The image signal and the blanking pulses have no effect in the plate circuit for they are beyond cutoff. The vertical and horizontal pulses, however, are passed, separating them from the picture signal.

Fig. 3 shows this first synch separator tube in conjunction with associated circuits. It also inverts the phase of the signal so that an amplifier stage is needed to rotate the phase another 180 degrees so that the polarity is the same as that on the input of the first tube. This synch amplifier utilizes a normal plate potential and is self-biased so that the grid is not driven to cutoff.

The output of the synch amplifier is applied to the second synch separator

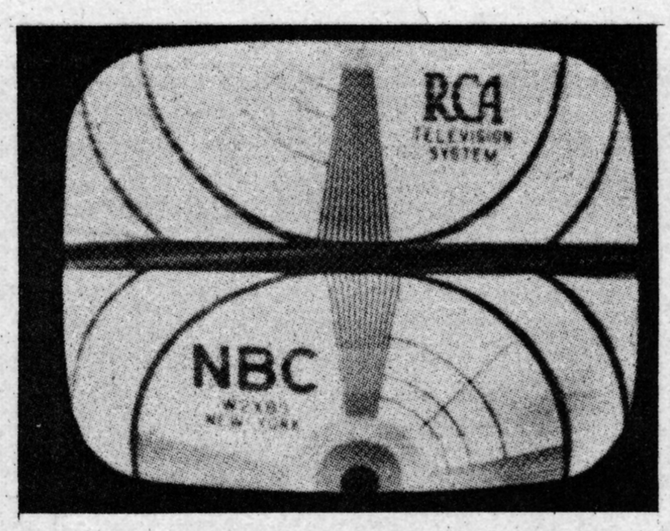

Fig. 7. Showing "loose frame hold," i.e., a lack of synchronization at frame frequency.

which serves to clip the top of the pulses and to remove any remaining picture signal that may have been allowed to pass. The series grid resistor cuts the top from any signal which drives the grid into the positive region. This tube is also grid-leak biased. With the voltages indicated in Fig. 3, the tube has a dynatron characteristic which aids in cleaning up the pulses. Any noise which may have become superimposed upon the pulses will also be removed.

The output of the second synch separator passes to two amplifier tubes. The horizontal synchronizing pulses are selected in the plate circuit of one tube and sent to the horizontal sweep oscillator to keep it in step. The vertical synchronizing pulses are selected in the plate circuit of the other tube and are then used for controlling the operation of the vertical sweep oscillator.

Fig. 4 shows the waveforms and the basic pulse selecting circuit used in the plate circuit of the horizontal amplifier of Fig. 3. The function of this circuit is to provide a continuous flow of horizontal synchronizing pulses even while the vertical pulse is acting. The action of this circuit during this particular critical time is shown in Fig. 4. The serrations or notches in the vertical pulse allow a continuation of the pulses in the output of this circuit composed of C and R. The condenser C allows current to pass only while the voltage is changing. The front edges of the pulses produce positive impulses which are used to synchronize the horizontal sweep generator.

Both the vertical and horizontal pulses are applied to the grid of the vertical amplifier and the vertical pulses are separated by a mechanism such as shown in Fig. 5. The condenser C′ is charged through the resistor R′. The

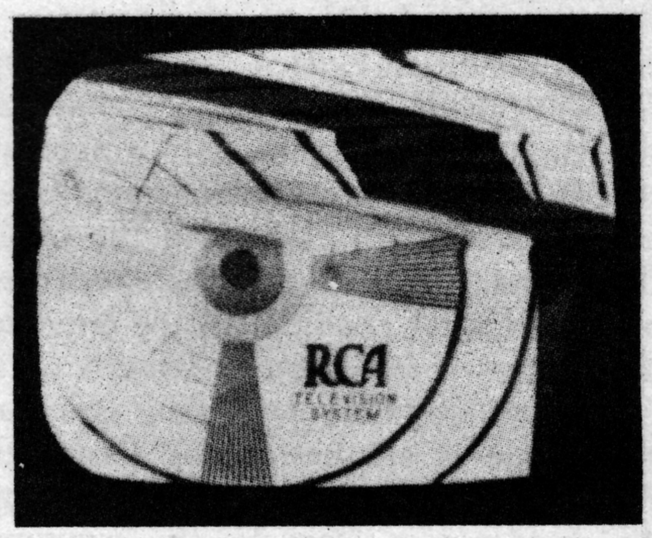

Fig. 8. Showing "loose live hold" or insufficient horizontal synchronization.

area represented by the horizontal pulses is so small that C′ is charged to only a relatively small voltage. However, the serrated vertical pulse charges C′ to a voltage which is sufficient to trip the vertical sweep oscillator and keep it in step. The circuit of Fig. 5

Simplified typical synch separator and amplifier circuits of television receiver.

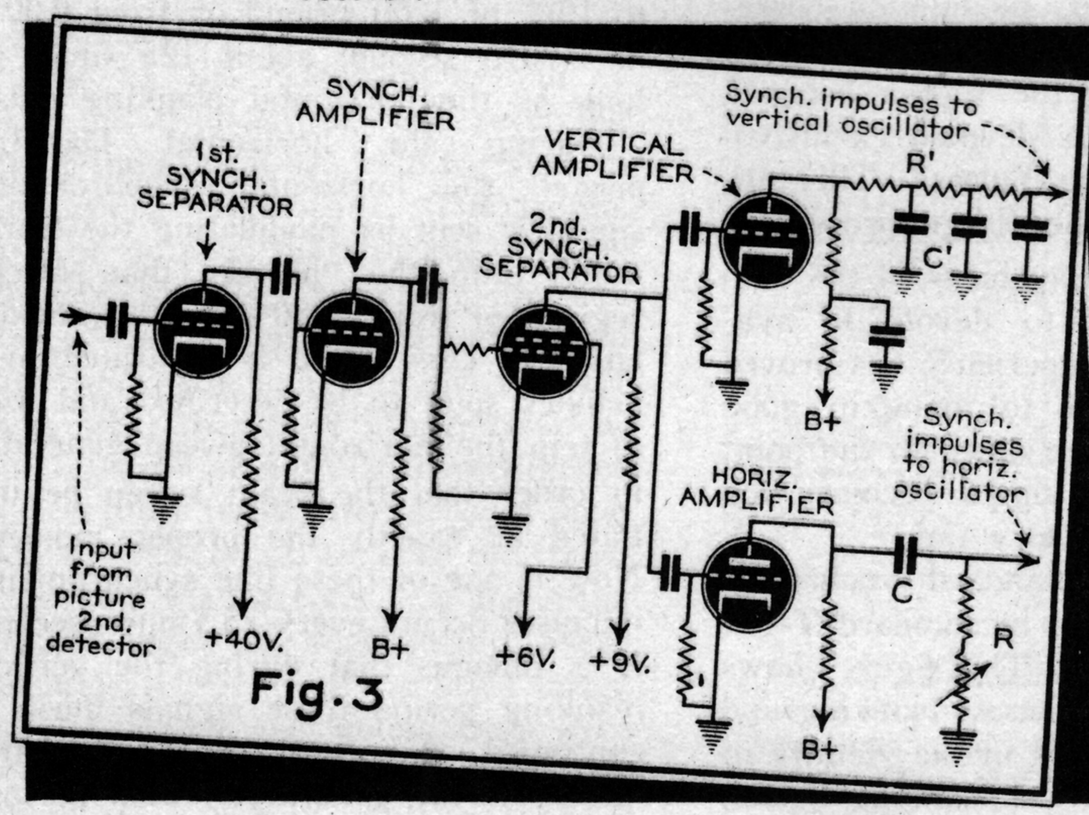

Fig. 3

A possible master timing system for horizontal and vertical synch pulses.

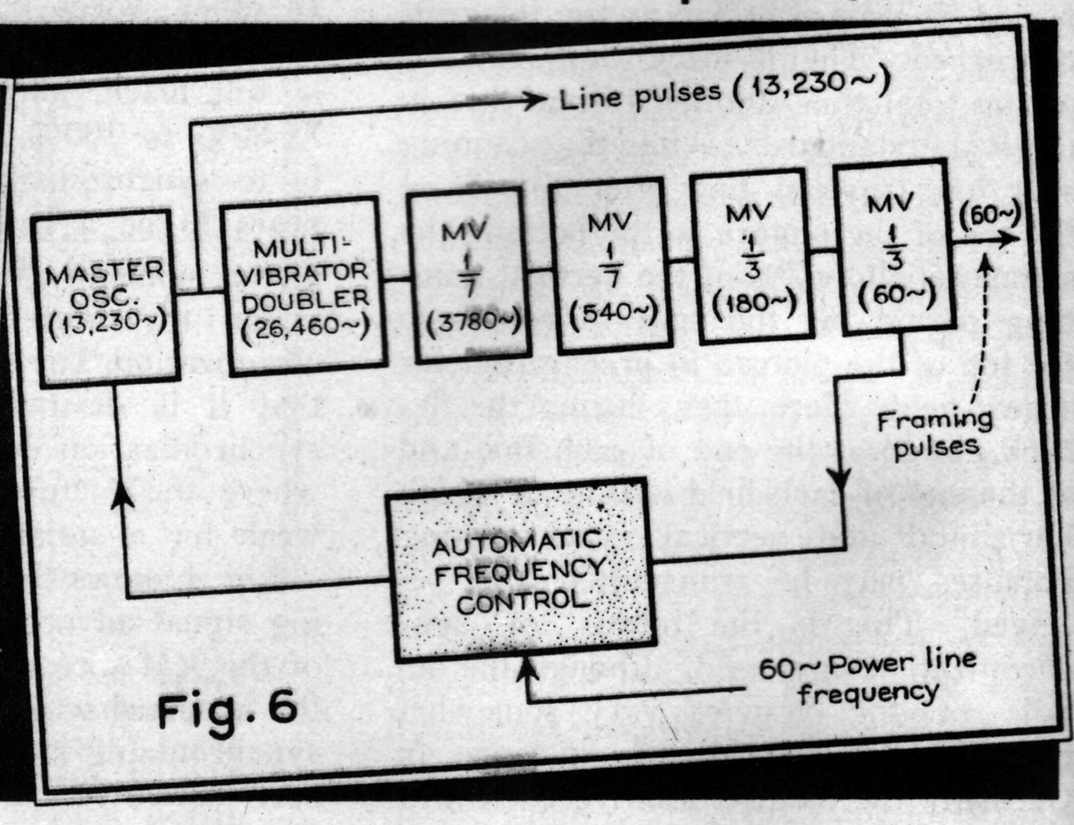

Fig. 6

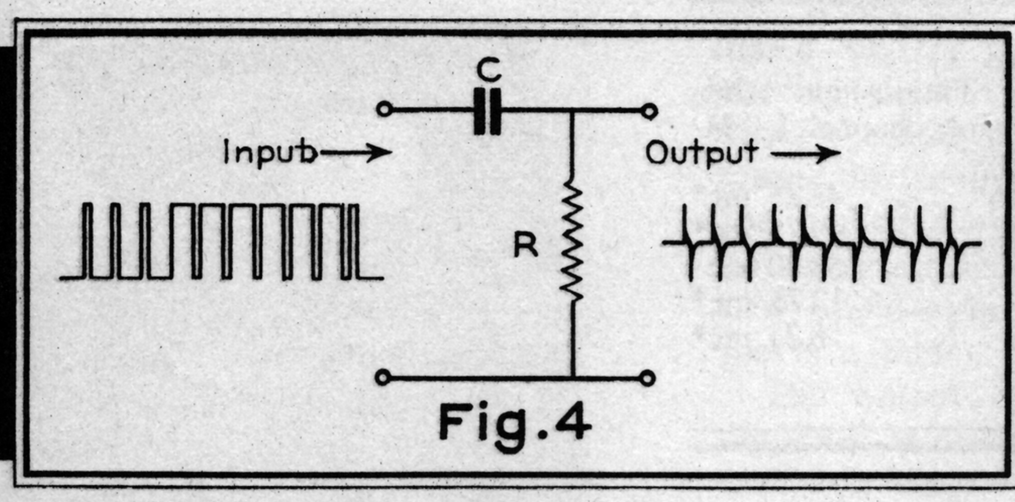

Showing the action of the basic horizontal pulse selecting circuit.

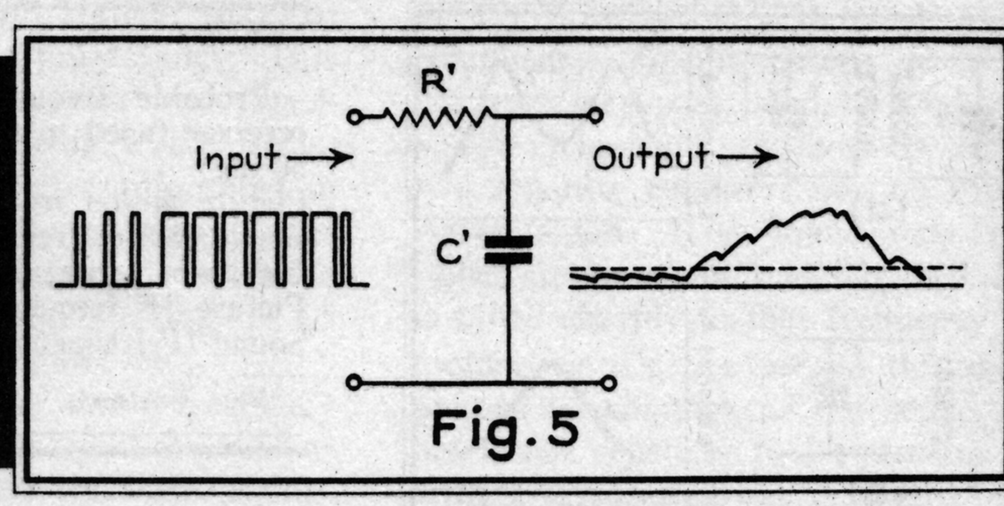

Showing action of the basic vertical pulse selecting circuit.

is actually a simplified version of three filter sections in cascade as shown in the plate circuit of the vertical amplifier of Fig. 3.

Pulse Generation

A glance at the complex waveform of Fig. 1 impresses one with the close tolerances which must be observed for satisfactory television operation. It is both interesting and instructive to understand a method of keeping the proper relationship between line and field-pulses. It is also highly desirable that the 60-cycle output of the vertical sweep generator be locked into step with the 60-cycle power frequency. This results from the disturbing effects of a-c hum in the vertical or horizontal deflection circuits or both. The disturbance created is much more disconcerting to the eye if it is in motion as would be the case if a slight difference existed between the field and power frequencies. Wiggling and creeping edges and vertically moving horizontal bands due to uneven line spacing result at the difference frequency. To avoid this, relatively complex systems are used. Fig. 6 shows one such possible system. A master oscillator of some type controllable over a narrow range operates at 13,230 cycles per second which is the line frequency ($441 \times 30 = 13{,}230$). This frequency may be used to control the frequency of the horizontal synchronizing pulses. This is fed into a multivibrator circuit which doubles the frequency and into four successive multivibrator stages which act as frequency dividers of 1/7, 1/7, 1/3, and 1/3, respectively. The output frequency is 60 cycles. To keep this output frequency the same as the power-line frequency, it can be compared to the power frequency by means of a suitable electrical circuit, and the frequency of the master oscillator adjusted to compensate for any difference between the two frequencies.

Bibliography

(1) Murray, "Television Standards," COMMUNICATIONS, December, 1938, p. 14.
(2) Murray, "RMA Completes Television Standards," *Electronics*, July, 1938, p. 28.
(3) Goldsmith, "Television Economics," Part III, Section E-3, "Synchronizing and Video Controls," COMMUNICATIONS, April, 1938, p. 26.
(4) Engstrom and Holmes, "Television Synchronization," *Electronics*, November, 1938, p. 18.
(5) Zaharis, "Synch Impulse Generator for Television Deflection Circuits," *Electronics*, June, 1939, p. 48.
(6) "Practical Television by RCA," Service Division, RCA Manufacturing Company, Inc.

Part VII: *Television Receivers*

As far as the basic principles of operation are concerned, the television receiver does not differ from the usual broadcast sound receiver. The television receiver does differ greatly in several details, however. The carrier frequencies are much higher for the television receiver (44 to 108 megacycles for seven channels) which alone demands many refinements for satisfactory operation. The television receiver must receive and care for two carriers simultaneously, one for sight and one for sound. The sound channel must be very wide (about 2 to 4 megacycles)

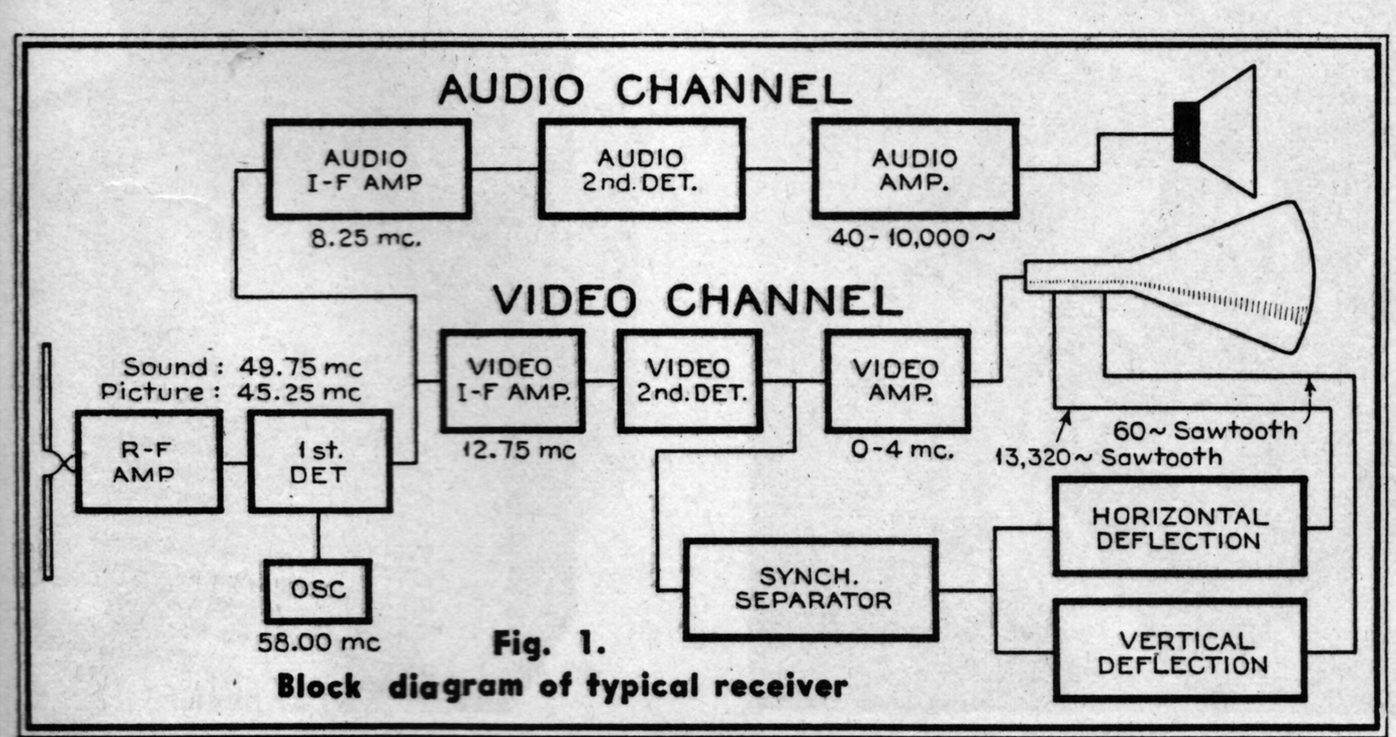

Fig. 1. Block diagram of typical receiver

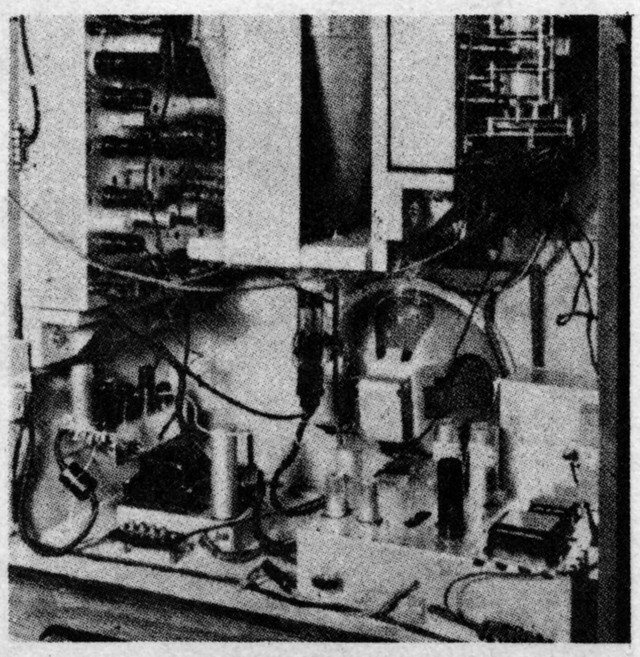

Fig. 6. Rear view of large RCA receiver.

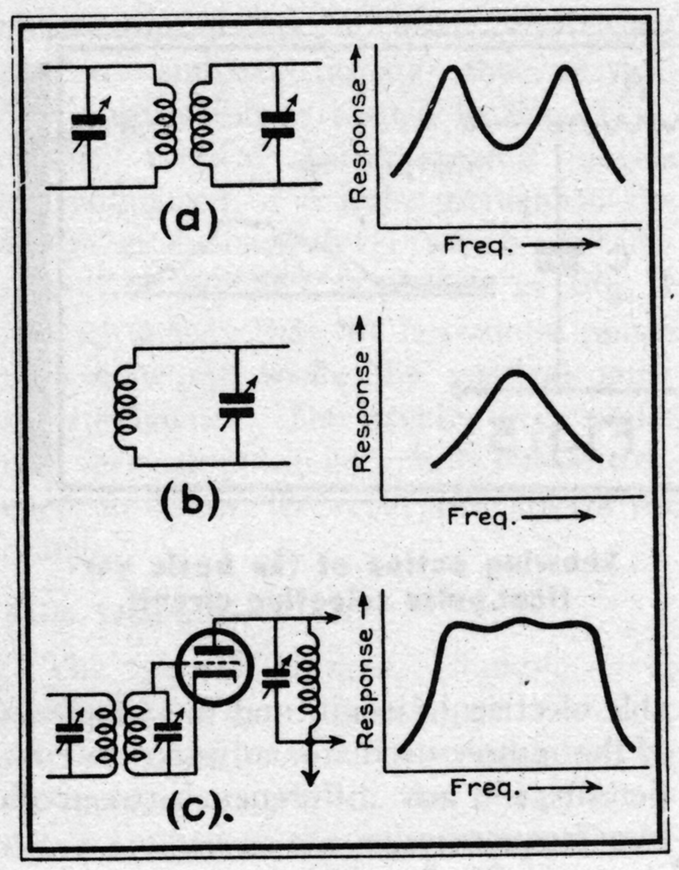

Fig. 2. Various response characteristics.

to pass the high-frequency components of the normal video signal. The existence of this wide pass band introduces problems concerning noise. Although this ultra-high-frequency region is practically immune from natural static, it is particularly vulnerable from man-made interference such as that generated by automobile ignition systems, street cars, diathermy machines, various domestic appliances, etc. The interference generated by many of these devices is of a random character having its energy distributed more or less evenly throughout the spectrum. The

TABLE I

Probable frequency relationships when receiver tuned to television channel I (44-50 mc)

Picture carrier frequency.....	45.25 mc*
Sound carrier frequency	49.75 mc*
Oscillator frequency	58.00 mc
Picture IF frequency	12.75 mc*
Sound IF frequency	8.25 mc*

*Plus sidebands.

gain of the video channel is thereby somewhat limited due to the wide pass band and the resulting greater noise level. This means that the sensitivity of the television receiver is less than the ordinary broadcast receiver. The necessity for wide video pass bands results in the realizing of only a relatively low gain per stage, more or less offsetting the lower sensitivity advantage economically.

The superheterodyne receiver has been almost universally adopted for television receivers. The tuned-radio-frequency receiver can be used, but economic considerations rule largely against it. Serious variations of sensitivity and pass-band width throughout the tuning range are also detrimental.

Fig. 1 shows a highly simplified block diagram of a typical television receiver for both sight and sound. The degree of simplification of Fig. 1 can be realized by counting the number of tubes in the television receivers now on the market in this country. The number varies from 16 tubes for a 5-inch receiver designed to use the audio

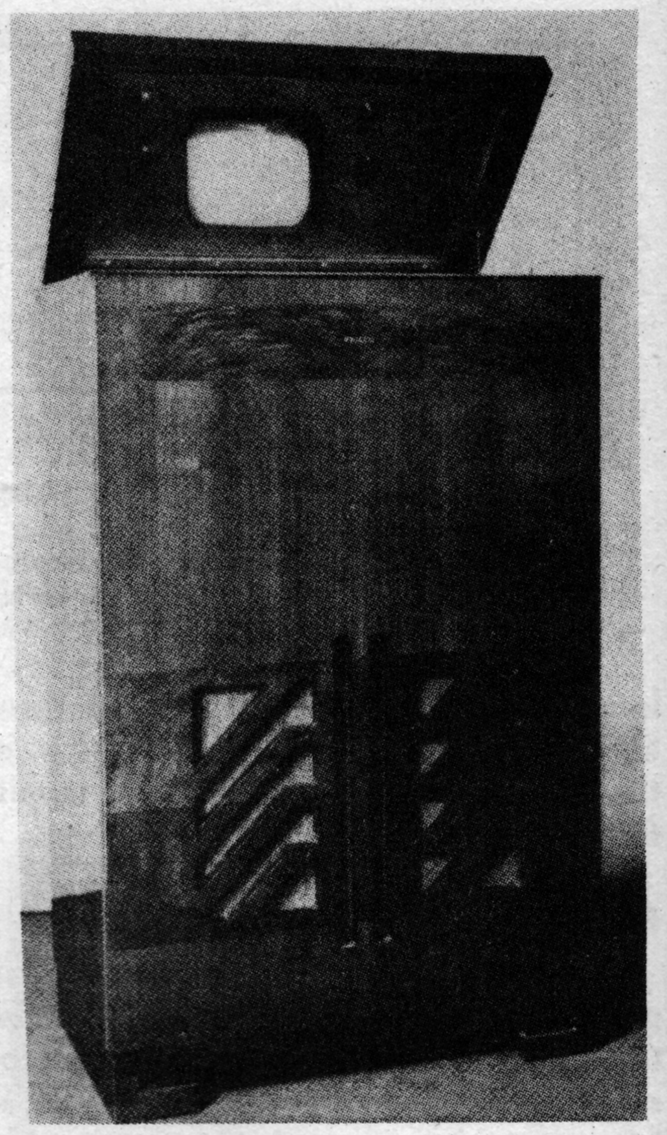

Fig. 3. Front view of Philco receiver.

power amplifier of a usual broadcast receiver to 32 tubes in a receiver having a 12-inch cathode-ray tube which is complete plus an all-wave receiver. The usual sight and sound receiver complete utilizes about 25 vacuum tubes. Future development and research will undoubtedly lead to simplification.

The radio-frequency amplifier, if one is included, amplifies both the video carrier and its side-bands and the audio carrier and its side-bands at the same

Below: Fig. 8. Checking frequency response in RCA plant.

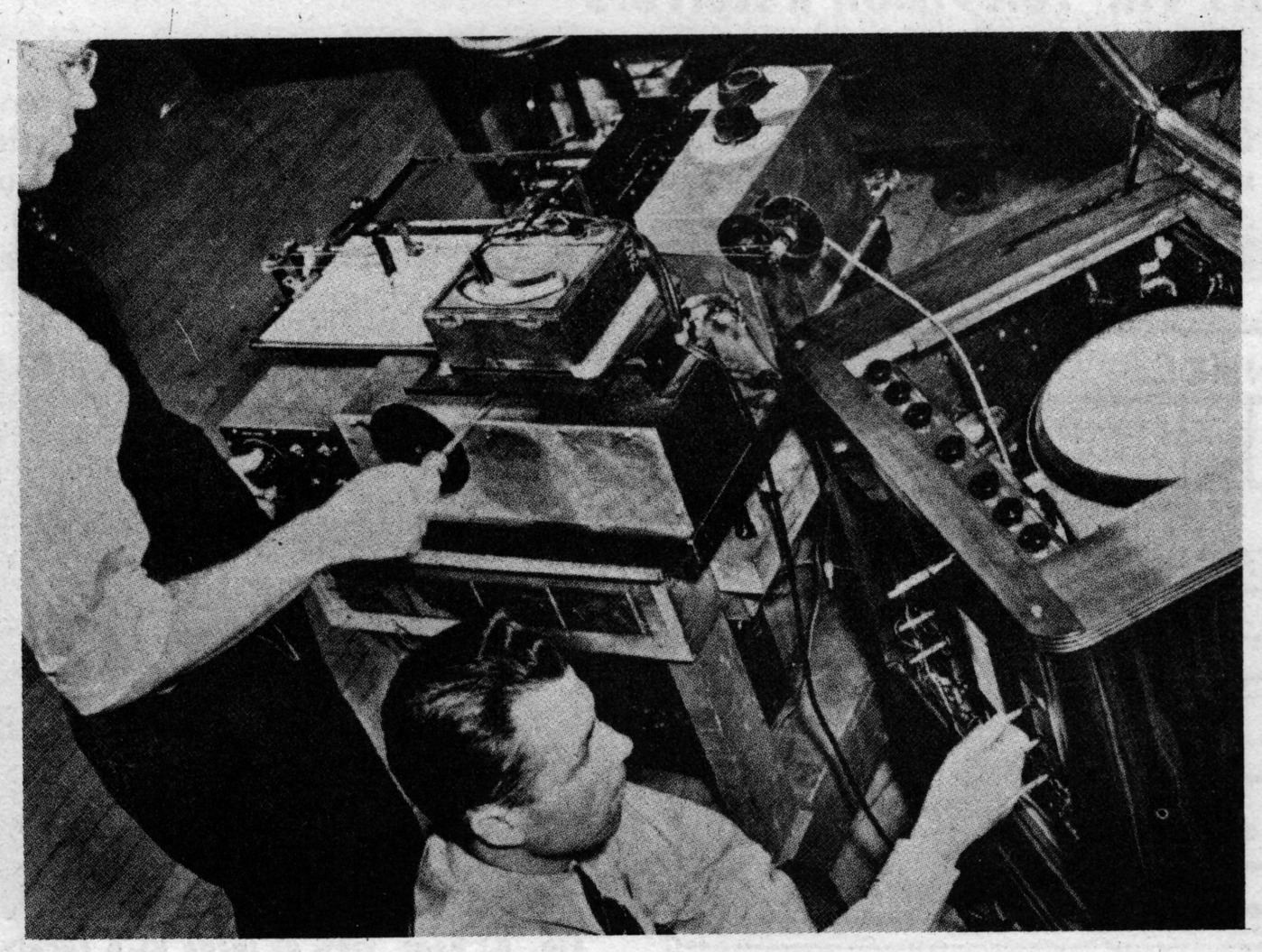

Fig. 5. Front view of RCA receiver with 12" tube.

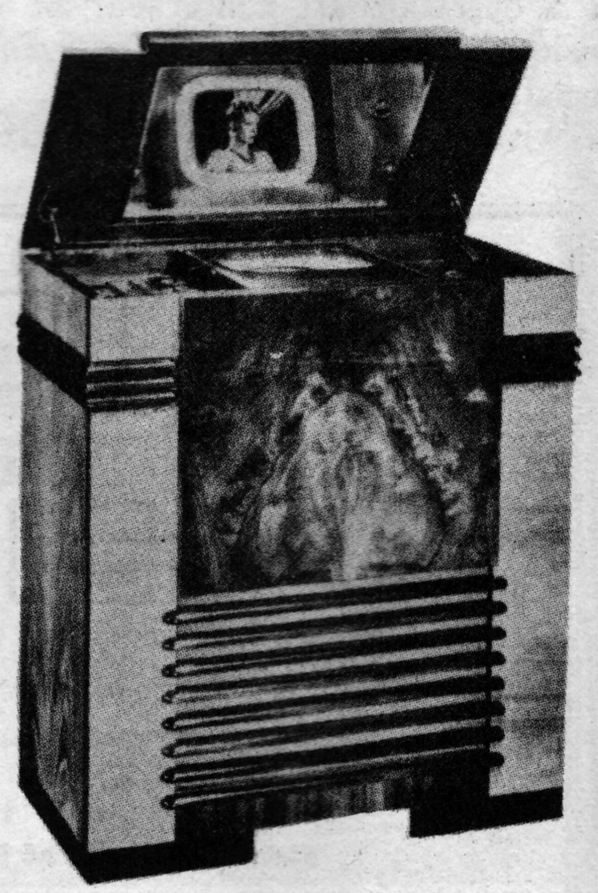

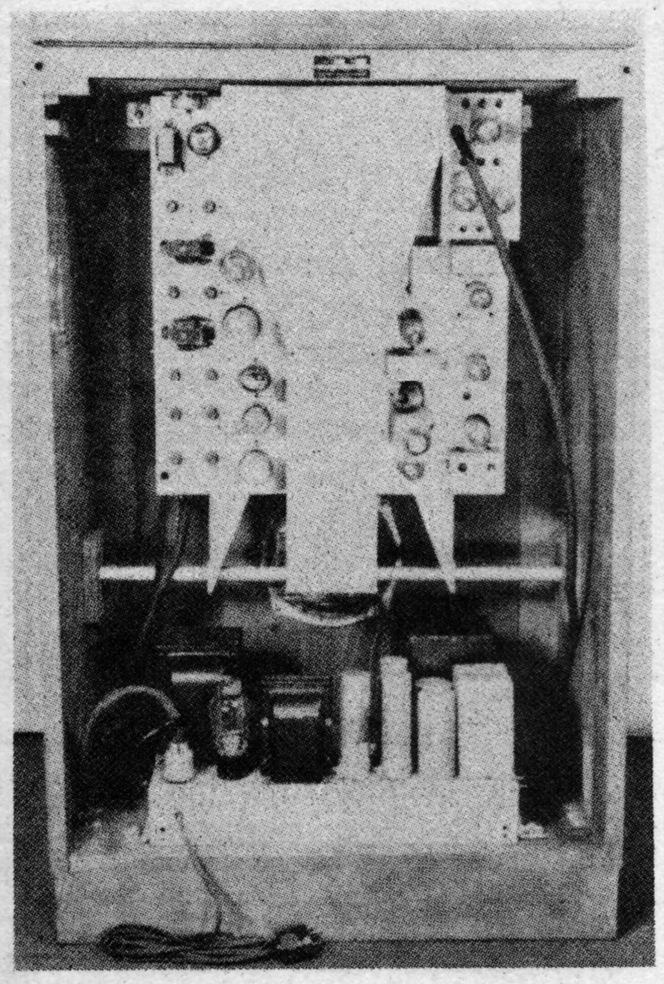

Fig. 4. Rear view of Philco receiver.

time. This is accomplished by designing the tuned circuits to give essentially uniform response over a wide band and yet provide ample discrimination against unwanted signals. This usually entails the use of a coupled circuit rather than a heavily loaded single-tuned circuit, because the selectivity for a given band width is better for the former. The new high transconductance type 1853 tube is almost universally used in this position, because it will give a satisfactory stage gain with relatively low plate load impedance.

As shown in Figs. 3 and 4 of Part II , there is a constant spacing of 4.5 megacycles between audio and video carriers in each of the television channels when arranged for single-side-band transmissions. This paves the way for simplification of tuning controls, as both the sound and sight signals may be tuned by the same operation. This spacing of 4.5 megacycles has superseded the 3.25-mc spacing which is discussed in the first twelve references in the bibliography. The process of readjusting a receiver to accommodate the new sound-sight carrier spacing of 4.5 mc is a minor one, however.

The output of the radio-frequency amplifier is fed to the first detector or converter stage. Here the local oscillator signal is heterodyned with the incoming signal resulting in sum and difference frequencies as in the conventional superheterodyne receiver. The oscillator may be adjusted to operate at a frequency above that of the incoming signal. The sound carrier is always at a higher frequency than the video carrier by 4.5 mc. This would cause the video intermediate-frequency (i-f) channel to lie at a higher frequency than the sound i-f channel, which is helpful in designing the video i-f channel circuits to pass the necessary band width. The various frequency relationships when the receiver is tuned to accept the lowest frequency television channel (44—50 mc) are shown in Table I.

It will be noted that the intermediate frequencies are selected in the order of 10 mc. This choice is determined by the necessity of avoiding strong signals from local transmitters at the intermediate frequencies. As amateur transmitters are probably the most likely sources of interference, the 7 and 14-mc amateur bands must be avoided. A lower picture i-f is not practical since with even 12.75 mc, a video-frequency band of 4 mc represents about 30% of the intermediate frequency. This complicates circuit design to achieve the necessary pass band.

The television receiver is actually two separate receivers beyond the converter stage. The sound only is accepted in the sound i-f channel for it is tuned sharply to that frequency. The picture signals are passed through the picture i-f channel, as the sound channel is not sensitive to frequencies lying within this range. It is interesting to point out that a short-wave broadcast type receiver tuned to 8.25 mc for channel I could replace the entire sound channel of the television receiver including i-f amplifier, second detector, audio amplifier, and loudspeaker. The broadcast receivers now appearing with claims that they are "wired for television" usually mean that the input terminals of the audio power amplifier are brought out, such as for a phonograph pickup.

The sound carrier and its sidebands are greatly amplified in the i-f amplifier and are then demodulated at the second detector. The audio voltage derived drives the audio amplifier which in turn drives the speaker in the usual manner.

The picture signal is greatly amplified in the video i-f channel, passed to the video second detector, and this demodulated video signal is conducted to the grid of the cathode-ray tube through a video amplifier. A signal of 10 to 50 volts peak-to-peak is necessary to drive the cathode-ray spot from full brilliancy to cutoff.

Above: Fig. 7. Smallest RCA receiver (5" c-r tube).

Below: Fig. 14. Effect of multiple reflections on received image.

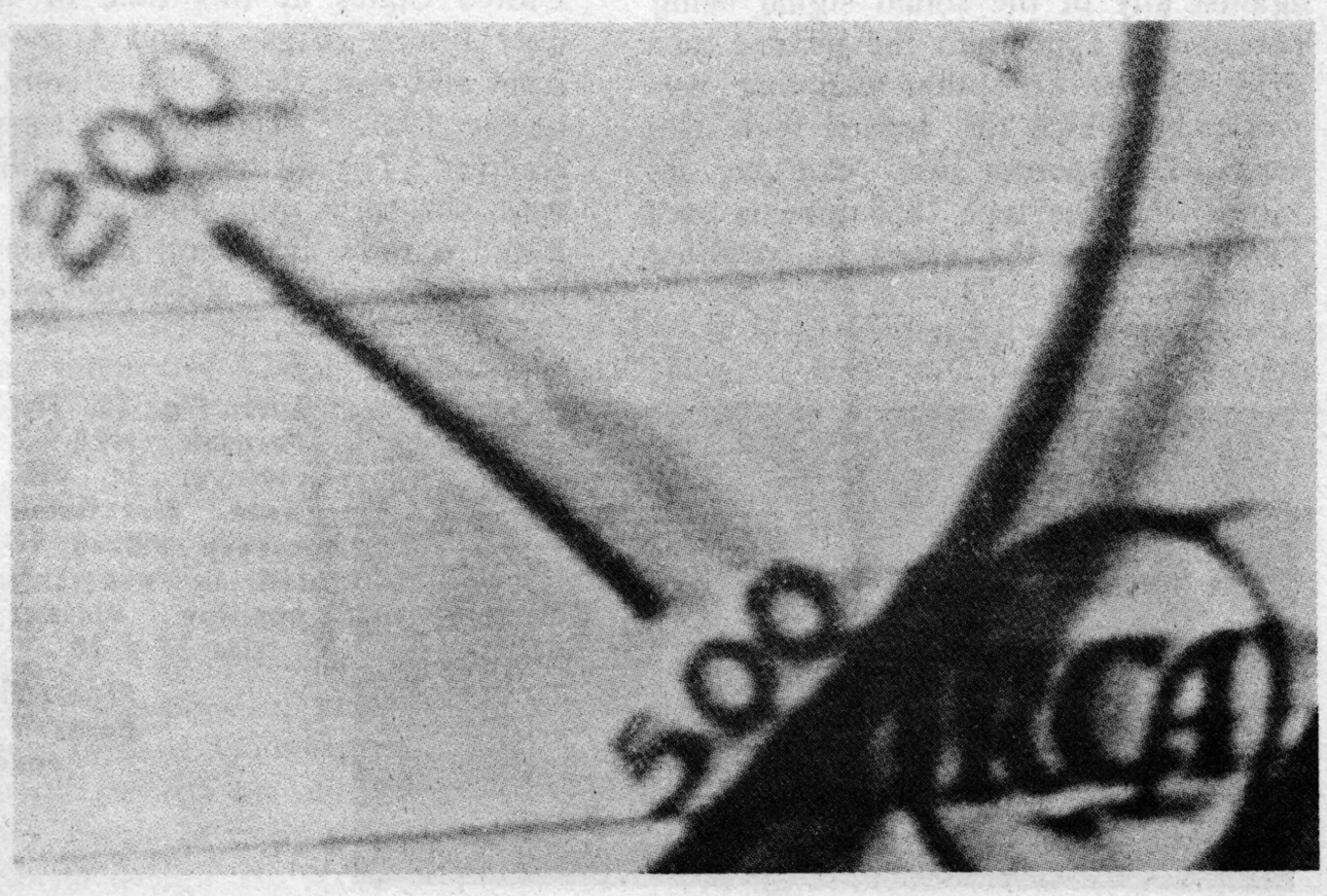

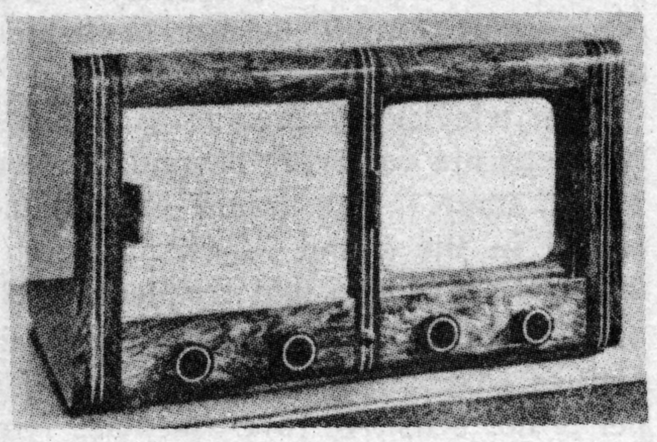

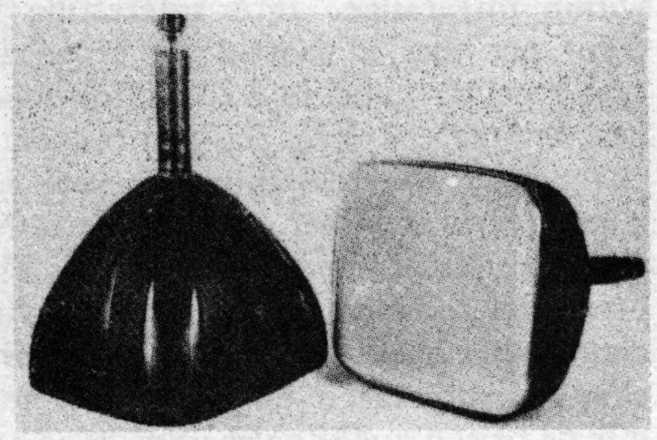

Right: Fig. 13. An RCA antenna kit.

Fig. 9. A table model receiver put out by Fernseh A. G. and Telefunken in Germany. Picture size approx. 7.7 x 8.9″. Fig. 10. Picture tubes used in receiver of Fig. 9. Note shape of tube. Photo courtesy Fernseh, A. G.

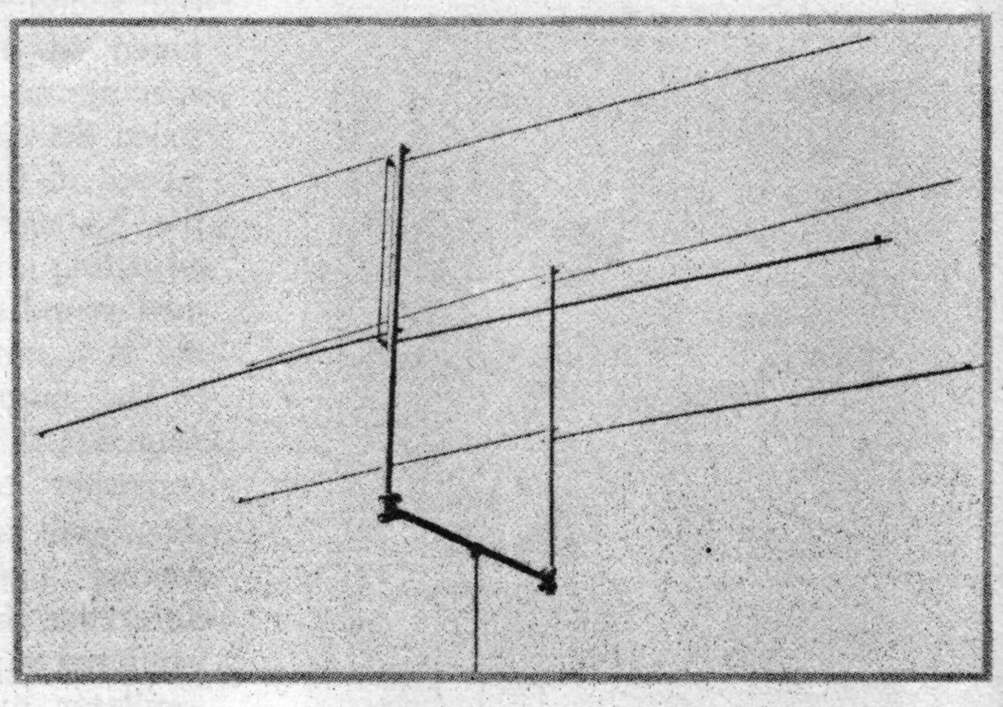

The video i-f amplifier circuits are quite interesting, especially in the manner in which the wide response range and steep sided characteristic is obtained. Fig. 2 shows one method[16, 17] of obtaining excellent characteristics. Fig. 2a shows the response characteristics obtained from an over-coupled, double-tuned radio-frequency transformer. The tighter the coupling, the farther apart the peaks occur. Fig. 2b shows the familiar response characteristics of a single, parallel-resonant tuned circuit. By placing one in the grid and the other in the plate circuit of a vacuum tube, the curve at (b) fills up the gap of (a) if the design is correct and the adjustment properly made. Several such stages will be necessary to build the sides of the composite characteristic up to a steepness sufficient to guard against any of the sound signal being passed and applied to the picture tube grid. There are other coupling networks by which the desired wide picture i-f response band can be obtained[2, 11]. The type 1853 tube is used extensively as the video i-f amplifier tube.

The picture signal passes from the i-f amplifier to the second detector. A diode is used for this function and the demodulated signal has video components up to 4 mc. This demodulated signal is amplified in the wide-band video amplifier[18] and applied directly to the grid of the picture tube.

The output of the picture second detector contains all of the horizontal and vertical synchronizing pulses in addition to the video signal itself. The synchronizing signals are "clipped" from the composite video signal by a synch separator circuit as shown in Fig. 2 of Part VI*. Other circuits separate the horizontal from the vertical pulses in a manner also described in Part VI. The horizontal synch pulses are then inserted into the horizontal deflection-signal generator to control its speed. The vertical pulses are likewise used to control the rate of operation of the frame deflection generator.

Figs. 3 to 7, inclusive, illustrate typical television receivers available in the United States at this time or in the near future. Figs. 3 and 4 show the front and rear views, respectively, of a recent Philco experimental television receiver. The method of mounting the main chassis is quite interesting. Figs. 5 and 6 show front and rear views of one of the most elaborate receivers available at this time put out by the RCA. The best engineering features are incorporated in this type, the price being secondary. In Fig. 6 note the cardboard protector around the picture tube serving both to protect those handling the tube from flying glass in case the tube is broken and to afford protection to the tube against accidental breakage. Fig. 7 illustrates the vision-only type of receiver, the sound channel stops at the second detector, the audio amplifier and speaker of a normal broadcast receiver being utilized for this function. As the resolution of the tube is limited by spot-size, the video channel width is purposely limited to 2.5 mc, another factor contributing to low cost. Fig. 8 shows a view of the Camden plant of the RCA company.

Figs. 9 to 12 illustrate some interesting developments abroad which have not yet been put in commercial form in this country. Fig. 9 is a table model television receiver giving an extremely large picture (7.7 x 8.9 inches) for the size of the cabinet. The cabinet size is: height 14.5 inches, breadth 25.5 inches, and depth 15 inches. A modest priced receiver having a picture about this size would give far more satisfaction than the picture possible on a 5-inch diameter tube. The picture size of this model El German receiver is due

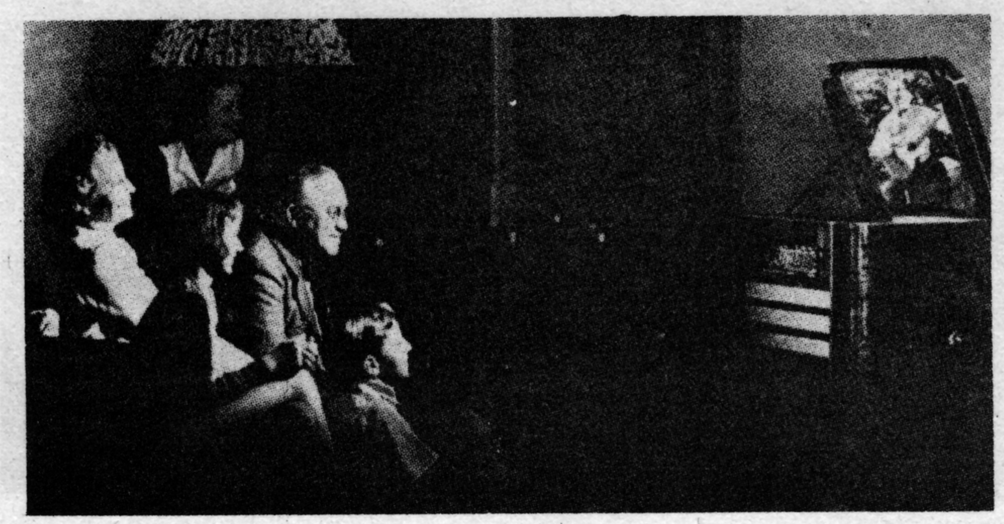

Left: Fig. 12. The Fernseh HPE-5-R receiver in use. Note directional screen affixed to lid in viewing position. Picture size 17 x 20″.

Right: Fig. 11. The Fernseh HPE-5-R receiver.

to the development of the cathode-ray tube of Fig. 10. This tube uses magnetic deflection in both the horizontal and vertical directions as well as magnetic focusing.

Another development in television receivers of which we will hear more in this country is exemplified by the Fernseh receiver model HPE-5-R home projection receiver shown in Fig. 11. This receiver is shown in use in Fig. 12. A directional screen is used to give a brighter image in the forward direction. A tiny, but intense, image is formed on the fluorescent screen by a high-velocity electron beam, and this small image is then projected onto the screen by a system of lenses.

The Television Receiving Antenna

The sound broadcast receiver differs from the television receiver in that practically anything can be used for an antenna with quite satisfactory results.

The television receiver will demand a great deal more of the antenna both as to its efficiency and to its noise pickup. Due to the fact that much ignition interference originates on the streets and roads, the antenna should be located as far to the rear of the lot as practicable. As the direct line-of-sight ray is the more dependable at frequencies of the order of 50 mc, the television antenna should be as high as possible. There seems to be a difference of opinion as to which polarization has the better characteristics with regard to noise pickup, but the horizontally polarized wave is being used most in this country. Thus, a horizontal dipole placed as high and as far from the street as possible will probably give good results. Experimental determination of the best position is the suggested method.

The specific inductive capacities of many construction materials as stone, brick, paving material and even soil, are enough greater than air to give high reflection factors under certain angular conditions, provided the surface is comparable to a wavelength in size. For this reason, we should expect, and we actually do get, severe reflection phenomena. For RMA standards and a picture tube 12 inches in diameter, the scanning spot travels about 0.06 inch while a radio wave is traveling 400 feet[19]. This may result in an "echo" image slightly displaced from the primary image which results in a general loss in detail. Fig. 14 taken from Seeley's paper[19], showing an enlarged portion of a received test image, illustrates an aggravated reflection condition. These reflections may occur from surrounding objects, or they may be due to transmission line impedance mismatching giving rise to discontinuity reflections. The transmission line effect will not be objectionable unless the line exceeds 100 feet in length. Even then it can be minimized by proper matching of the elements.

Bibliography

The Engstrom and Holmes series appearing in *Electronics* as follows:

1. "Television Receivers," April, 1938, page 28.
2. "Television I-F Amplifiers," June, 1938, page 21.
3. "Television V-F Circuits," August, 1938, page 18.
4. "Television Synchronization," November, 1938, page 18.
5. "Television Deflection Circuits," January, 1939, page 19.
6. "Power for Television Receivers," April, 1939, page 22.

The Fink series appearing in *Electronics* as follows:

7. "A Laboratory Television Receiver"—I, July, 1938, page 16.
8. "A Laboratory Television Receiver"—II, August, 1938, page 26.
9. "A Laboratory Television Receiver"—III, September, 1938, page 22.
10. "A Laboratory Television Receiver"—IV, October, 1938, page 16.
11. "A Laboratory Television Receiver"—V, November, 1938, page 26.
12. "A Laboratory Television Receiver"—VI, December, 1938, page 17.
The above twelve articles are available in reprinted form in a booklet entitled "Television Receiver Practice."

The Goldsmith series appearing in COMMUNICATIONS as follows:

13. "Television Economics"—V, June, 1939, page 21.
14. "Television Economics"—VI, July, 1939, page 20.
15. "Television Economics"—VII August, 1939, page 18.

16. Aiken, "Two-mesh Tuned Coupled Circuit Filters," *Proc. IRE*, Vol. 25, No. 2, p. 230, February, 1937.
17. Loh, "On Single and Coupled Tuned Circuits Having Constant Response-Band Characteristics," *Proc. IRE*, Vol. 26, No. 4, p. 469, April, 1938.
18. Everest, "Wide Band Television Amplifiers," I & II, *Electronics*, January, 1938, and May, 1938.
19. Seeley, "Effect of the Receiving Antenna on Television Reception Fidelity" *RCA Review*, Vol. II, No. 4, April, 1938, p. 433.
20. Pock and Epstein, "Partial Suppression of One Side-Band on Television Reception," *RCA Review*, Vol. I, No. 3, January, 1937, p. 19.
21. Perkins, "Television Receiver Design Factors," COMMUNICATIONS, February, 1939, p. 32.
22. Waller, Kinescopes for Television Receivers," COMMUNICATIONS, April, 1939, p. 21.

Part VIII: *Television Transmission*

THE television picture transmitter, although utilizing the same basic radio principles as the aural broadcasting transmitter, has demands made upon it that place video transmission in a class by itself. In the first place, the frequency of operation based upon the recent tentative television channel allocation imposes severe handicaps. At the present state of the art it is very much more difficult to obtain a few kilowatts of radio-frequency energy in the range 44-108 mc than at the lower frequencies. This is near the boundary region beyond which the efficiency of the conventional triode and multi-element thermionic tubes decreases at an alarming rate. True, there are special circuits and modes of operation which tend to extend this region, but the fact remains that it takes a finite time for an electron to travel to the anode and at these high frequencies this transit time decreases the oscillator or power amplifier efficiency of the conventional vacuum tube. Decreasing the physical size of the tube appears to have definite practical limits, although for the above mentioned frequency range recently developed tubes of special design are serving well.

Band Width

A rather illuminating comparison can be made between sound broadcast transmitters and television transmitters in the matter of frequency band width. In the former, "high fidelity" is often the claim for transmitters that will reproduce faithfully frequencies up to the order of 10 or 15 kc. As far as the frequency range of the video signal is concerned, we have seen in Part II that necessary energy resides in frequency components as high as 5 mc. To retain this band width throughout the modulator, modulated amplifier, and the

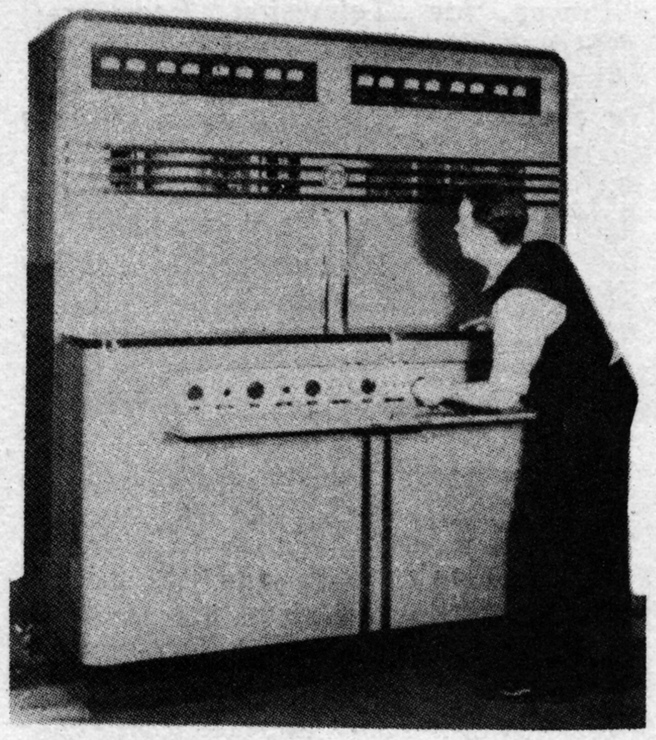

Fig. 1 left: A view of the 1 kilowatt television transmitter recently placed on market by RCA.

Fig. 2 (Below). A rear view of the 1-kilowatt television transmitter shown in Fig. 1.

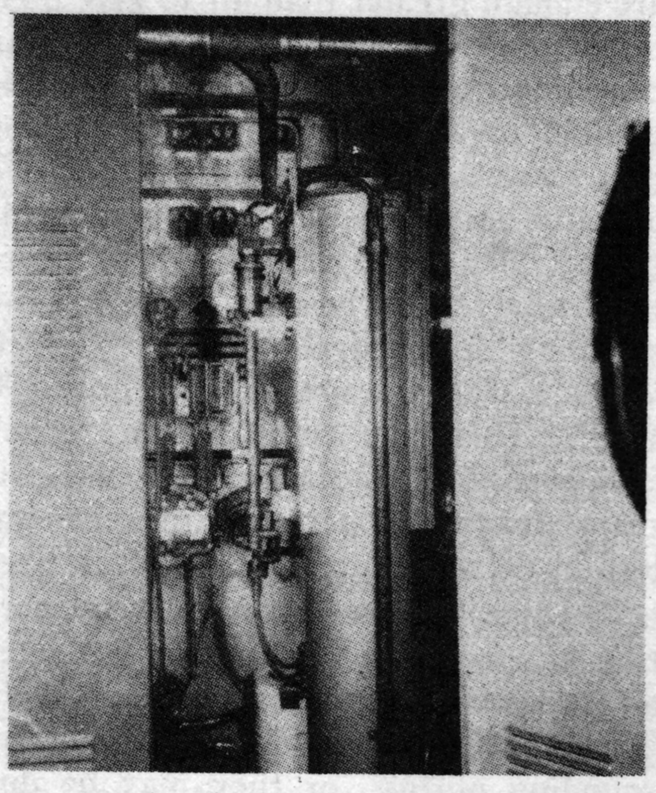

linear stages is no small task.

Modulation System

The usual method of plate modulation has been largely abandoned for television transmitters[1, 2, 4], because of the difficulty in developing sufficient video power fully to modulate the radio-frequency amplifier and to obtain a modulation reactor having proper characteristics over a wide band. A low-level plate-modulation scheme would entail the need of many wide-band linear amplifiers which are about as costly as the wide-band modulating channel necessary for high-level plate modulation. The reasons underlying these difficulties are bound up with the necessity for low amplifier load impedances in order that the wiring and tube capacitances do not unduly discriminate against the high frequencies.

The system of grid modulation has been adopted almost universally in this country, for with this system the side-band energy is derived from the modulated amplifier itself by the mechanism of changing its efficiency over the modulation cycle. The low power output per tube in the modulated stage is a limiting factor with this system of modulation, so it is not uncommon to see television transmitters having modulated amplifier tubes apparently far too large for the carrier power involved. This arises from the plate dissipation limit of the tubes and from the fact that a large voltage drop must be tolerated across the tube during low modulation periods in order that the modulation peaks be cared for. In spite of this low over-all efficiency of the grid system of modulation, for television purposes it offers the most economical and satisfactory combination at the present time.

D-C Component

In voice transmission the wave shape is essentially symmetrical with the axis at all times, the axis being defined as the line which equally divides the area under the wave. In television transmission this is usually not the case. The degree of symmetry is determined largely by the image being scanned at that instant[1]. This continuous axis shift may be considered as a varying d-c component. To improve the transmitter efficiency by reducing the dynamic modulation range, this d-c component may be used to shift the average carrier to follow the average illumination of the picture. At the receiver this d-c component is re-inserted at the cathode-ray tube grid so that a faithful video reproduction results. The d-c insertion at the transmitter is only for more efficient operation of the transmitter, however.

Vestigial Transmission

With the tentatively allotted television channels including an overall width of 6 mc, only a relatively low-definition image could be transmitted by the conventional double side-band system. Consequentially, it is the practice to send the upper side-band completely and the lower side-band "vestigially." That is, as much of the lower side-band as economically feasible is cut off. Here again is a relatively complex feature of the television transmitter which is not common to sound broadcasting. This side-band is removed by means of a filter in the antenna circuit. Coaxial transmission line segments of suitable lengths to give the required capacitance, inductance, or impedance are used as the elements of the filter.

Distortion Requirements

The hum-level requirements of a television transmitter are essentially the same as those of a high-quality broadcast transmitter. The harmonic distortion requirements for visual broadcasting are much less severe than for sound broadcasting. This arises from the fact that the detail of the picture will not suffer particularly from a non-linearity of the system, but only one degree of halftone reproduction at the reproducing tube. That is, details of the image transmitted through a non-linear system, although appearing in their proper position and size, may not have the proper degree of light and shade as compared to the other parts of the image. This relative insensitivity to a modest degree of nonlinearity also makes grid modulation more attractive.

Fig. 1 is a photograph of a 1-kw television transmitter recently placed on the market by RCA. Fig. 2 is a rear view of one unit of this same transmitter. Fig. 3 is a highly simplified block diagram

Fig. 3. Diagram of RCA 1-kw television transmitter.

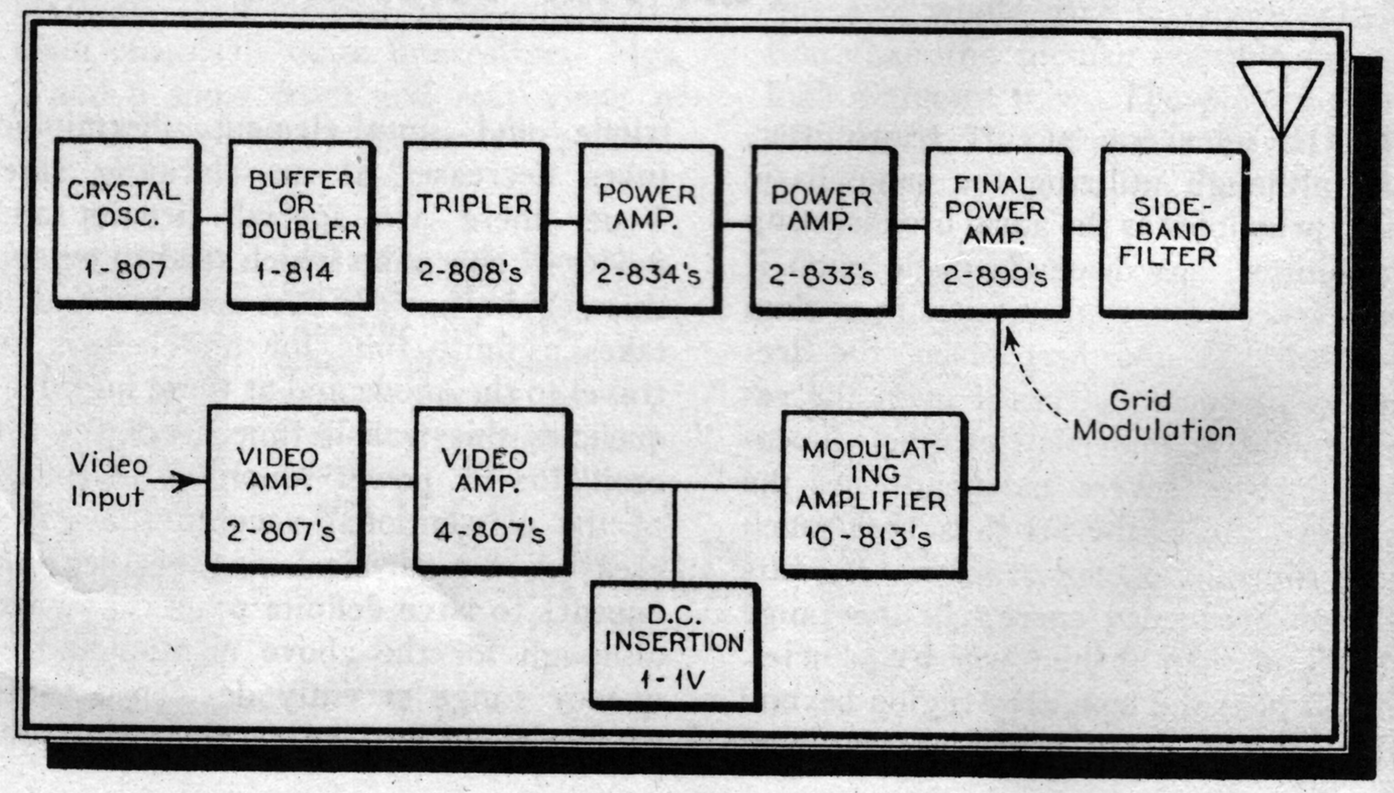

of the radio-frequency and video-frequency sections showing the tube complement utilized.

Fig. 4 shows video control position in the National Broadcasting Company's television studio 5. The operator has command of the studio floor through windows before him which are tinted to minimize glare from the highly lighted studio. The three knobs at the operator's left control the electrical focusing of the iconoscopes in the studio cameras. The operator is adjusting the brightness and video gain controls for best contrast and brightness in the image. The group of knobs to the right of the operator insert voltages of various shape and phase into the video signal to counteract the effect of spurious "shading" signals generated in the iconoscope. These spurious signals apparently are due to the fact that more secondary electrons are generated at the iconoscope mosaic than are supplied by the beam and a shower of electrons falls back on the mosaic. These electrons cause a random charge distribution over the mosaic which has no relationship to the video signal, but causes the "dark-spots." These dark spots are neutralized as well as possible by the adjustment of the knobs shown in Fig. 4. These spurious signals cannot be entirely eliminated as shown by the image of Fig. 5, which is the image appearing on the monitor tube above the operator of Fig. 3. The dark areas and the white borders on the picture are a result of these effects and the attempt to neutralize them. The waveform of the video signal is constantly monitored by means of the oscillograph beside the image tube.

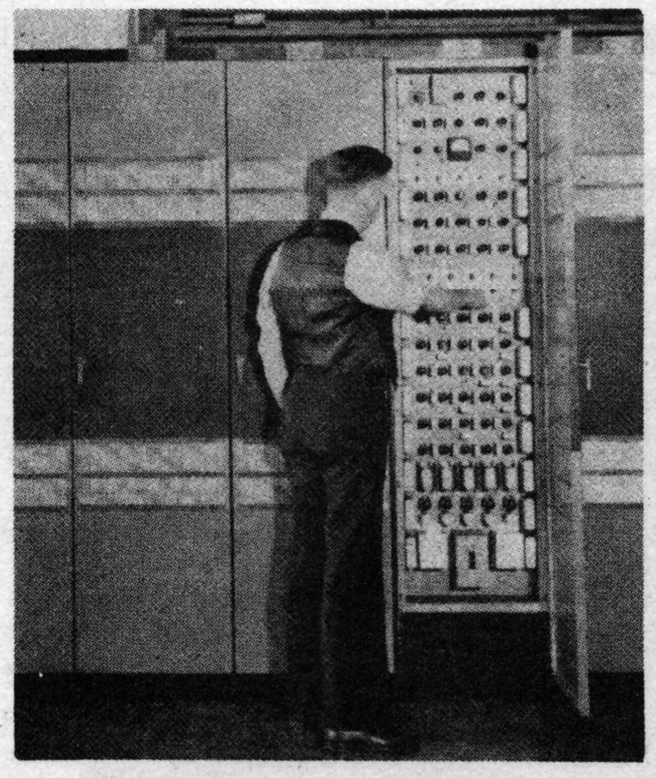

Fig. 6 (Above). Synchronizing impulse generator (RCA photo).

Fig. 6 shows a view of the synchronizing pulse generator which generates the pulses for both horizontal and vertical synchronization. The required regulated power supplies and amplifiers are included within the other cabinets.

Television Transmitting Antennas

The antenna to be used with a television transmitter presents a problem in the relative difficulty in attaining constant characteristics over the necessary frequency band. Attaining these constant characteristics over a given band width becomes easier the higher the frequency of operation. Therefore, we can expect considerable simplification of vision antenna structures between the 44-50 mc channel and the 102-108 mc channel. As the trend is toward the higher frequencies, the extent of the experimental work that has been done is highly justified.

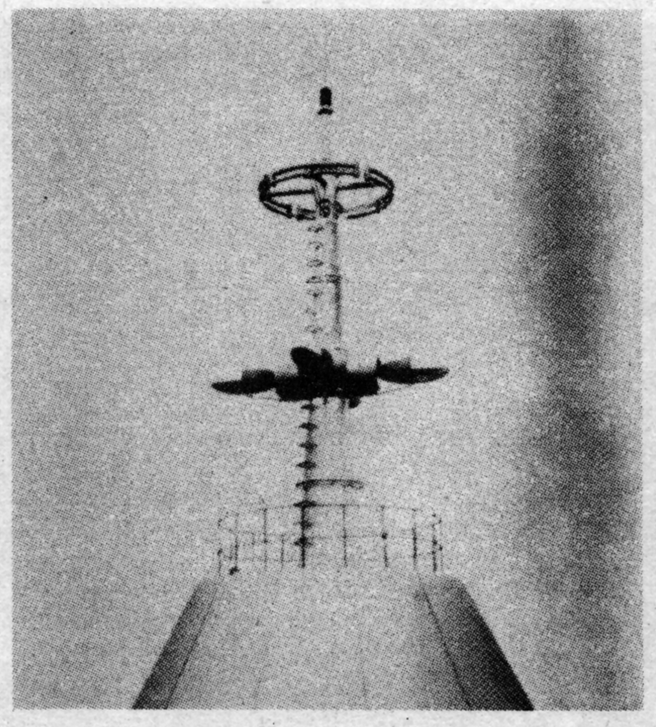

Fig. 7. Television transmitting antenna atop Empire State Building.

Fig. 7 shows a novel approach to the problem of attaining constant characteristics over a wide frequency band. This is a photograph of the vision and sound antennas atop the Empire State Building. The vision antenna is of particular interest and the neat experimental evolution of the final shapes as reported by Lindenblad is illustrated in Fig. 8, which is taken from his paper. In general, elliptical shapes of all of the radiator surfaces seemed to give the most constant impedance characteristics. In order that the protruding portion of the ellipsoid and the collar radiate equally, their relative lengths should be in the ratio of 7 to 5 as illustrated in Fig. 9, which is also taken from Lindenblad's paper. This gives an input impedance in the order of 110 ohms. The best ratio between major and minor axes of the ellipsoid is 15 to 6. The optimum ratio of mean collar diameter to ellipsoid diameter was found to be 3 to 2. The ellipsoid is bonded to the collar by a specially designed bracket for lightning protection. For vertically polarized waves, a single unit could be mounted vertically. For the desired horizontal polarization, 4 units were arranged

Fig. 8 (Below). Experimental steps in determining optimum proportions of antenna in Fig. 7.

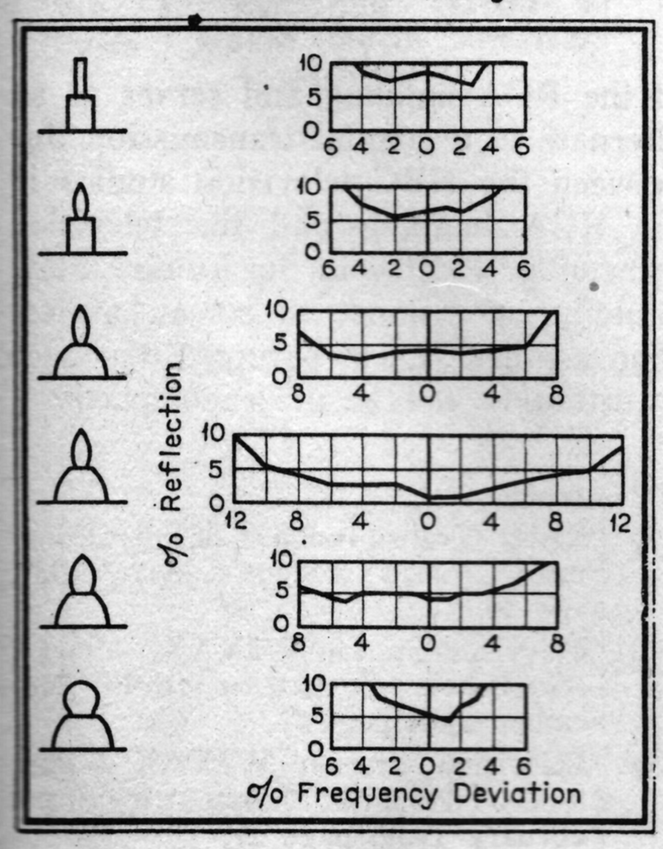

Fig. 9. Optimum proportions of single radiator modified for supporting bracket.

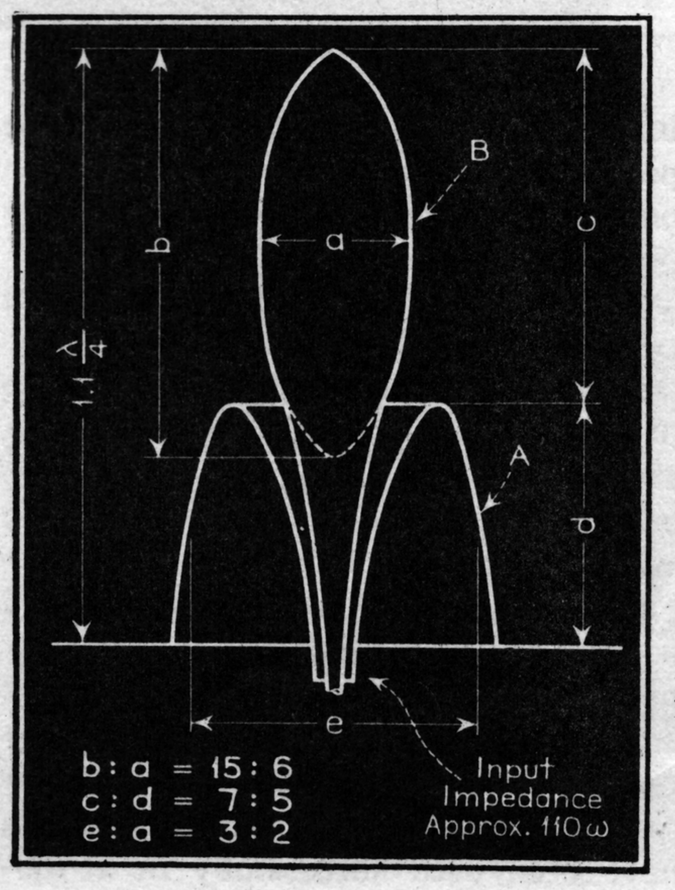

Fig. 10. Cutaway view of coaxial transmission line (RCA photo).

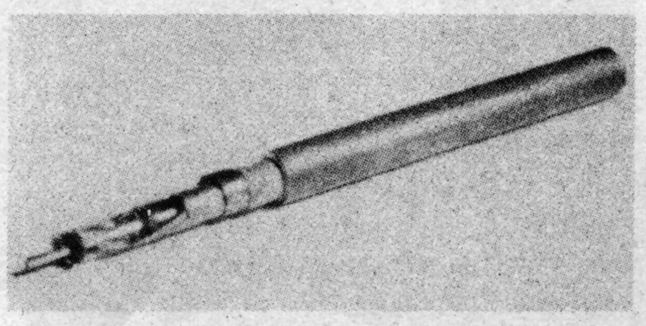

Fig. 4 (Above). The video control desk of the NBC television studios.

around the tower excited in progressive phase quadrature as a "turnstile" antenna. It was found upon completion that this antenna had uniform characteristics over the range of about 30 to 60 mc, or 6 to 10 times that obtainable with other conventional designs with complicated correction networks. This truly represents a real advance in antenna technique.

Interconnecting Links

In the near future the problem of simultaneous network operation of a multiplicity of local television stations must be faced. This will be a particularly difficult economic problem in the United States because of the great distances and relatively low population density in most areas. The economic phase is even a limiting factor in bringing to reality the proposed Birmingham provincial station outside of London in a relatively highly populated area.

Fig. 11. 177-mc u-h-f transmitter linking Radio City studios with Empire State Building transmitter.

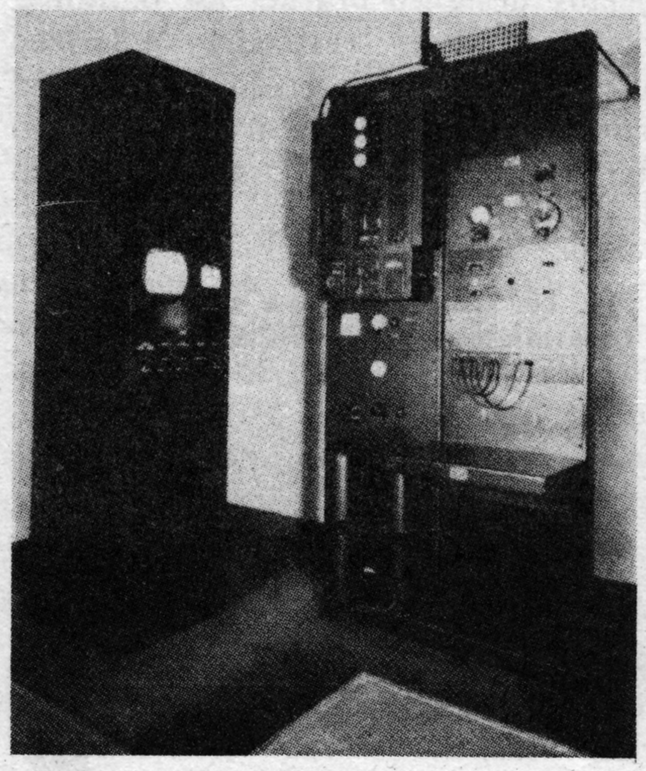

At the present time there seem to be two general methods of approach to the interconnection problem. One is the use of transmission lines. Over relatively short distances a selected pair in an ordinary telephone cable has been used with correction for remote television program pickups. The coaxial cable is well adapted to the transmission of video signals because the attenuation is fairly low and quite uniform over a wide frequency range. Unattended amplifying units located in manholes at proper intervals have been used successfully in a 100-mile trial section between New York and Philadelphia. A lead sheathed coaxial cable suitable for such purposes is shown in Fig. 10.

The second approach to the problem is that of ultra-high-frequency radio link transmitters. At high frequencies very efficient and highly directional antenna structures can be cheaply constructed. By the use of such antennas for both the receiving and transmitting functions, low transmitter power acquirements and a minimum of interference may be attained. It is conceivable that an extensive network could be built up of many such units located on strategic geographical points at distances depending upon the line-of-sight range obtained. It is also possible that sufficient reliability could be realized in an unattended station or at least by remote control.

Fig. 5 (Below). Monitoring image and wave shape of video signal. See tubes above control panel of Fig. 4.

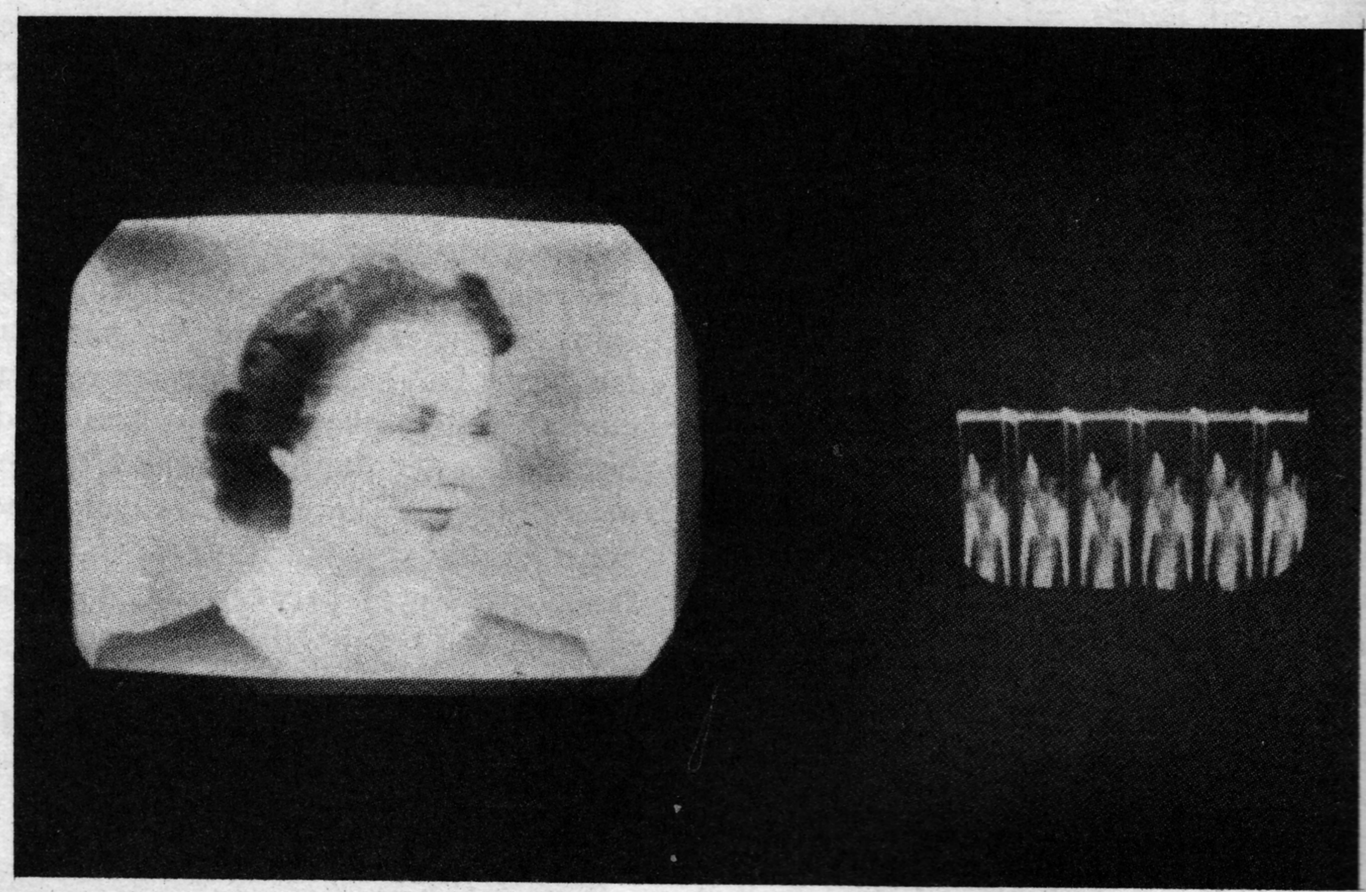

Fig. 11 shows an experimental link transmitter operating on a frequency of 177 mc. It is located on the 10th floor of the RCA building and serves as an alternate to a coaxial transmission line between the NBC television studios in the RCA building and the television transmitter located in the Empire State Building, a distance of somewhat less than a mile. It will be noted that such transmitters can be made compactly.

Bibliography

(1) "Radio Transmission Considerations" Smith, COMMUNICATIONS, March 1939, page 30.

(2) "Televison Station W2XAX"—Part 1—Goldmark, COMMUNICATIONS, November 1938, page 7.

(3) "Television Station W2XAX"—Part 2—Goldmark, COMMUNICATIONS, February 1939, page 27.

(4) "Television Transmitters," *Electronics*, March 1939, page 27.

(5) "Experimental Studio Facilities for Television"—Hanson, *RCA Review*, April 1937, page 3.

(6) "Television Radio Relay"—Trevor and Dow, *RCA Review*, October 1936, page 35.

(7) "Television Transmitting Antenna for Empire State Building"—Lindenblad, *RCA Review*, April 1939, page 387.

(8) "Equipment Used in the Current RCA Television Field Tests"—Beal, *RCA Review*, January 1937, page 36.

Part IX: *Foreign Developments*

BECAUSE of the old American custom of believing that little, if anything worth while is ever done outside the bounds of these United States, it would seem appropriate in this series to pause long enough to take a hurried glimpse at the development work in television in other countries. While such a study does not fit any too well into the main title of the series, an appreciation of foreign television activities is absolutely necessary to view our domestic developments in their proper perspective.

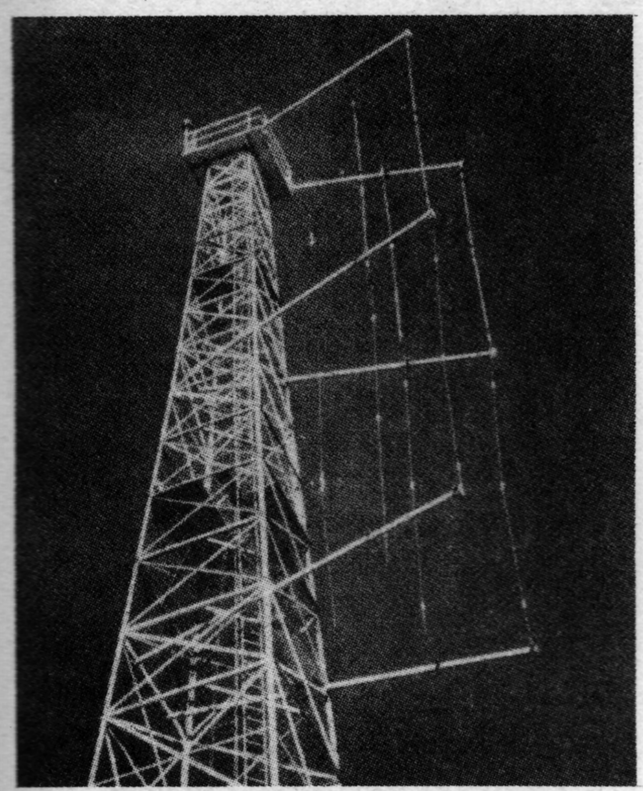

Fig. 1. Radiating system of Rome - Mount Mario television transmitter.

England

The television activities in England are perhaps the most intensive of any foreign country. The British authorities have led the world in providing an ambitious program service. The radio listener fee of ten shillings per year was the source of the funds which made this possible. At the outbreak of the war there were reported to be about 25,000 television receivers in use with others being purchased at the rate of 1000 to 1500 per month. The television broadcasts of one hour each afternoon and two hours each evening were abandoned "for national defense purposes" when the war began, and at this writing have not been reestablished.

The London transmitter is located at the edge of the city in Alexandra Palace where broadcasts began in August, 1936. The standards adopted are 405 lines, 50 frames interlaced, giving 25 complete picture scans per second. The equipment in use was provided by the Marconi-E. M. I. company and is built around the "Emitron" camera which is basically a mosaic-storage tube patterned after the iconoscope. The transmitter has a peak output power of 17 kw corresponding to "full picture white," and is modulated by the conventional grid system. Double-sideband amplitude modulation, "infra-black" synchronizing pulses, and positive modulation are used.

Outside broadcasts are accomplished by mobile units utilizing radio-link transmitting special balanced-pair low-capacitance cables primarily designed for television signals, and a limited use of ordinary telephone-cable pairs suitably equalized for short distances. A line utilizing the special balanced pair runs past points from which many broadcasts emanate, such as Buckingham Palace, Trafalgar Square, and Piccadilly Circus. The British system has been covered quite thoroughly in several recent articles published in the United States.

Italy

A relatively insignificant amount of

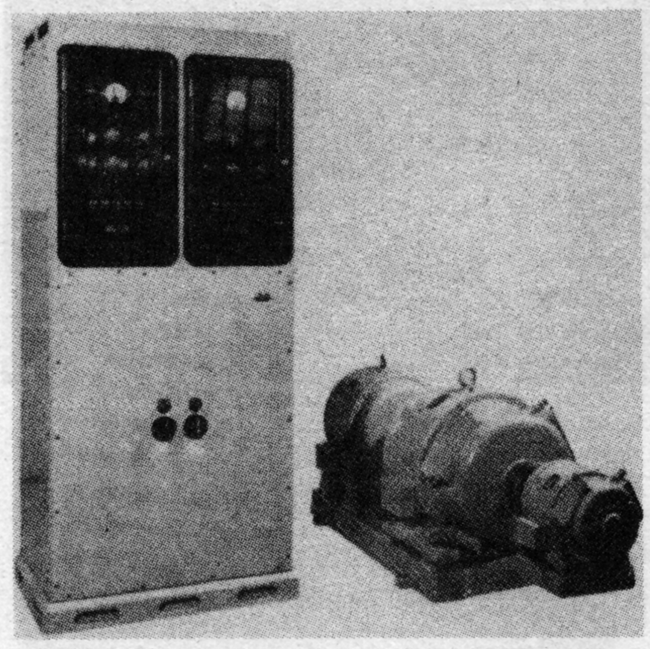

Fig. 4. Rotary converter and automatic anode voltage regulators of Italian transmitter.

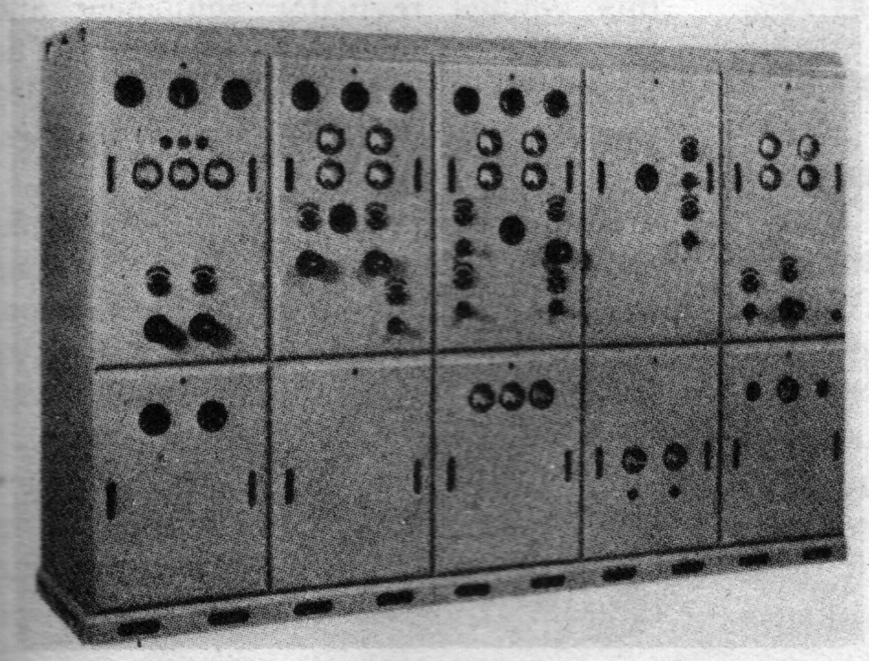

Fig. 2. (Left) Safar standard type television transmitter for Italian stations.

Fig. 3. (Right) The Safar transmitter with cover plates removed.

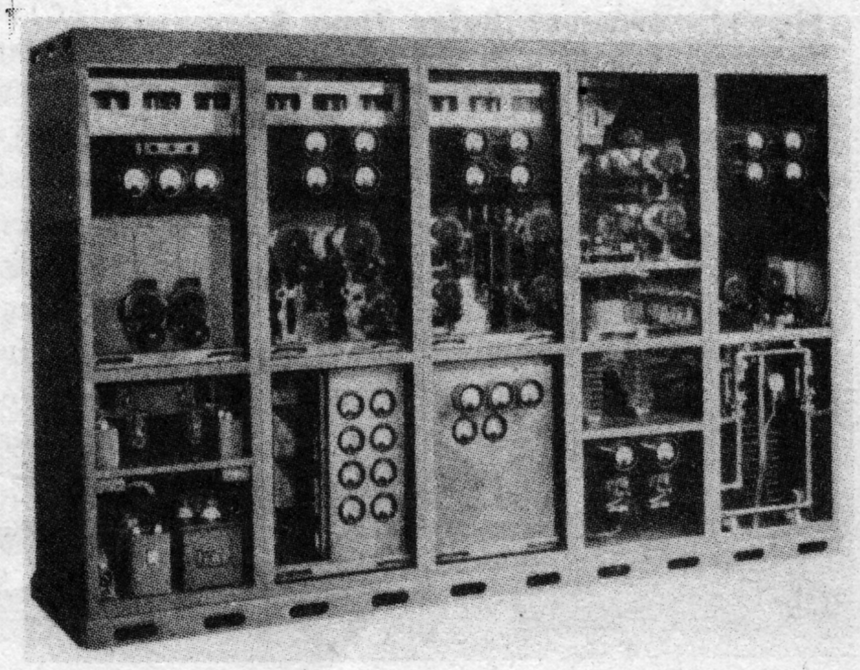

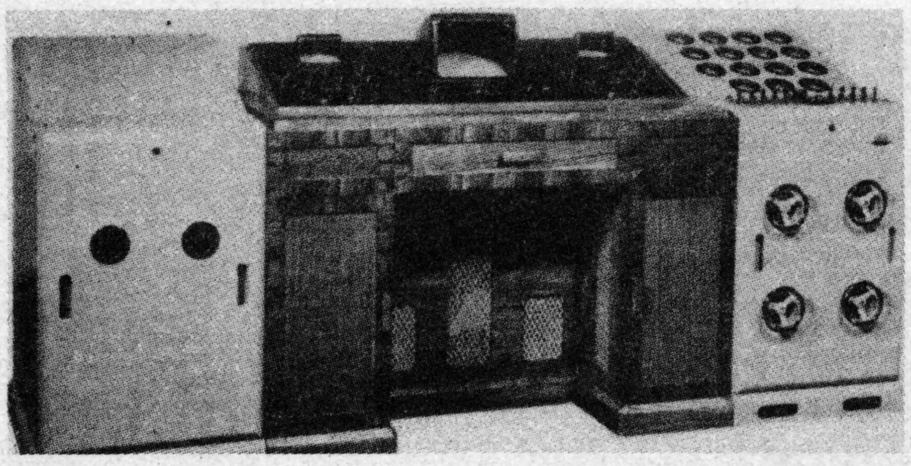

Front (Fig. 5, left) and rear

(Fig. 6, right) views of Safar control desk.

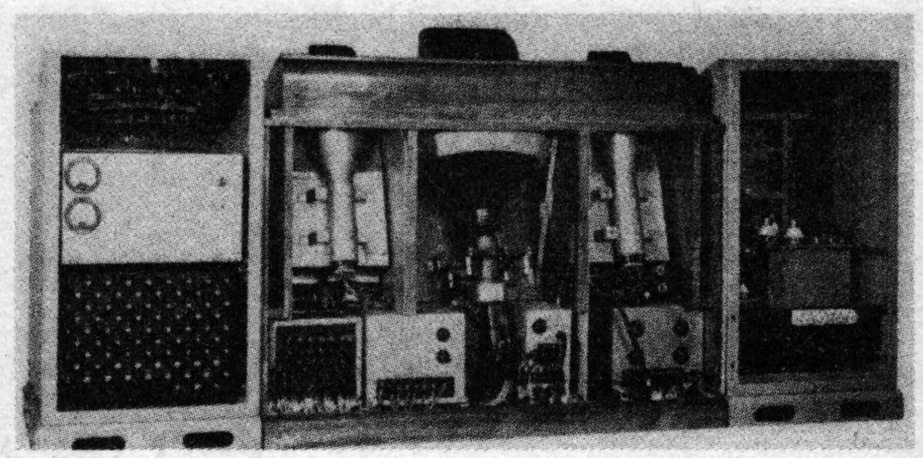

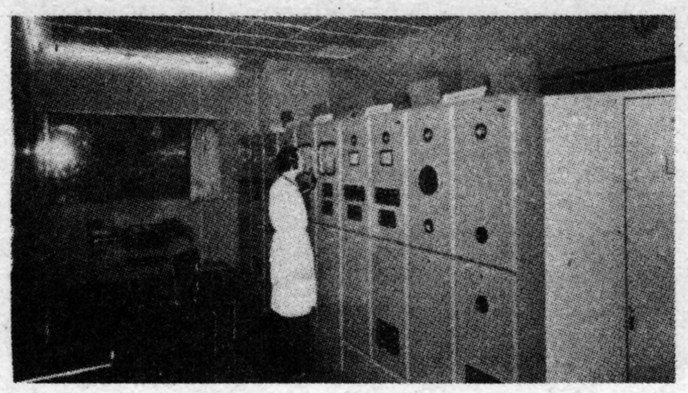

Fig. 9. (Above) Synchronizing apparatus, mixer and controls of Safar television cameras.

Fig. 10 (Below) Stage in the Safar television theatre.

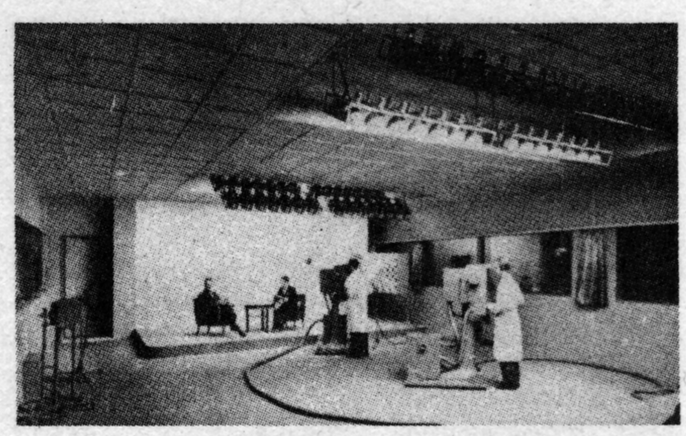

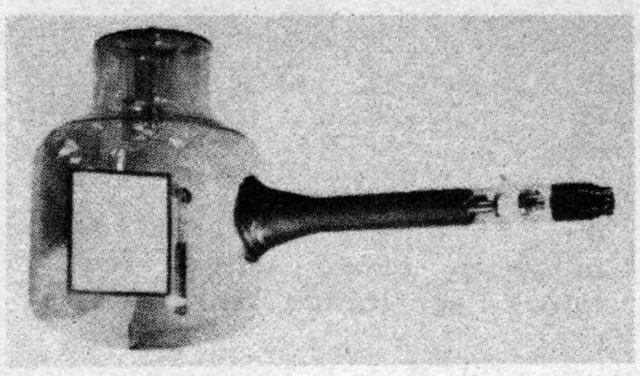

Fig. 11. (Above) Safar Type B Telepantoscope, a mosaic device used in telecameras.

Fig. 14. (Below) A 40-kv Safar tube for projection receivers.

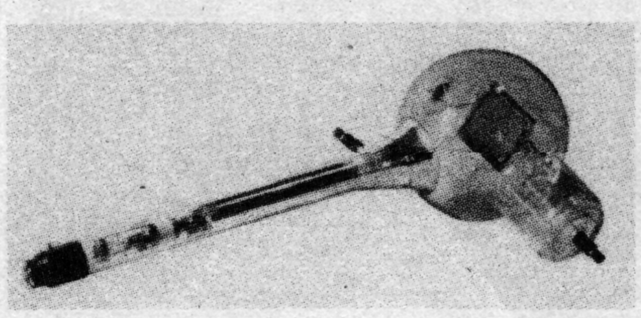

information on the Italian television activities has appeared in the English-language press. A consistent, though limited, program of research has been conducted by the Societa Anonima Fabbricazione Apparecchi Radiofonici (the "Safar") in Milan, the efforts of Mr. Arturo Castellani being conspicuous. Outstanding in their list of accomplishments is the Rome station. This station is built on the top of Mount Mario so that the transmitting dipoles are at a height of about 500 feet over the city. This hilltop location is situated at the periphery of Rome and, naturally, has the greatest field strength direct toward it. A signal of at least 200 microvolts is delivered to the receiver terminals by the usual dipole in all parts of the city. This Mount Mario antenna structure is shown in the photograph of Fig. 1.

The transmitter's voice carrier is 41 mc and the video carrier is 44.1 mc arranged for double sideband transmission. The output of the transmitter has a peak power of 5 kw for a 6-mc bandwidth. Figs. 2 and 3 are views of the Safar television transmitter with the front plates in place and with them removed. Some of the specifications of this transmitter are:

(a) Frequency distortion ± 1.5 db for 0-3 mc band.

(b) Phase distortion 1 microsecond 25-1000 c, 0.5 microseconds 1000 c to 1.5 mc, and 0.2 microseconds between 1.5 and 3 mc.

(c) Harmonic distortion 4% at 90% modulation.

(d) Noise level 0.5% at 100% modulation.

(e) Stability of radiated frequency 1 part in 200,000.

An interesting fact is that all tubes in this transmitter are pentodes. This results from the lower grid currents and the greater ease of neutralization. The final amplifier tubes are water cooled. All anode and bias voltages are supplied by conventional rectifier-filter systems; while the filaments are lit by a rotary converter. The anode voltages

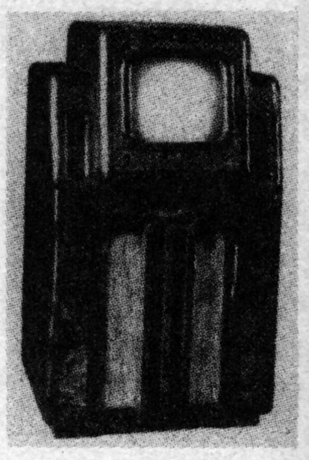

Fig. 12. A standard type of Safar television receiver.

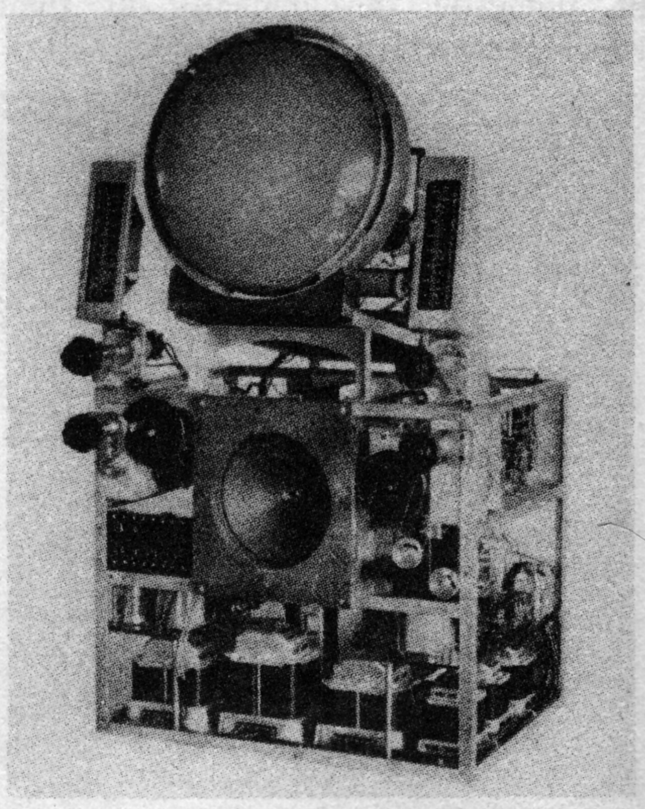

Fig. 13. Chassis of a Safar receiver.

for the video section and the modulated r-f stages are equipped with automatic voltage regulators. Fig. 4 is a view of this voltage regulator equipment and the filament rotary converter. The transmitter is monitored and controlled from the operating desk shown in Figs. 5 and 6.

The Safar television theatre illustrated in Figs. 7 and 8 is a typical one shown at the Milan Leonard exhibition, after which theatres in other parts of Italy will eventually be patterned. These theatres have modern treatment in every way as evidenced by the photograph. Fig. 9 shows the synchronizing apparatus, mixer, and controls for the cameras arranged so that all operations

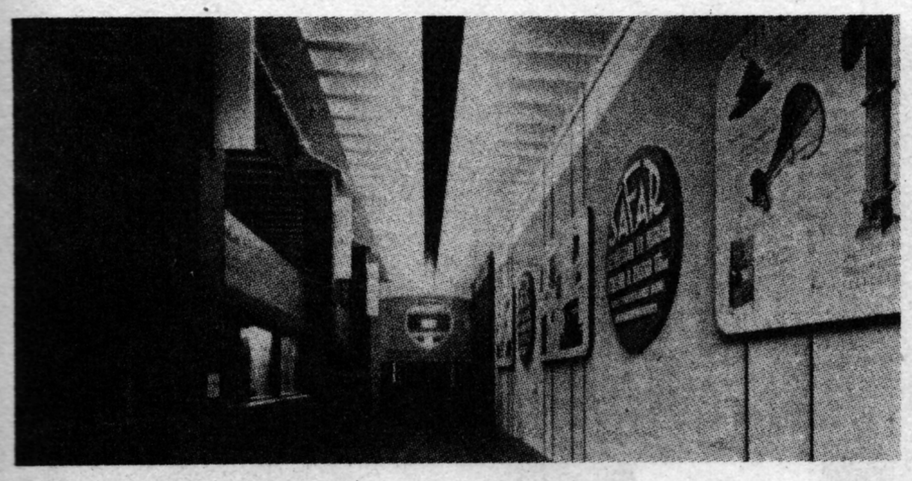

Entrance (Fig. 7, right) and inner hall (Fig. 8, left) of Safar television theatre.

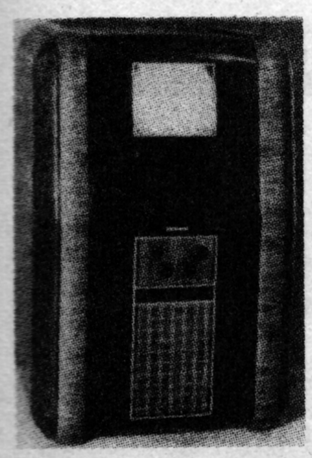

Fig. 15. A television receiver manufactured by Allocchio Bacchini & Co.

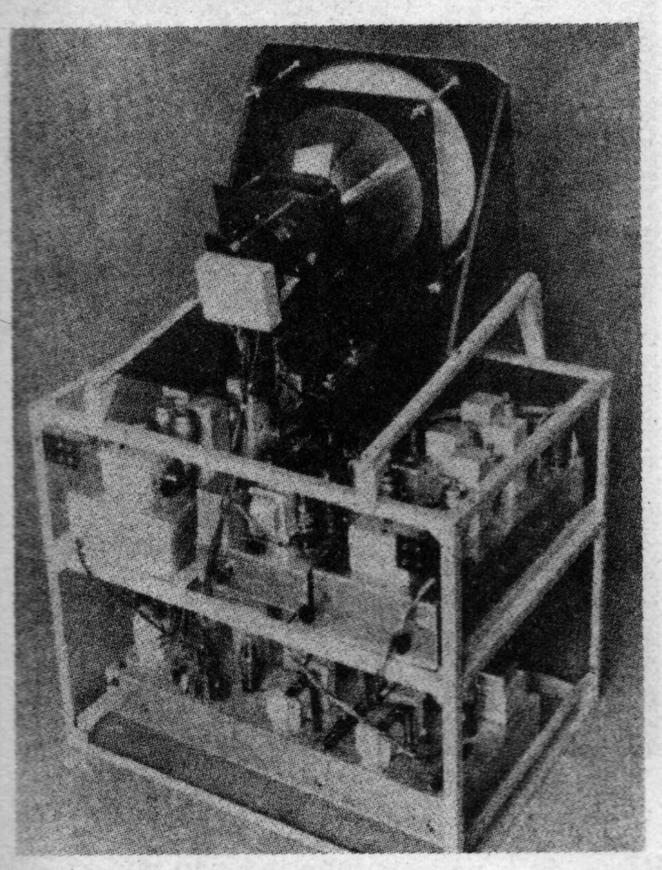

Fig. 16. Rear chassis view of Allocchio Bacchini receiver.

Fig. 18. Television research laboratories at Montrouge, France.

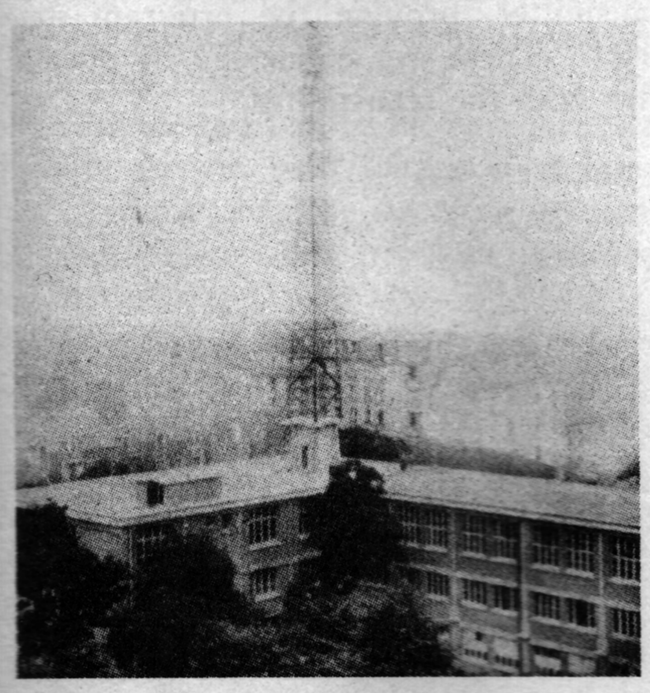

and apparatus is clearly visible through glass partitions from the main hallway.

The stage, shown in Fig. 10, is equipped with adequate lighting arranged to avoid dazzling, double wall and inclined glass for acoustic treatment, and a special air-conditioning system designed for low air velocities for minimum noise. The heart of the cameras is the Telepantoscope tube of Fig. 11, which is of the mosaic type and very similar to its prototype, the iconoscope.

One model of Safar television receiver is shown in Figs. 12 and 13. The cathode-ray tube is of the very short type having a diameter of 16 inches which allows pictures of 10 x 12 inches. Magnetic deflection and focus are used. Normal sound broadcasts may be received with these instruments as well as the television programs.

A high voltage projection tube designed for an anode potential of 40 kv is illustrated in Fig. 14. Persistent development work is being carried on along these lines.

A receiver manufactured by the Italian firm Allocchio Bacchini and Company is illustrated in Figs. 15, 16, and 17.

France

France has rather an impressive series of television experiments dating back to at least 1929. The greater part of this work, if not all, has been conducted under government sponsorship, under the Post Office Department.

At the present time, or at least prior to the advent of war conditions, an imposing program of experimentation is being conducted at the television research center located at Montrouge.

This establishment comprises more than 4000 square meters of laboratory floor space, a television transmitting station, 20 technical men, about 20 technicians and draftsmen, as well as an executive staff of about 40. Through exchange of patents, the staff has a minumum of handicap in technical

Fig. 22. Photo of French television image, 450 lines interlaced, 50 fields.

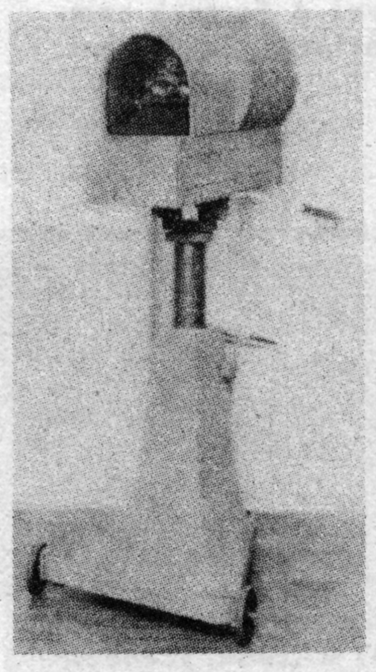

Fig. 20. (Left) French version of mosaic type of electronic television camera.

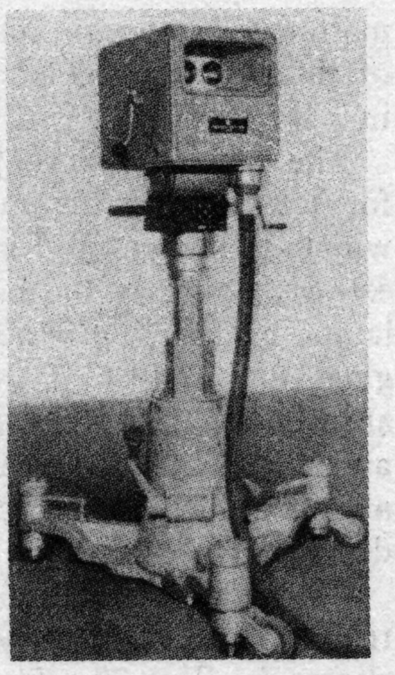

Fig. 23. (Right) A 1939 model of Fernseh A.G. television camera.

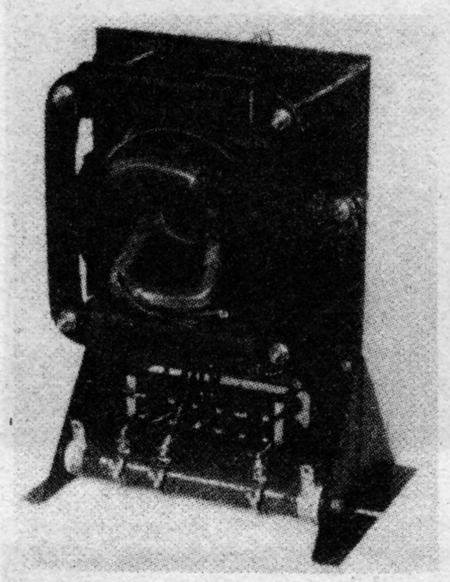

Fig. 17. Magnetic yoke for deflection and focus in receiver of Fig. 15.

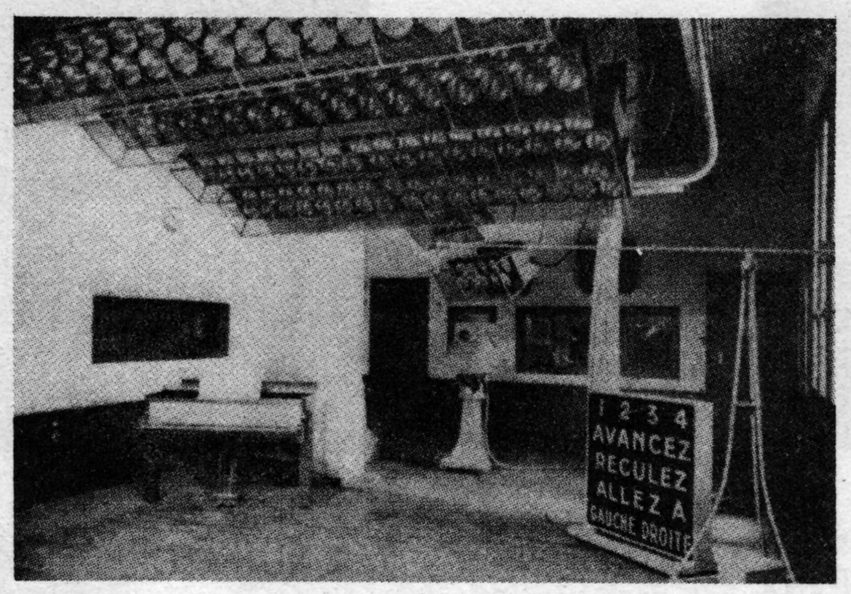

Fig. 19. (Above) Television studios at the Montrouge laboratories.

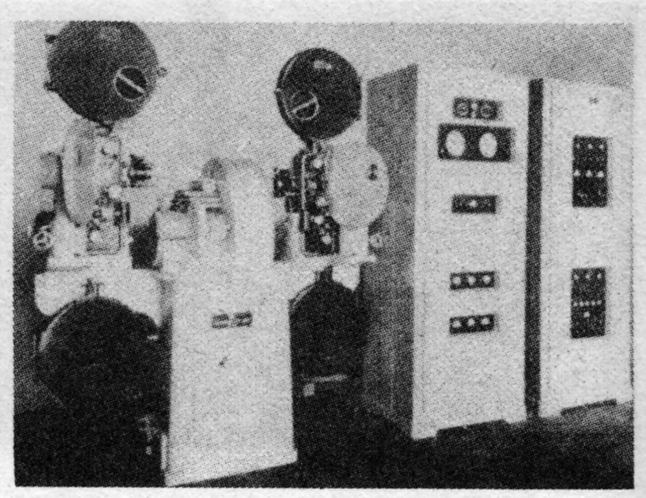

Fig. 28. Twin arrangement of mechanical film scanner (Fernseh A.G.).

Fig. 29. (Below) A 60-80 kv projection type of reproducer (Fernseh).

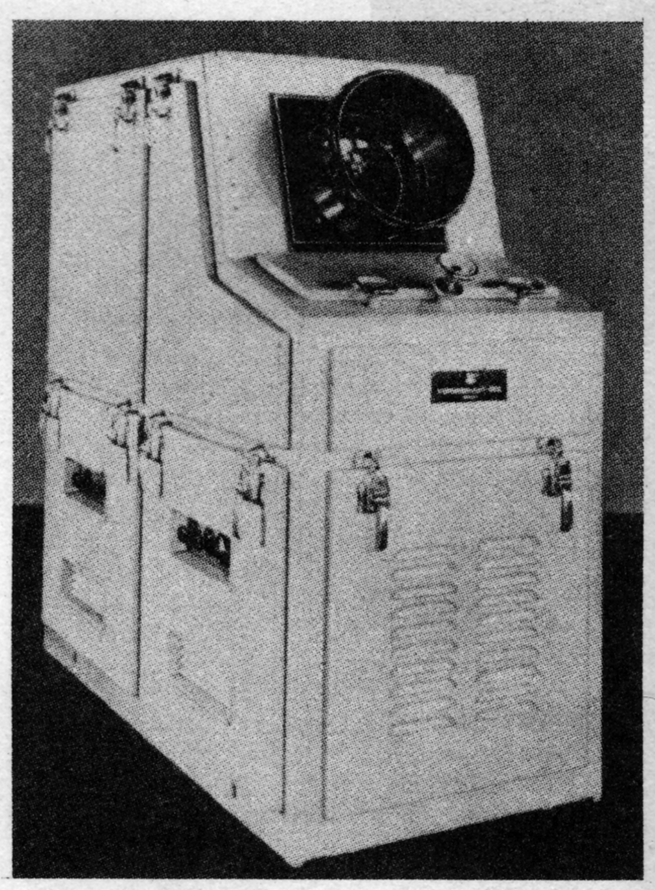

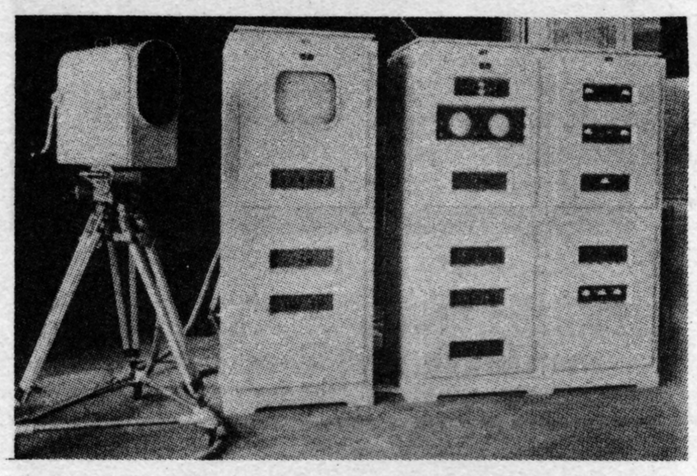

Fig. 24. (Above) A Fernseh camera with associated equipment.

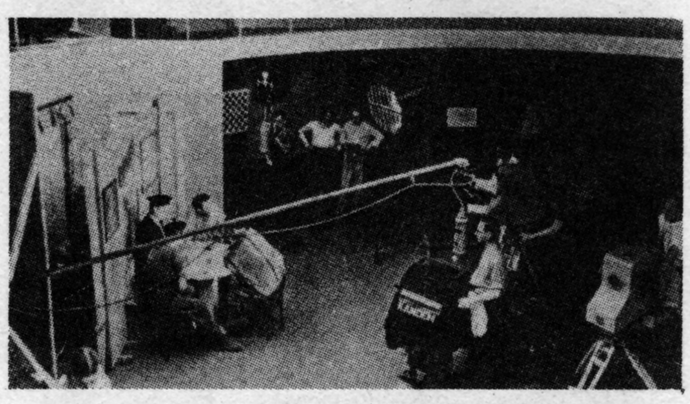

Fig. 25. (Above) A studio scene in Deutschland House (Telefunken).

matters. A photograph of the outside of this Montrouge laboratory is shown in Fig. 18.

The Montrouge center has a studio for television program pickup, part of which is shown in Fig. 19. An interesting feature is the banks of 100-watt lamps overhead. By means of a special glass filter, 80% of the direct heat is absorbed for wavelengths below 8000 angstroms. The 23-foot ceiling height allows the remainder of the heat to be dissipated above.

The studio is equipped with an electronic camera, one type of which is shown in Fig. 20. The mosaic type of translating device is used in France as in most other countries. The studio camera, by means of a wheel mounting, can be moved into an adjoining garden for exterior views. An illumination of 200 lux, corresponding to an overcast sky, is sufficient to provide an acceptable image. Another iconoscope type of camera is used for film scanning.

Complete synchronizing, amplifying, and mixing panels are of course provided. The video modulating signal is amplified without impairment of its amplitude or phase over a band from 25 cycles to 3 mc until its level is sufficient to modulate two push-pull, 3 kw, water-cooled tubes. The peak power output is from 6 to 8 kw.

In a reception hall located near the studio, a projection type of reproducer is located. An anode potential of 40 kv is used (Fig. 21), producing a highly luminous picture 8 x 10 cm which is projected on to a screen by means of a large f 1.4 objective lens. The overall quality of the television circuits, as well as this reproducer, is illustrated in the unretouched photograph image shown in Fig. 22. This picture utilizes 450 lines, interlaced, and 50 fields per second.

The Eiffel Tower television station, in operation since 1937, is one of the most powerful transmitters of its type. When full power is used, 30 kw peak will be fed to the antenna. The antenna is over 1000 feet above the ground and is fed by a special 5-inch coaxial cable that has a total length of about 1250 feet weighing over 12 tons. Two studios, situated about 1½ and 3 miles from the transmitter, provide the program material. These are connected by special lines with the transmitter.

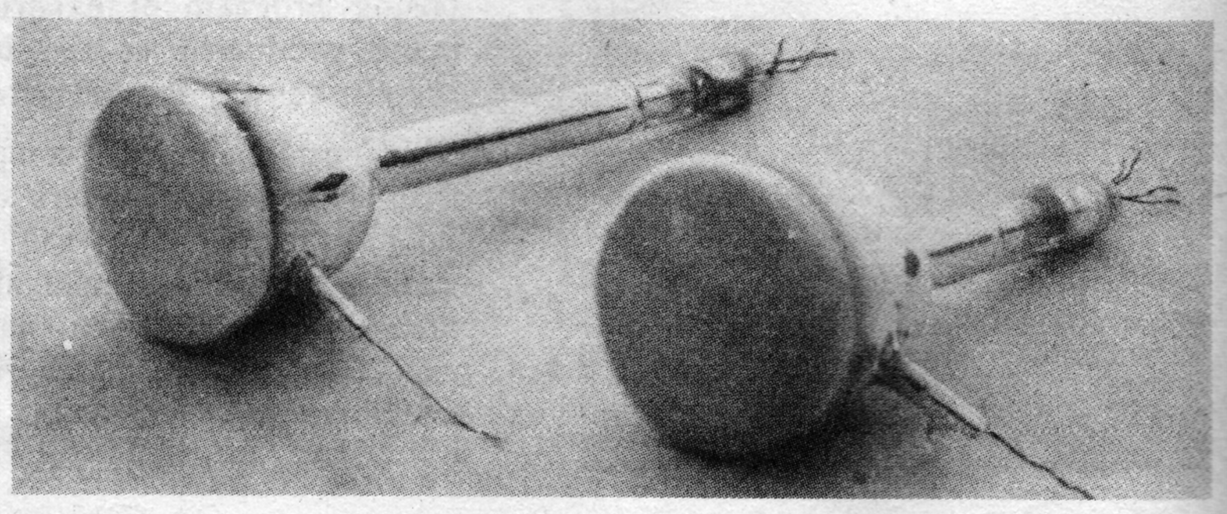

Fig. 21. (Right) French projection tubes for 20- and 40-kv anode potential.

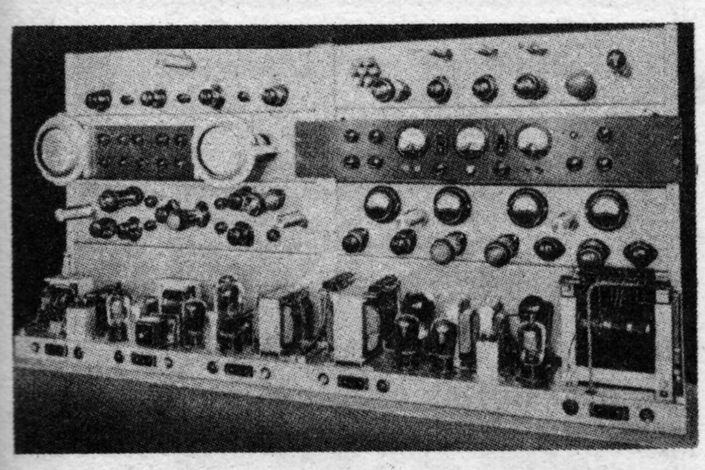

Fig. 30. (Above) An amplifier unit for television signals (Fernseh).

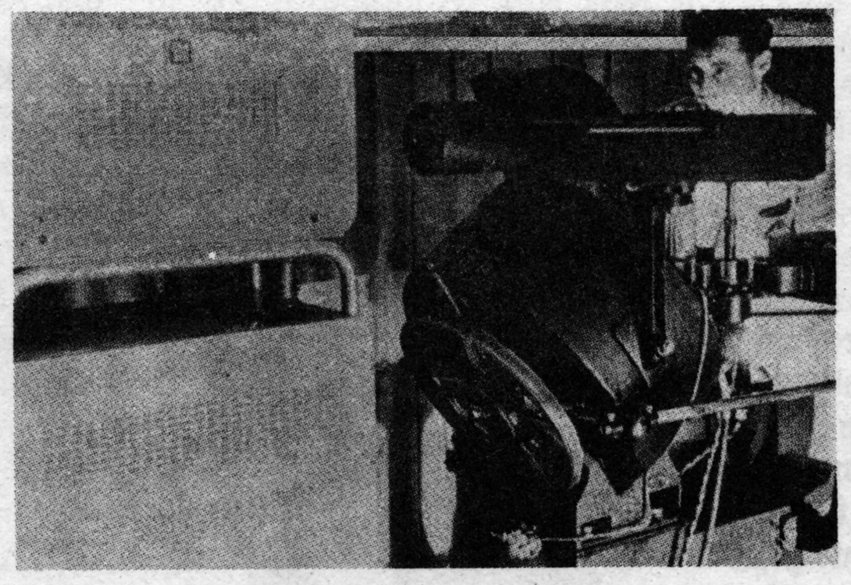

Fig. 27. (Above) Telefunken mechanical film scanner with storage-type pickup tube.

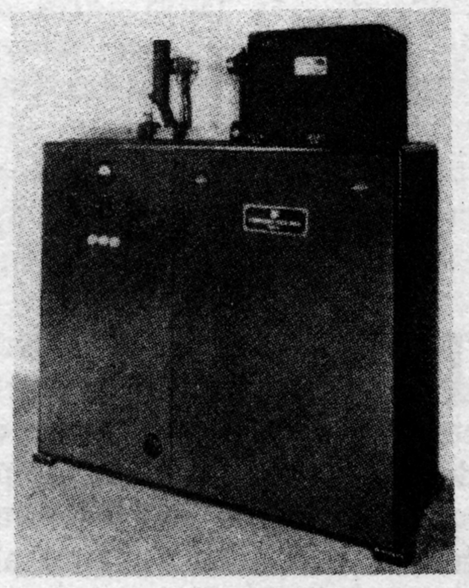

Fig. 26. Diapositive scanner for 24 x 28 mm transparencies (Fernseh).

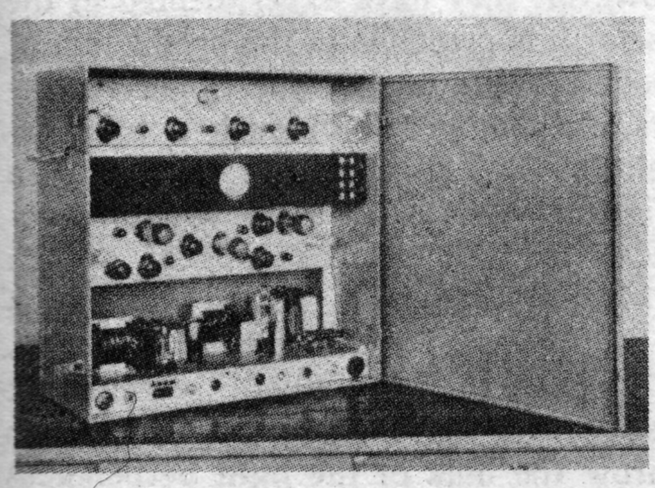

Fig. 31. A portable amplifier for television signals (Fernseh).

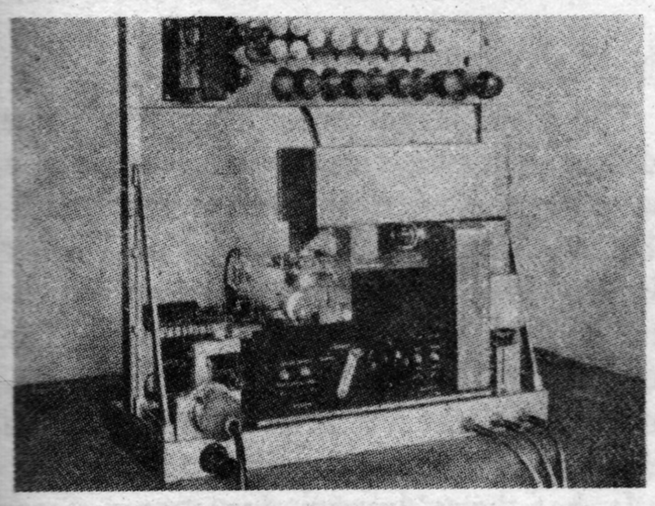

Fig. 32. A mechanical synchronizing impulse generator (Fernseh).

An interesting feature of the final r-f stage is that its plate is grounded, causing its filament and grid circuits to be highly negative. This allows the plate of the modulator to be connected directly to the grid of the modulated stage, eliminating the coupling condenser and grid resistor, and thereby aiding in maintaining the necessary band width.

Germany

Great television activity has characterized Germany's communication industry for years. Many manufacturing companies are interested in the commercialization of visual communication, among them being the Fernseh, Loewe, Lorenz, TE KA DE, and Telefunken companies. Recently a group of such establishments cooperated with the German Reichspost in the production of a standard television receiver as economically as possible in order that the maximum number of receivers be placed in the hands of the people.

An idea of the state of the television art may be obtained from Figs. 23 to 35 inclusive.

Figs. 23 and 24 show two models of television cameras, while the studio scene of Fig. 25 shows still a third. All are basically of the mosaic type. The image dissector type of scanner is represented in the commercial equipment by the still-film scanner of Fig. 26. Film scanning, of course, is very necessary for a sustained service. The need for dependable scanners is met in the devices of Figs. 27 and 28. Both are capable of switching from one film to another without interruption.

Typical of the theatre projectors for television reproduction is the Fernseh A G. high-potential cathode-ray unit of Fig. 29. This unit operates with a second anode potential of from 60 to 80 kv. The objective lens has an aperture of f 1.9. A projected image of approximately 10 x 12 feet can be obtained.

German transmitting apparatus of the transportable type is illustrated by the photographs of Figs. 30, 31, and 32. Fig. 33 shows the amplifier arrangement on the television stage of Deutschsland Hauses. Two cathode-ray tubes allow monitoring of two channels. The sound and vision control desks are shown in Fig. 34. Fig. 35 is a view of the television transmitter of the Reichspost in Berlin. Complete monitoring facilities are likewise provided.

Fig. 34. (Below) Studio sound and vision control desks (Telefunken).

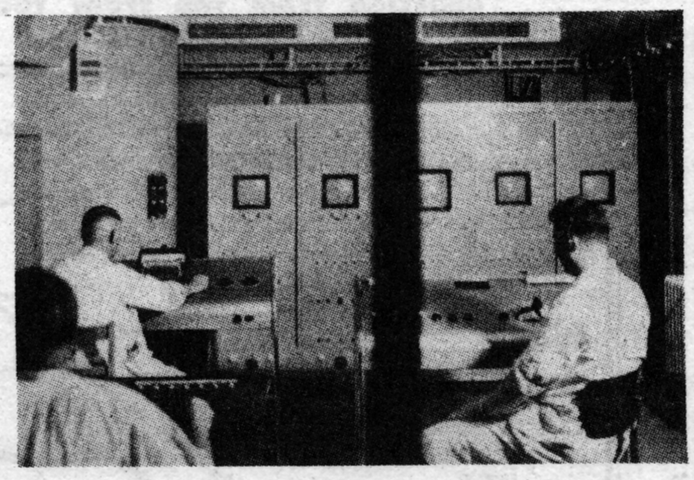

Fig. 33. (Below) Telefunken control panels.

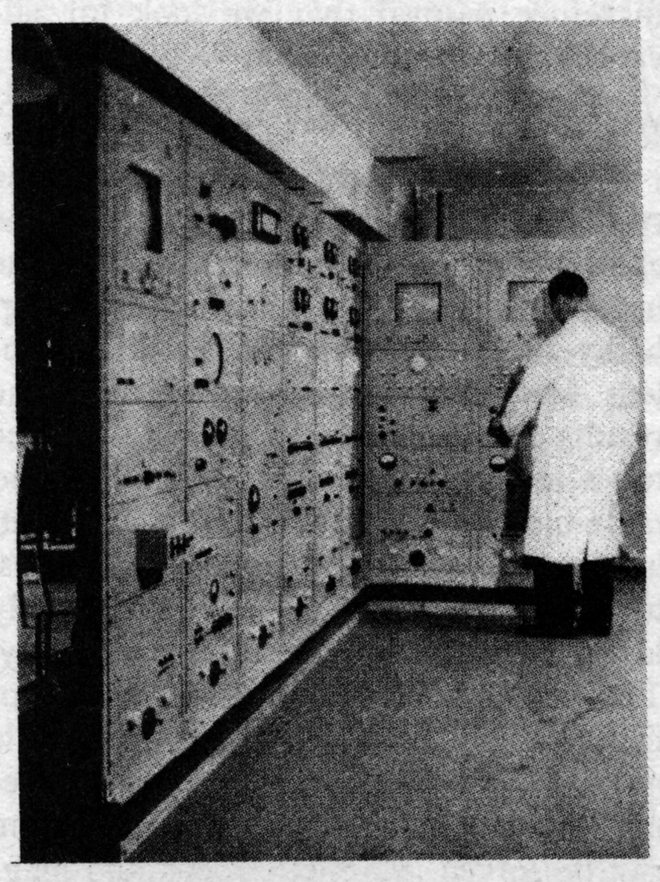

Part X: *Promising Developments*

IT SEEMS particularly appropriate to consider, on the very threshold of commercial television, some of the recent developments which, at the present time, appear to hold much promise for the future. The author claims absolutely no "crystal ball" powers of prophecy, but there are several devices which have recently come into existence which would seem to make their future assured, and which are bound to influence the development of television. There are scores of such promising inventions, but only a few typical ones will be discussed in this, the concluding instalment of this series.

Attaining Larger Images

Many careful studies have been made to determine the optimum size of the image at the receiver. This size is limited on the one hand by the obvious fact that the image must be large enough to be viewed comfortably by the usual family group without eyestrain or crowding. There is a very definite upper limit in image size, however, beyond which it is impractical to go. A ten-foot image in the usual living room would be ridiculous. In between these two extremes is an optimum size which, undoubtedly is larger than the largest images now available on conventional cathode-ray tubes in this country. It is therefore natural that we look for advances in this direction.

Wide-Angle Cathode-Ray Tubes

The first thought in enlarging the received images would be to make the cathode-ray tubes larger. Keeping the usual proportions results in very long, bulky tubes. Some work on this problem has been done abroad with the results such as pictured in Fig. 1. The tubes are made short enough to fit into table-model cabinets horizontally, yet, by the use of larger deflection angles, to obtain an image that is considerably larger than those obtained previously. The problem of retaining suitable spot focus out to the edge of the screen is no small one, and yet the results reported indicate that even this problem can be solved. Magnetic focus and magnetic deflection are invariably used in this type of tube. This type of tube would apparently hold much promise for the less expensive sets which must meet the inevitable demand for larger images.

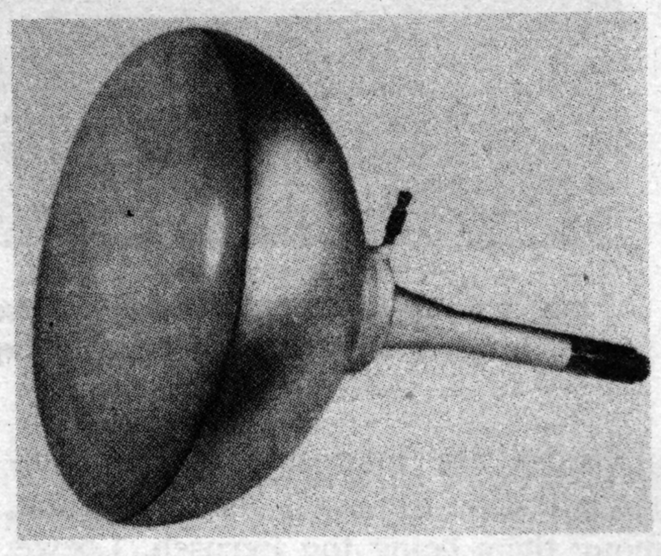

Fig. 1. Italian (Safar) tube for television reception. Magnetic deflection and focusing are used.

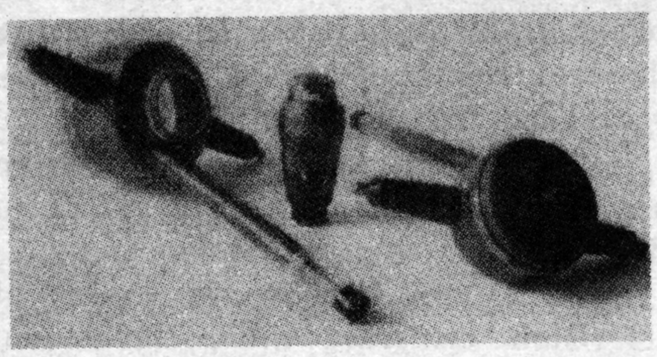

Fig. 2. (Above) Two views of small cathode-ray projection tube . . . compare with vacuum tube at center. (Fernseh)

Small Projection Tubes

Demonstrations have been given in this country of large cathode-ray arrangements using second anode potentials of 40 kilovolts or more, which produce a small image having an intensity suitable for theatre projection by means of a conventional optical system. These tubes will probably find a definite service for presentation of television images to large audiences. In Germany, however, they have experimented in the use of this principle in the production of modest sized images for home receivers. A photograph of such a tube developed by Fernseh A. G. is shown in Fig. 2. A polished glass window provides for the external optical system which enlarges the image and casts it onto a rear-projection type of screen. To conserve light, these screens are usually of the directional type which throw the bulk of the light perpendicular to the plane of the screen toward the observers. A folding screen of a size comparable to a home motion picture screen could be built into the receiver.

Light Relay Tubes

The ideal large-screen receiver is one having some device which controls a local light source, thus eliminating fluorescent screen deterioration and other similar effects influencing, in an expensive way, the life of the device. The solution of this problem might be forthcoming in a very interesting form of crystal light relay.

It has been known for many years that certain crystals would rotate the

Fig. 3. Large-screen television light relay which depends upon the fact that certain crystals rotate the plane of polarization of light passing through them an amount depending upon the electrostatic potential existing between the faces of the crystal. Secondary emission from the front face builds up the necessary charges.

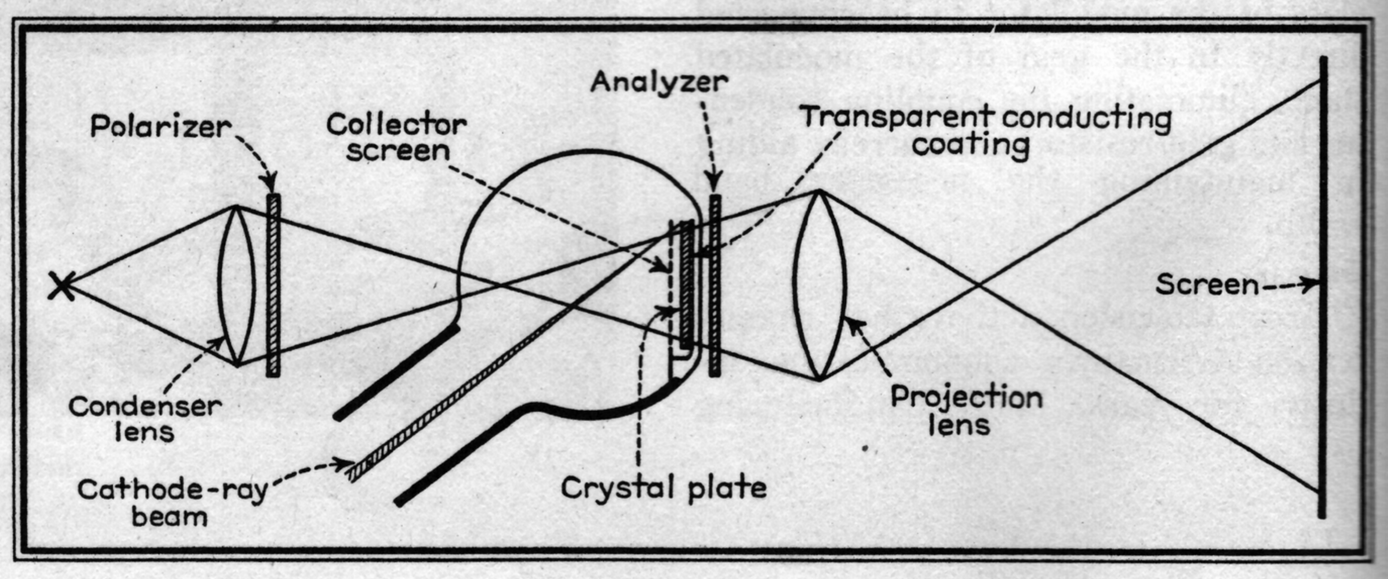

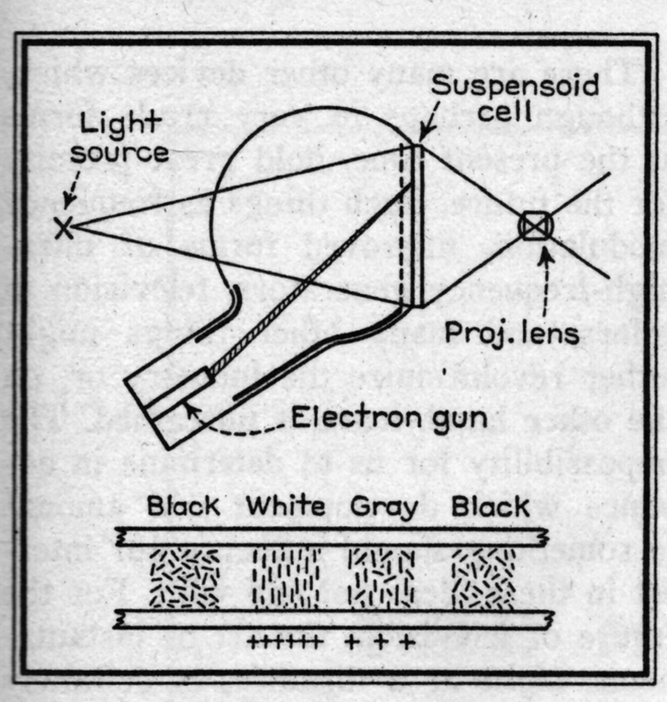

Fig. 4. Sketch of suspensoid cell utilizing electro-mechanical effect of colloidal graphite as a light relay.

plane of polarization of light passing through them when an electric field was present parallel to the direction of light travel. Later considerable work was done[1] in investigating the magnitude of electrostatic fields that could be produced between the faces of a crystal by the bombardment of one face by an electron beam with the resulting secondary emission from the face. As the crystal, such as zincblend[2], is an insulator, the high electrostatic charge due to the loss of secondary electrons remains on the spot that was bombarded by the beam.

Fig. 3 shows one of several possible arrangements for utilizing the electro-optical effects of these crystals. The zincblend plate having a transparent conducting coating on the rear and a very fine screen some distance from the front face of the crystal is mounted within an evacuated envelope which also houses a conventional electron gun and deflection system trained upon the crystal plate. The high velocity electrons comprising the electron beam pass through the meshes of the screen and strike the crystal with a velocity dependent upon the second anode potential. This electron energy is imparted to the crystal surface resulting in a stream of secondary electrons being knocked off. These are immediately attracted to the screen which, with the transparent conducting coating are bonded to the coating within the tube. This loss of electrons from the spot being bombarded will result in a high charge between the two faces of the crystal. This effect is a local one because the charges cannot leak off due to the high insulating properties of the crystal. The light from the light source passes through two polarizing discs crossed so that no light normally passes through. At this spot under bombardment, however, the potential gradient between the two faces of the crystal causes the plane of polarization of the light to be rotated, resulting in light being allowed to pass through the spot being bombarded, the amount of light depending upon the density of the electrons in the beam. The beam density can be very easily controlled by the control-grid potential of the electron gun which, of course, would be the video signal from the television receiver. In this manner the electron beam in-

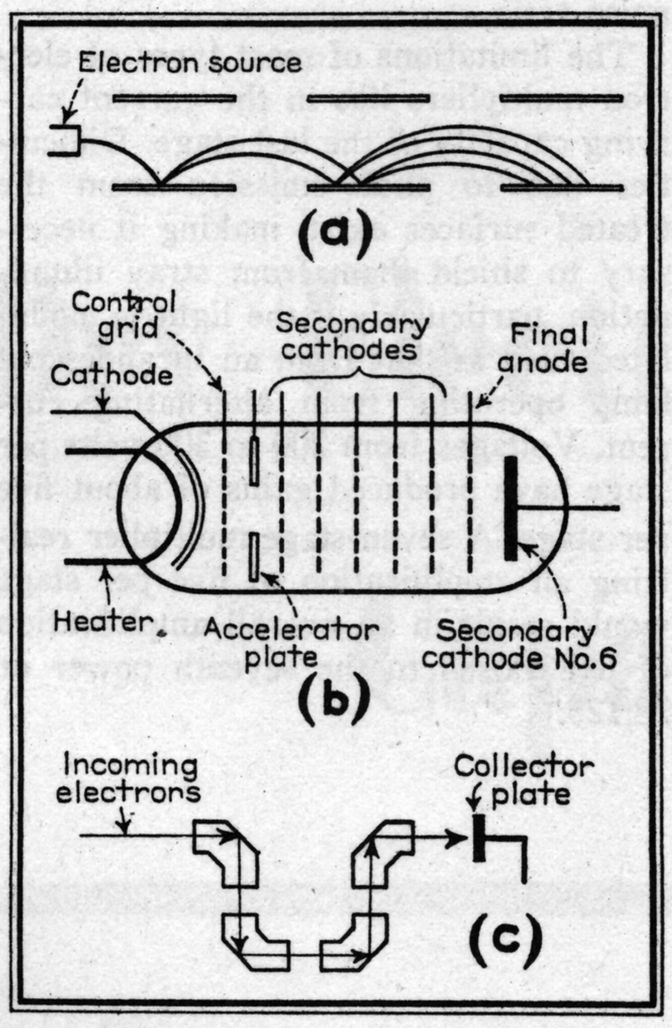

Fig. 5. Sketches of three common types of electron multipliers. (a) plate type, (b) screen type, (c) tubular type.

tensity would vary from picture element to picture element along each line and from line to line, resulting in an electric potential picture being set up over the face of the crystal. This picture, through the medium of polarization, allows the light from the projection lamp to throw an enlarged image upon the screen.

The potential distributions over the face of the crystal at the end of the frame must be equalized to make ready for the next frame or field. This process may be carried out in a number of ways, one of which would be spraying the crystal plate with a beam of slow electrons which would supply electrons to the face of the crystal, discharging the picture elements and preparing it for another frame.

There are many other arrangements of this particular type of light relay and there are several other types[3] which hold out some promise. One other type that will be mentioned is the colloidal graphite light relay which has not yet been developed to the point of the zincblend relay. Colloidal graphite is a suspension of highly purified graphite particles, the flakes of which are relatively flat and thin. Normally these flakes are arranged at random rendering the liquid opaque. If an electric field is applied between two faces of a vessel containing colloidal graphite, the flakes tend to line up with the field, making the liquid semi-transparent. The greater the potential applied, the more transparent the liquid becomes. When the potential is removed, the flakes return to their random positions at a speed dependent upon the Brownian motion of the liquid. This can be adjusted to be approximately 1/60 second so that at the expiration of one field, the relay is ready for the next. The potential distribution could possibly be obtained in a manner similar to that of the zincblend relay arranged as in Fig. 4.

This resume by no means exhausts the possibilities of this type of light relay, but, as intended, it merely introduces the subject to readers interested in television, as it seems quite probable that cells similar to these will be common in the future.

Electron Multipliers

Another device that promises great things in the communication field is the electron multiplier. Research laboratories throughout the world have been interested in developing this infant of the electronic family. The basic principle underlying electron multiplication is that of secondary emission. A moderately fast moving electron colliding with a specially treated surface may knock off one to five other electrons, the exact number being determined by the electron speed, the type of surface, and other factors.

Fig. 6. (Below) An RCA electron multiplier. Electron paths made visible by introduction of gas.

The multiplier of Fig. 5-a utilizes both an electromagnetic and electrostatic field to cause the electrons to stay in the proper path. The successive treated plates are at progressively higher potentials, attracting the electrons liberated from the preceding plate. An electromagnetic field is adjusted until its strength is sufficient to bend the electron beam so that it hits the plate in the proper place. The photograph of Fig. 6 shows a demonstration multiplier of this type in action. The electron paths are made visible by the introduction of a small amount of gas into the tube. The necessity of a magnetic system would appear to be a disadvantage.

The screen type multiplier, Fig. 5-b requires an electric potential source for the acceleration of the electrons, and sometimes a radial magnetic field is used to keep the electrons in the center of the tube. The screens, some of which are composed of 10,000 meshes per square centimeter, are treated for high secondary emission and it is claimed that about half the projected area of this screen is open space. Gains up to about a million have been attained with this type of multiplier. Tubes of this type[4] with either a thermionic or a photo cathode were recently placed upon the market in England. Mutual conductances of the order of 50,000 micromhos are attainable with these tubes.

The multiplier of Fig. 5-c relies upon the careful design of the "elbows" for the proper electrostatic focusing of the electrons in their travel from one stage to the other. This is necessary for the emitted electrons have more or less random velocities and a proper electrostatic field is necessary to guide them to the next stage. The Farnsworth Image Dissector utilizes a multiplier of this general type to provide sufficient signal with a satisfactory signal-to-noise ratio.

The limitations of most types of electron multipliers lies in the current carrying capacity of the last stage. Difficulties due to photo-emission from the treated surfaces exist, making it necessary to shield them from stray illumination, particularly if the light is modulated such as that from an incandescent lamp operating from alternating current. Voltages from 200 to 300 volts per stage have produced gains of about five per stage. A seven-stage multiplier realizing an amplification of five per stage would result in an overall amplification of five raised to the seventh power or 78,125.

There are many other devices which, although perhaps in very crude forms at the present time, hold great promise for the future. Such things as frequency modulation, improved forms of ultra-high-frequency generators, television in colors, and many other things might either revolutionize the industry or, on the other hand, leave it unscathed. The impossibility for us to determine in advance which development will amount to something should influence our interest in these ideas not one whit. For the future of television, the art of instantaneous sight at a distance, is definitely assured and its cultural effect on people will be greater than we now realize.

References

1. Von Ardenne, "Methoden und Anordnungen zur Speicherung beim Fernsehemfang," *TFT*, Bd. 27. November, 1938, pp. 518-524.
2. Schramm, "Uber den electrooptischen Effekt an Zinkblende," *Annalen der Physik* (5) 25. S. 309, 1936.
3. Rosenthal, "The Skiatron," *Electronics and Television and Short Wave World*, February, 1940, pp. 52-55.
4. "The Augetron and Its Application," *Electronics and Television and Short Wave World*, January, 1940, pp. 17-19.

• Section 9

THE MYE TECHNICAL MANUAL

DC Dry Electrolytic Capacitors

P.R. MALLORY & CO. Inc.
MALLORY

D.C. DRY ELECTROLYTIC CAPACITORS

● A condenser, or as it is more rightly termed, a capacitor, consists of two conducting electrodes separated by a nonconducting medium called the dielectric.

A condenser is an electrical device capable of storing a charge of electricity when voltage is applied to its terminals. Applying direct current to the condenser establishes a static charge in the dielectric. The static charge rises until the voltage is equal to the source voltage. When this point is reached the source voltage is opposed by the voltage of the electro-static charge in the condenser, and there can be no further flow of current unless the source voltage either rises or falls.

If the source voltage rises above the electro-static voltage, additional current will flow through the condenser until the electro-static voltage again equals the applied voltage.

If the source voltage falls below the voltage of the established electro-static charge, current will flow from the condenser into the circuit until the electro-static voltage again equals the applied voltage.

Capacity of a Condenser

Capacity is the term applied to a condenser and indicates the ratio of the quantity of the electro-static charge, to the voltage. The quantity of the charge is expressed in coulombs, and usually stated: $Q = C \times V$; Where Q is coulombs, C is capacity in farads, and V is voltage. This gives us the fundamentals for stating that the capacity is equal to the quantity divided by the voltage, or $C = \frac{Q}{V}$

The capacity of a condenser is dependent upon:

First—Area of the plates.

Second—Thickness of the dielectric.

Third—Dielectric Constant.

The Dielectric Constant of a material is the ratio of the capacity of a condenser using this material, to the capacity of a condenser of equal plate area, but using air as the dielectric. The usual formula for Dielectric Constant is $K = \frac{Cs}{Ca}$

Where Cs is the capacity with the dielectric in question, Ca is the capacity when using air as the dielectric, and K is the Constant.

The Dielectric Constant of a material is not constant in value, but varies with the frequency of the applied current, moisture content, temperature, voltage applied, and other factors.

Electrolytic Condensers

Condensers are classified according to the nature of the dielectric medium employed in their construction. Thus —an oil condenser is one in which oil is used as the dielectric; an air condenser is one in which air is used as the dielectric; a paper condenser is one in which paper is used as the dielectric.

From the description of the terminology applied to condensers, one might suppose that the electrolytic condenser uses an electrolyte as the dielectric. This supposition, however, is inaccurate in that the electrolyte used in the electrolytic condenser is not the actual dielectric material but is one of the conducting electrodes.

The dielectric material, or medium, in the electrolytic condenser consists of an extremely thin oxide film which is formed on the surface of the condenser anode or positive plate.

The nature and composition of the film which forms the dielectric in an electrolytic condenser is not definitely known. The formation and action of this film is understood and can be explained in rather simple terms.

It is a peculiar characteristic of aluminum and a few other metals that when they are immersed in certain electrolytic solutions, or electrolytes, and a current passed through the metal and electrolyte to another electrode, a non-conducting film will be formed on the metal, which will oppose the flow of current.

Thus, if we take two pieces of aluminum and immerse them in a suitable electrolyte, and pass a current from one plate to the other, the current will be very high when first applied, but it will taper off until there is little, if any, current flowing in the circuit. This is termed "forming," which means the establishment of a film upon the surface of one of the plates. In the case of aluminum, the film is formed on that plate to which the positive wire is connected.

The formation of the film on the plate retards the flow of current. If the polarity is reversed, i.e., the polarity of the source voltage, current will flow. Thus we see that the film acts as an insulator only as long as we maintain the same polarity as was used in forming.

The dielectric constant of the film in an electrolytic condenser varies with the formation voltage. Thus—for equal plate area, a condenser formed at low voltage will have a higher capacity than one of the same area formed at high voltage.

Another characteristic of the electrolytic condenser film is that it is dependent upon the composition of the electrolyte, inasmuch as this determines the maximum voltage at which the film can be formed or maintained. If an electrolyte is said to be a 400 volt electrolyte, it means that if more than 400 volts is applied to a condenser using this electrolyte, the film will be punctured though not necessarily damaged. This is the reason why, when electrolytic condensers are rated at 525 volts surge, it means that 525 volts is the maximum momentary voltage which can be applied to the plates without puncturing the dielectric film.

A constant D.C. voltage aids in maintaining the dielectric film, and because the film is not perfect, there will be a small amount of current continuously flowing through the condenser. This current is called the leakage current,

and for a good electrolytic condenser, it is very small. The value of the leakage current is determined by the condition of the film on the plate and the length of time it has been without a polarizing voltage.

Dry Electrolytic Condensers

In general, there are two types of electrolytic condensers: the wet type, which uses a liquid electrolyte, and the dry type, which uses a paste electrolyte.

The dry electrolytic condenser possesses many advantages. They will not spill or leak, may be mounted in any position, and in any type container.

The improved performance, smaller size, better tone, and lower cost of modern radio receivers is due in a large part to the advent of the modern dry electrolytic capacitors. Prior to their availability, filtering was accomplished by the use of paper dielectric capacitors.

Microfarad for microfarad, paper dielectric condensers are far more bulky and expensive than dry electrolytic capacitors. In early receivers, filtering was quite generally accomplished by using a two-stage filter consisting of either two iron core chokes, or one choke and the speaker field. The capacitors used ranged from one mfd. to four mfd.

By using large size chokes it is possible to obtain fairly good filtering in a two-stage filter with small values of capacity. However, even though the design achieves a low hum level, the resonant frequency of the filter may extend up into the useable audio range. When this occurs, motor-boating and fluttering will occur in the receiver unless certain precautions are taken, such as—

1. Restricting the low frequency response of the amplifier. This works but the reproduction sounds "tinny" from the lack of bass frequencies.

2. The use of isolating filters for the individual audio stages. This latter system works and permits extended low frequency response, but results in further complexity of design, added cost and weight.

The availability of modern dry electrolytic filter capacitors revolutionized filter circuits. Large values of capacity—10 mfd., 20 mfd., or even 40 mfd. and more, in small, compact containers—permitted simplified one-section filter systems with a very low common impedance eliminating hum, motor-boating, and instability problems, even with a very wide range audio response. It is little wonder then, that the use of dry electrolytic filter capacitors has become universal for the industry.

Electrolytic Capacitor Uses

Dry electrolytic capacitors provide large values of capacity in relatively small dimensions, and are the most economical type for many applications.

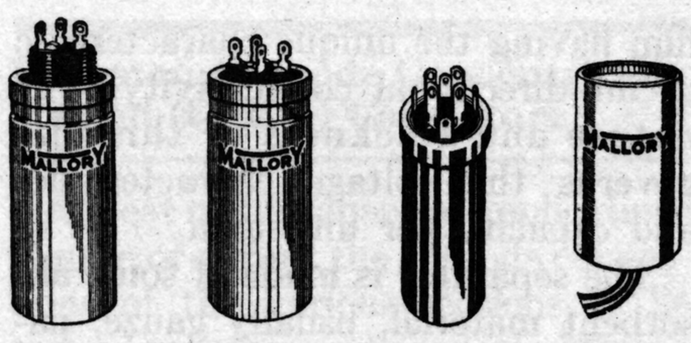

FIG. 1—*Typical Dry Electrolytic Capacitors*

At present they are obtainable for continuous operation on direct current and for use on alternating current with certain service restrictions.

Typical direct current applications are:

1. D.C. filter networks.
2. Audio frequency by-pass.
3. Voltage doubling.
4. Electrical welding.
5. All polarized circuits with or without limited A.C. components.

Alternating current applications are usually restricted to intermittent duty as in starting service on capacitor start induction motors. Discussion of this form of application will be treated in subsequent engineering data to be released.

Internal Mechanical Construction of Dry Electrolytic Capacitors

General

In general, a dry electrolytic capacitor consists of an anode, a cathode foil and a separator containing an electrolyte, all of which are wound into a roll and provided with means for electrical connection, housing and mounting.

The anode, usually of aluminum, is subjected to a special electro-chemical forming process which completely covers it with an extremely thin oxide

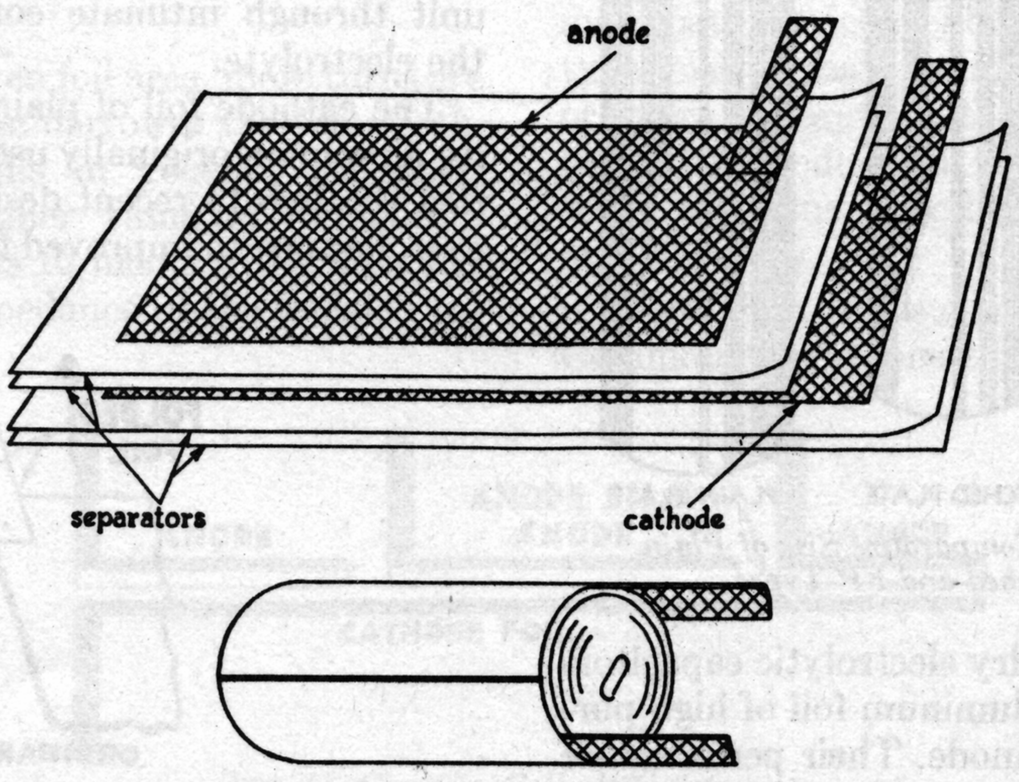

FIG. 2—*Capacitor Cartridge Construction*

film having the unique characteristic of uni-directional conductivity. The nature and thickness of this film governs the voltage characteristics and capacity per unit area.

The separator is made of some absorbent material, usually gauze, paper, non-fibrous cellulose or various combinations of these, and serves to hold the electrolyte in position and keep the anode and cathode foil from making physical contact.

The electrolyte consists of a chemical solution essentially similar to a dry paste and serves as the cathode electrode. In addition, it tends to maintain the film on the anode.

The cathode foil, generally aluminum, is usually unformed and acts merely as a means of making contact to the electrolyte, which is the cathode of the capacitor.

Dependable capacitors giving long and satisfactory service in the field are easily produced where efficient up-to-date equipment is available. Close attention to design and constructional details by experienced engineering and production personnel assures excellent electrical characteristics, stabilized moisture content and ability to withstand high surge voltage conditions.

Anode Electrode

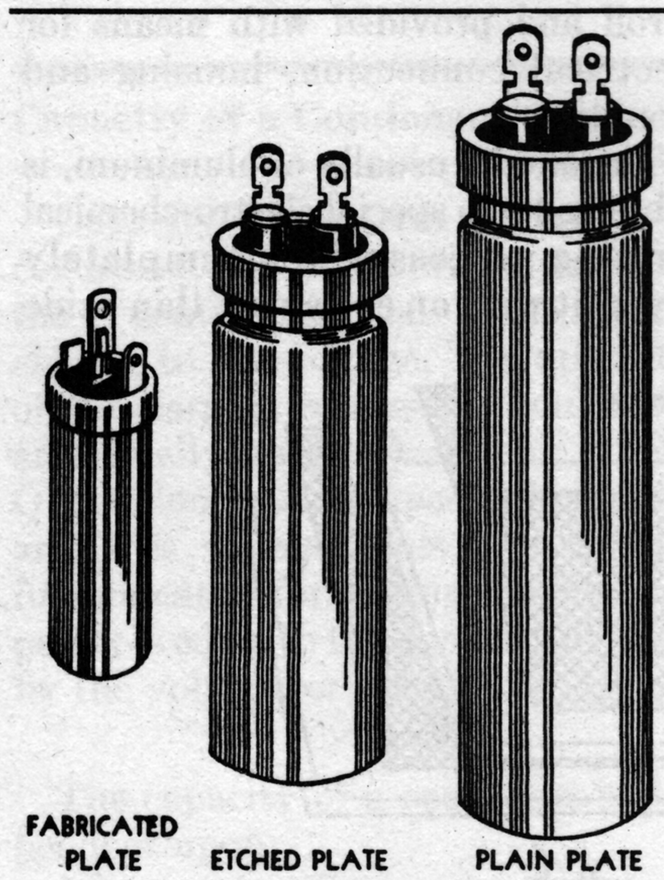

FIG. 3—*Comparative Size of Plain, Etched and FP Types*

The first dry electrolytic capacitors used plain aluminum foil of high purity for the anode. Their performance in the field was, on the average, highly satisfactory, and their subsequent replacement arose from the ever-present requirement for radio components, namely, more efficient use of available space in equipment designs.

As a result, an etching process was developed for roughening the surface of the aluminum foil, thereby increasing its effective area. This increased area produced capacity values ranging from 2.75 to 1 at high voltages, to roughly 7 to 1 at low voltages, as compared to the capacity of plain aluminum foil units.

In the interests of greater efficiency, the Mallory Co. developed a new anode material, neither plain nor etched foil, in the type FP* capacitor. The term FP refers to the Fabricated Plate anode material which is made by depositing small particles of molten high purity aluminum on a suitable carrier. The introduction of this construction in the early part of 1938 provided a further decrease in capacitor physical size. The FP anode material has a normal capacity of 10 to 1 as compared to plain aluminum foil. Ratios of 20 to 1, or higher, are possible under certain conditions, but are not in use at present. Fig. 3 illustrates the representative physical size of a given capacity value in the three constructions.

Cathode Foil

It should be understood that the electrolyte itself is the cathode in an electrolytic capacitor. The so-called cathode foil is used merely to lower the equivalent series resistance of the unit through intimate contact with the electrolyte.

The cathode foil of plain high purity aluminum originally used, has carried through to recent designs. However, because of improved tab connections in the FP construction, its cathode foil does not need to be as thick as previously used.

Internal Connections

The internal connection to the anode and cathode foils, in the case of the plain or etched plate units, is usually made by cutting and folding a narrow piece of foil in such a manner as to form a tab which protrudes from the finished roll. This tab eventually connects to the external lug or lead by means of a rivet. Great care must be taken to protect this junction from corrosion. Fig. 4 illustrates the method of folding the tabs.

The danger of corrosion at the riveted junction, as mentioned above, lies in the fact that it must be protected from the electrolyte, since dissimilar metals, i.e. aluminum (plate) and copper (lead wire), are joined by the rivet.

Where a number of tabs protrude from the roll within a small area, as in some concentrically wound units, it is frequently difficult to properly insulate these tabs from each other, with a possibility of future trouble in the field.

A new method of making connection to the anode is utilized in the FP capacitor construction. (See Fig. 4.) The anode tabs are formed as an integral part of the anode during the fabrication of the anode material and are of extremely heavy aluminum strip rather than foil tabs. The heavy cross section of the tab strip and its small surface area will withstand corrosion, if present, far better than the foil type.

The cathode tabs used in the FP capacitors are cold welded to the cathode foil by a special piercing and extruding process. Like the new anode tabs, they are of heavy strip.

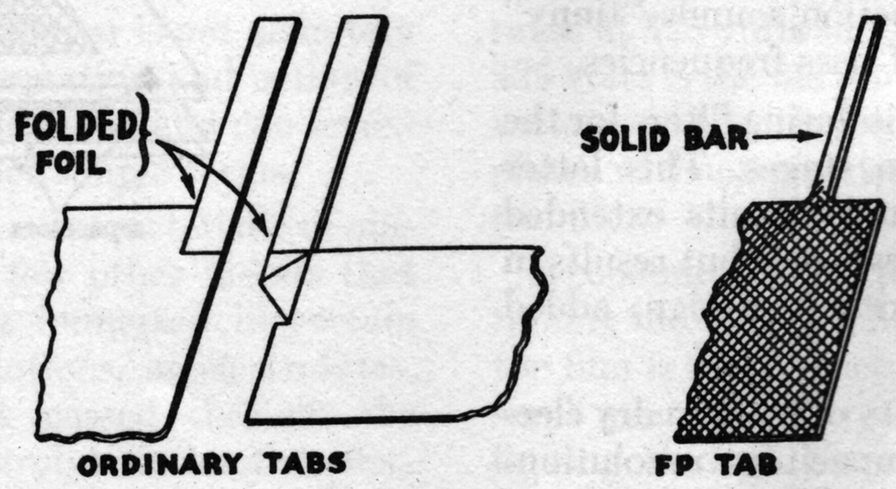

FIG. 4—*Various Anode Tab Constructions*

*Trade Mark Reg. U.S. Pat. Off.

A great advantage of the FP tab construction is the complete elimination of rivets or joints of any kind inside of the capacitor container.

The tab protrudes through a special seal and makes contact with the final terminal outside of the container as described more fully under the paragraph devoted to "External Mechanical Construction."

Separator

This is the material used to hold the electrolyte, and mechanically separate the anode from the cathode foil from which feature it derives its name. It must be absorbent and free from any impurities that might cause corrosion. Special types of gauze, paper and cellophane have been utilized for this purpose.

From a surge voltage standpoint, the separator material also acts as a barrier retarding the mixture of oxygen and hydrogen gases which might be generated if the capacitor is subjected to voltage overloads. Naturally, the density of the separator material is an important factor and cellophane, properly processed, has had a decided advantage in this regard.

Primarily, gauze was used exclusively as a separator material. However, its open network structure, which permitted frequent gas pressure failures, caused it to lose popularity in favor of paper separators. Paper also had the advantage of permitting smaller physical capacitor size due to the difference in thickness of the separator material.

Cellophane separators proved to be a valuable addition to conventional separator materials. The use of cellophane, however, has been limited to certain severe applications due to the relatively high cost and difficulty in obtaining the specially processed material. Increased use of cellophane has lowered the material cost substantially, resulting in a more general application.

Proportion of Section

A perfectly round section, the length of which is not less than twice the diameter has the best electrical characteristics.

Where several anode tabs emerge from the end of a concentrically wound section it may be necessary to increase the diameter and shorten the length of the unit. This procedure allows more space between tabs and eliminates the possibility of shorted tabs in the field.

Generally speaking, the manufacturing of flat capacitor sections is not considered the best practice since pressure may damage the anode film during the squeezing process. Where gauze separators were used, such pressure often embossed the foil to such an extent that a short circuit occurred. Very thin sections have an added disadvantage in that future expansion may cause voids between the electrolyte and the electrodes, with a resultant loss of capacity and increase in series resistance.

For a given foil area, more turns are required the narrower the foil width. Narrow foils in general, therefore, have a higher value of inductance which tends to increase the high frequency impedance of the finished capacitor.

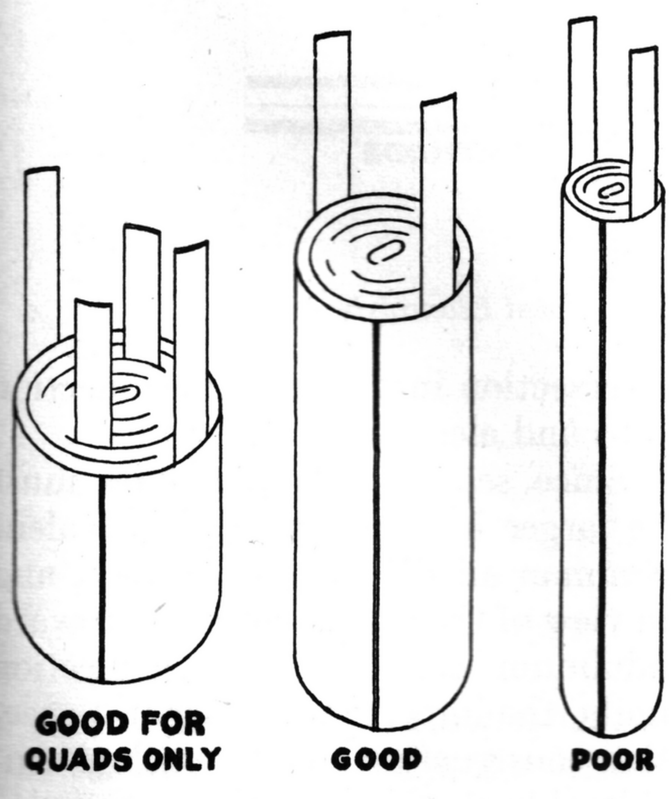

FIG. 5—*Capacitor Cartridge Proportion*

Common Cathode Concentrically Wound (CCCW) Capacitors

A great many capacitor applications require or permit the cathode connections of the various sections to be ganged together and connected to one common point in the circuit.

Since the electrolyte itself is the cathode in dry electrolytic capacitors, it is obvious that several anodes could be included in one common electrolyte, automatically furnishing an internal common cathode connection, culminating in a single exterior terminal.

In actual production, this type of unit consists of one long cathode foil and the required number of anodes laid end to end and parallel to it, all of which together with the proper separators are rolled into one complete unit. Each anode is provided with a terminal and care is taken, of course, to see that a sufficient space is allowed between the adjacent anode ends to prevent short circuiting at this point.

Capacitors so constructed are entirely satisfactory electrically and mechanically. They may be secured in different combinations of capacities and voltages, and require less space than their equivalent in individual capacitor units. These capacitors are marked "CCCW."

Common Anode Concentrically Wound (CACW) Capacitors

From a general construction standpoint, this type is similar to the common cathode concentrically wound type, except that one anode and two or more separate cathode foils are used. Its production, however, presents problems affecting its quality and efficiency.

More than a casual discussion of Common Anode construction is given

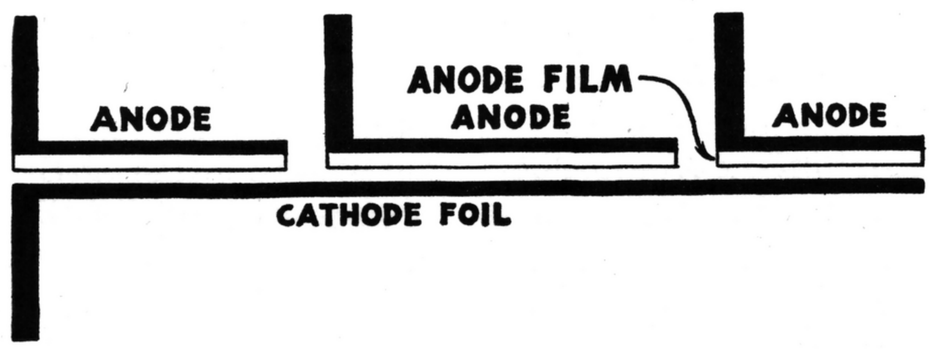

FIG. 6—*Common Cathode Construction*

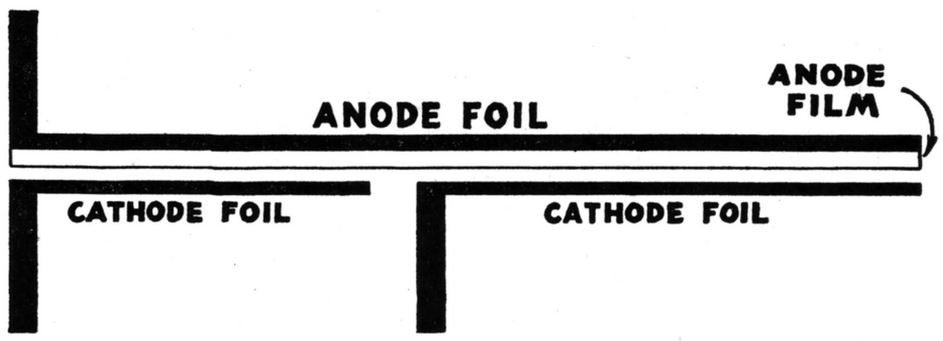

FIG. 7—*Common Anode with Unformed Cathodes*

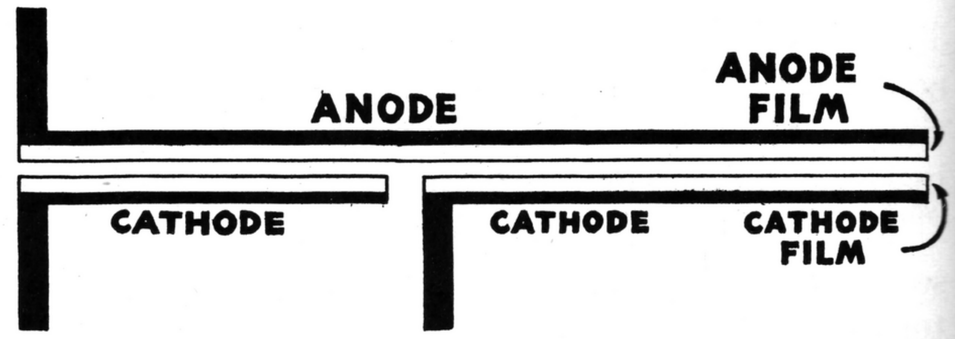

FIG. 8—*Common Anode with Formed Cathodes*

here since the difficulty of manufacture is not generally understood.

Since it is impossible to electrically form one single anode foil to more than one voltage, this type of construction is limited to one voltage rating for all included sections. Obviously this would take the value of the highest section in the group. This is uneconomical as more foil area is involved than would be required if the anode were formed for the correct voltage rating of each section.

Since each cathode foil in this form of construction is in contact with the electrolyte common to all, it is obvious that current would flow between them and render the unit useless. Some special provision is, therefore, necessary to rectify this condition.

There are several ways of partially correcting this condition. The various methods are:

1. Unformed Cathodes.

This form of construction is the simplest and does not have any provision whatever to prevent leakage between the cathodes.

Theoretically, where the potential difference between cathodes is relatively small, the cathode which is more positive in relation to the other will attempt to form to the limit of the voltage difference between them, when placed in service. Once formed, this cathode would to a certain extent become insulated from the common electrolyte, due to the insulating film produced, and limit the leakage current to within practical limits.

In service, however, except in rare cases not usually encountered in practical applications, heat and internal gas pressure would be developed that would more than likely damage the entire unit. Even though this operation was successfully accomplished, the particular section involved would suffer a considerable loss in capacity due to the new cathode capacity created in series with it.

2. Formed Cathodes.

This construction is identical to the "unformed cathode" type, except that at least one cathode is formed during the process of manufacture.

This eliminates the possibility of physical damage to the capacitor due to internal heat and gas pressure that otherwise might develop. Additional foil area must be used to make up for the capacity loss due to the series capacity effect.

Constructions of this type, while obviously more practical, are still undesirable with respect to their ultimate characteristics and stabliity. It is practically impossible to wholly prevent cross current or feed back which, in the radio field, would affect the hum level.

The potential difference between the cathodes for the application intended must be kept within relatively low limits.

3. Isolated Electrolyte

In this construction a special barrier is made during the winding of the capacitor roll to separate the electrolyte between the ends of each cathode foil without breaking the continuity of the anode foil. A layer or layers of material theoretically impervious to the electrolyte must also be wound around the roll at each juncture to completely isolate the electrolyte necessary to each section.

The isolation of the electrolyte between the ends of the cathode foils is generally accomplished by considerably increasing the gap between them and attempting to keep that portion of the separator free from electrolyte. This portion of dry separator is usually further protected from electrolyte creepage by coating it with wax or other substance as nearly impervious to electrolyte absorption as possible.

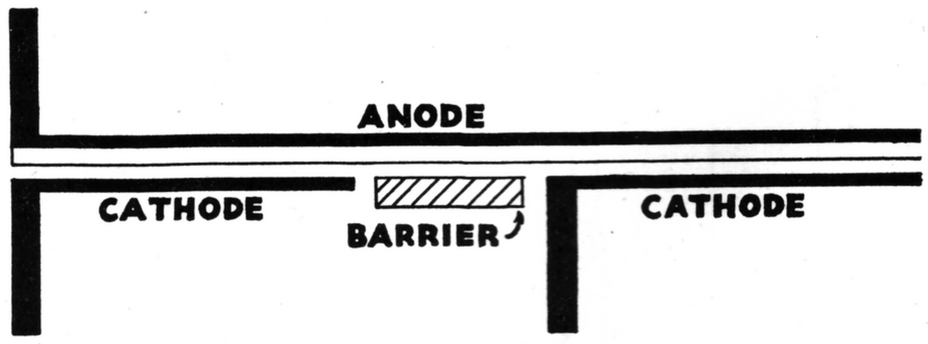

FIG. 9—*Common Anode with Isolated Electrolyte*

Separate Section Capacitors

This term applies to capacitors having two or more sections, internally insulated from each other, and where each section is provided with its own pair of terminals.

Separate section construction has not been widely used on original equipment since few filter circuits require individual connection to both positives and negatives of two or more sections. The major employment of this construction has been in the replacement field where these units could be readily adapted to common positive, common negative, or separate section applications.

The preceding comments regarding proportion of the individual sections, connections, etc., apply to the separate section types. Also, there is the problem of maintaining satisfactory intersection insulation for connection tabs and electrolyte.

Since separate section units must be larger in size than an equivalent common anode or cathode type, and in view of the consistent trend toward minimum size common connection units, the importance of separate section construction has diminished considerably.

External Mechanical Construction of Dry Electrolytic Capacitors

Dry Electrolytic capacitors have been housed in cardboard tubes, cardboard cartons, round and rectangular metal cans. Various types of mounting features were available, and either soldering lugs, screw terminals or flexible leads provided for external connections.

In order to give the complete development story of the Dry Electrolytic capacitor industry, brief descriptions are given of the constructions which have been used up to the present time.

Cardboard Cartons

Capacitors of this type were housed in rectangular cardboard cartons of various dimensions depending on the requirement of the application involved, and the space required by the included sections.

The capacitor itself was generally wrapped and sealed in varnished paper or equivalent before insertion into the carton, which had previously been wax impregnated, as an added protection against moisture absorption.

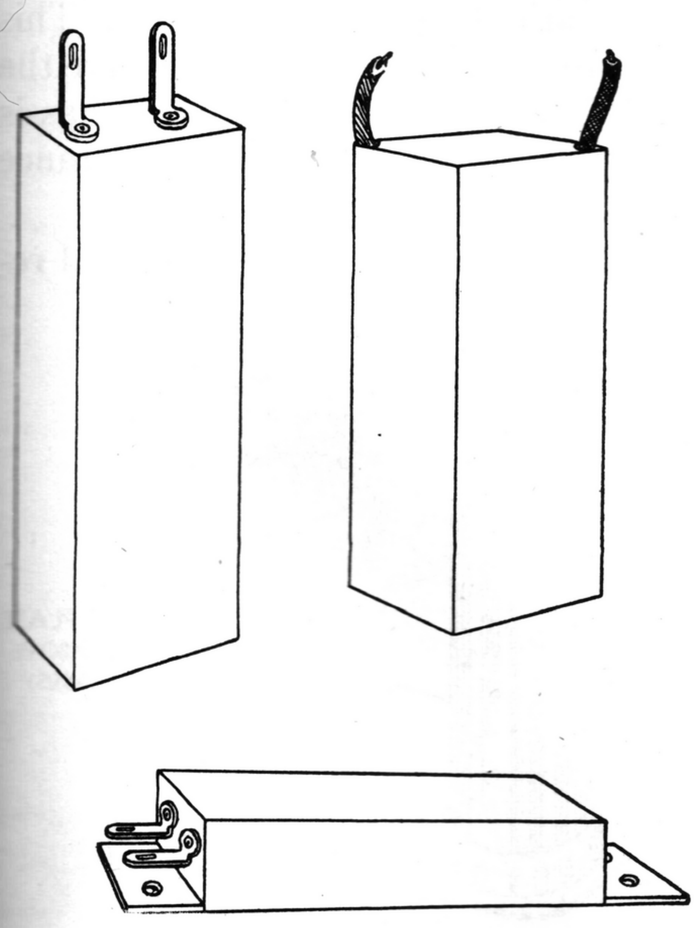

FIG. 10—*Typical Carton Types*

The carton type of capacitor was available with either flexible leads or soldering lugs and generally was specified to have mounting flanges made integral with the carton itself.

Capacity and voltage rating identification in the rectangular carton types usually took the form of printed or stamped legend adjacent to the various leads or terminals. Since the wide variance in capacity and voltage values forbade any standard lead or terminal color codes, this legend was important. Its frequent obliteration caused by age or abuse, has been a continual source of annoyance to the serviceman.

Identification was frequently limited to manufacturers' part number, and in some cases, differing beliefs as to rating methods for units incorporating common connections, led to some confusion during service operations. Fig. 11 illustrates one such system, employing common negative and common positive connection, wherein the four terminals were labeled with the total capacity of the combined sections. It would be difficult for one unfamiliar with the internal construction of the capacitor to identify capacity of the individual sections.

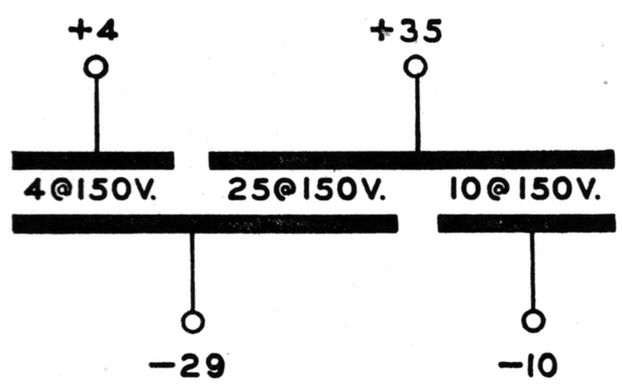

FIG. 11

Cardboard Tubes

Tubular cardboard housings, as containers for Dry Electrolytic capacitors, were used extensively for individual by-pass sections and later also became popular for filter capacitors.

These tubes were originally wax impregnated and later improved through the use of varnish impregnation.

They made possible a general improvement in capacitor quality over the carton type since effective sealing

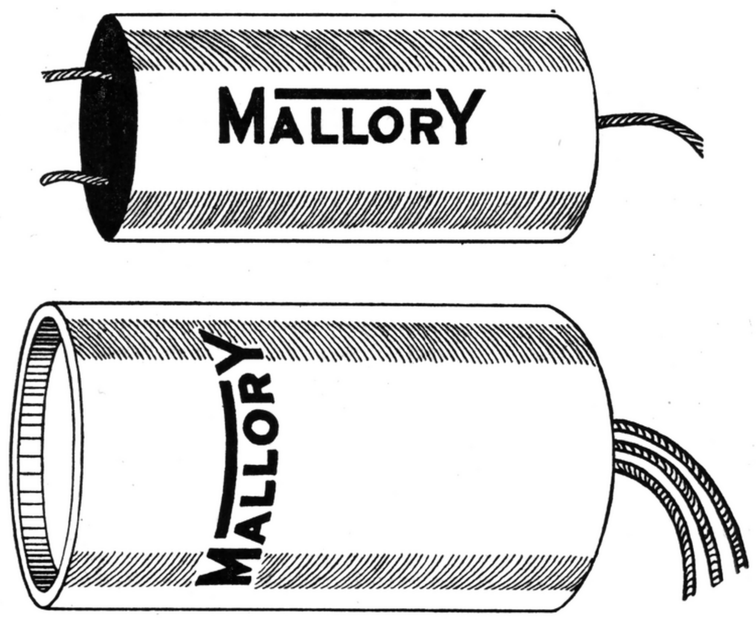

FIG. 12—*Typical Cardboard Tubular Capacitors*

was more easily maintained and sections were always left in their original round shape.

Almost all tubular capacitor construction has employed lead connections, since the rounded surfaces and limited end spaces do not lend themselves to terminal anchorage.

Identification of the tubular has corresponded to the systems used in the rectangular types on units of larger physical size. With the gradual decrease in capacitor size it has become increasingly difficult to stamp or print detailed identity in legible form, and frequent resort has been made, in the smaller single and dual units, to the practice of placing a narrow band or a series of + signs at the end of the tube from which the positive leads emerge. In tubular replacement lines, it has been possible through the use of standardized connections for wide coverage, and logical progression in capacity and voltage, to establish a universal system of color coding for ready identification.

Tubular units have been furnished with almost every conceivable type of mounting for either vertical or horizontal use. Such mountings range from the simplest, that of supporting the unit by its own leads, through the tangential strap, fixed metal tab, and spade bolt, to the rather elaborate adjustable ring clamp types.

Round Metal Cans (Inverted Mounting Type)

The first dry electrolytic metal can units were of the inverted mounting type, reflecting the mounting required

for a similar wet type. A considerable number of mounting and connection variations evolved from this start. For mounting, we had the metal or composition threaded neck, the ring clamps or brackets for grounded or insulated mounting, and a few spade bolt types. Connection methods included neck types with lugs or leads, and the type employing riveted terminals on the composition end piece. The round metal can provides a pleasing appearance and extra protection against atmospheric conditions where this feature is desirable.

Round can replacement units have also included constructions to cover the old large upright, multi-section wet units, employing terminal screw and nut connection.

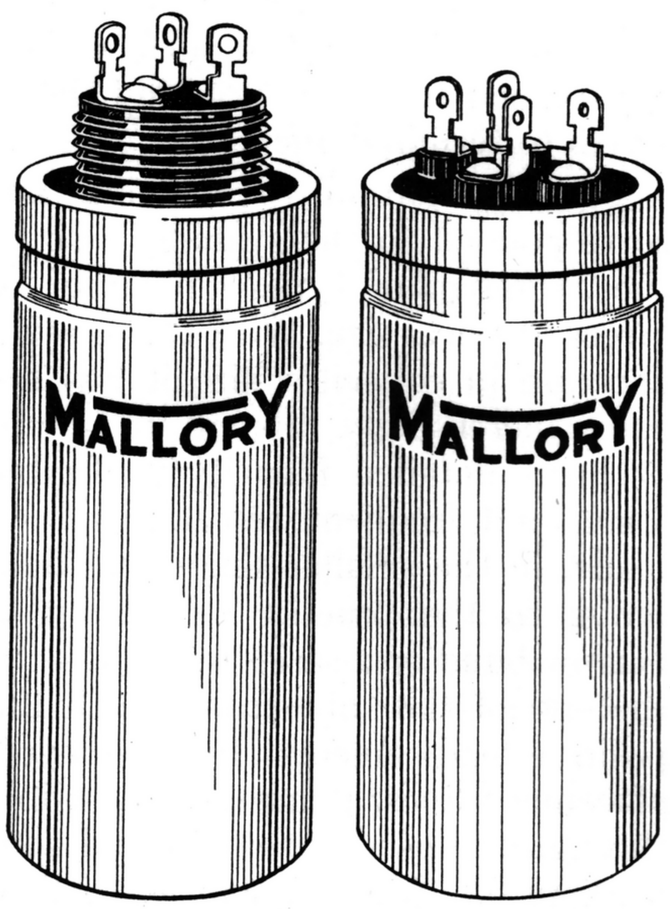

FIG. 13—*Typical Round Metal Containers*

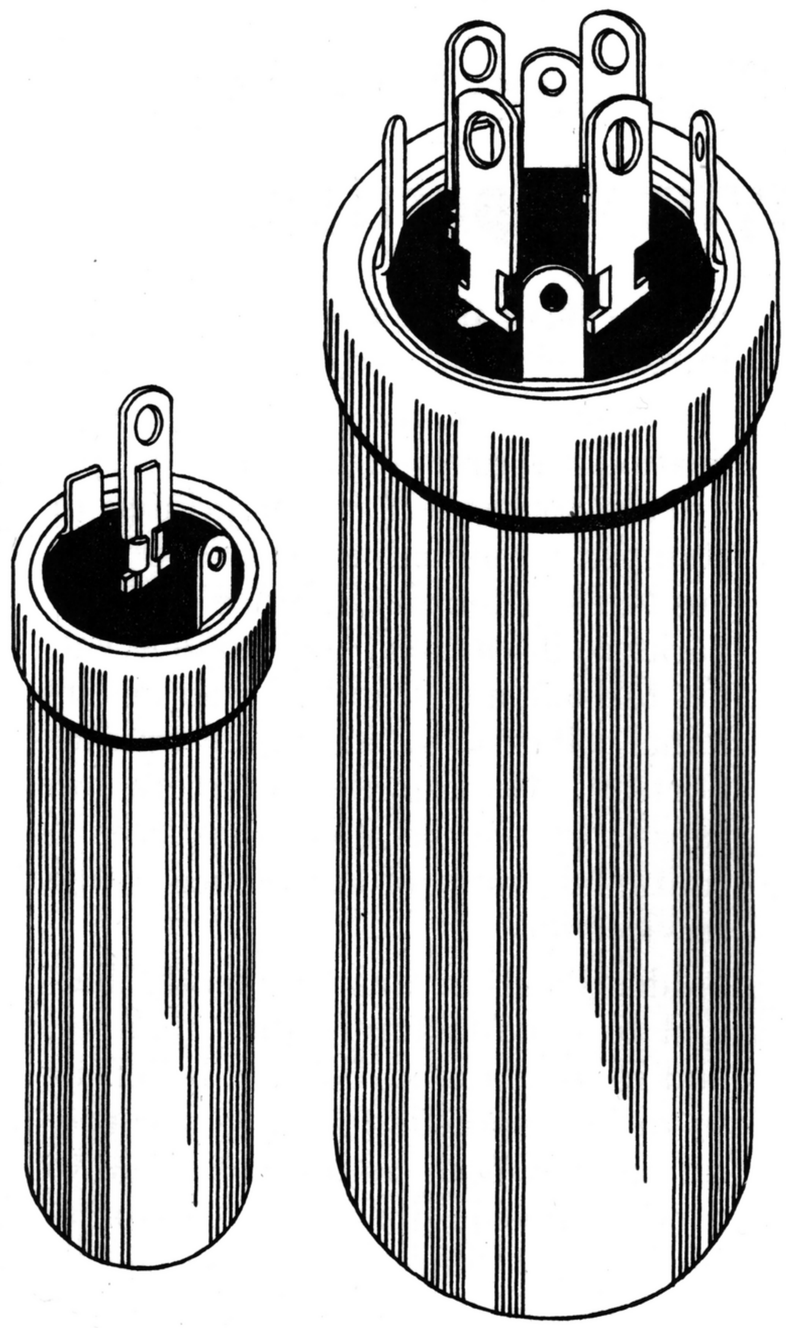

FIG. 14—*Minimum and Maximum FP Container Sizes*

Type FP Capacitor

The introduction of the FP capacitor has led to the widespread adoption of its standardized features, such as mounting, identification, containers, and electrical rating system. The success of this most comprehensive program to date, in the interest of standardized construction and application, merits a study of the factors involved.

General Description (Mechanical)

There are but six container sizes ranging from ¾″ diameter by 2″ high to 1⅜″ diameter by 3″ high. This size range covers any single, dual, triple or quadruple section capacitor used to date in the radio field and is designed to take care of any trend toward the use of increased capacity ratings likely to occur.

Every FP capacitor is identical in construction except for size, rating and mounting hole dimensions. All units are of external bead metal can construction and supplied with soldering lugs of special design clearly identified by a new simplified code character punched into the standard bakelite cover as shown below. The units are further identified for quick chassis assembly by the self-contained standard mounting feature integral with the container itself.

The standard, self-contained mounting feature, serves the dual purpose of effectively mounting the capacitor in a vertical position and providing a direct means of electrical contact to the cathode of the capacitor. This feature is a great advantage where the unit is to be insulated from the chassis and also provides low R.F. resistance contact.

The mounting feature provided re-

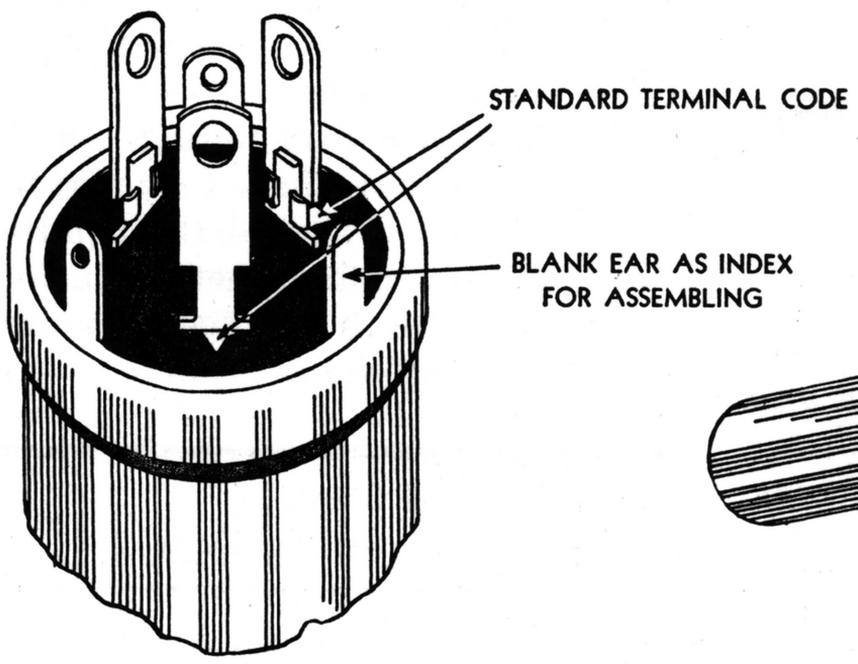

FIG. 15—*Type FP Lug Terminal Identification*

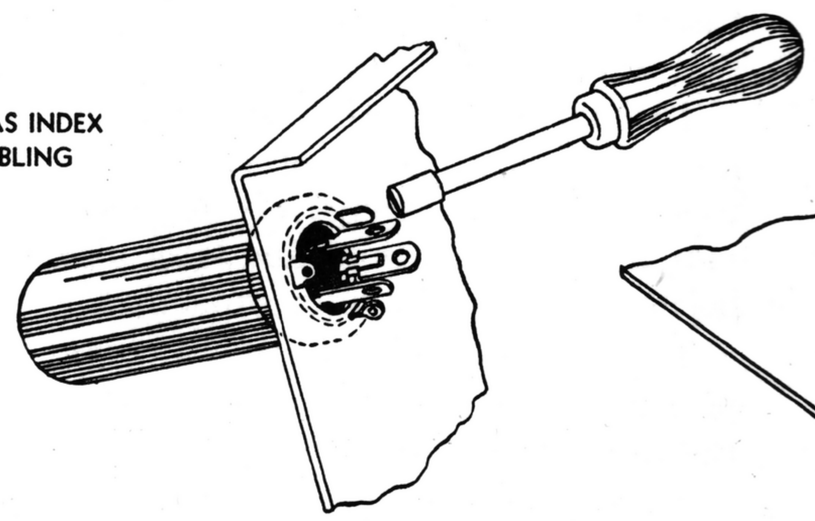

FIG. 16—*Simplified Method of Mounting FP Capacitors*

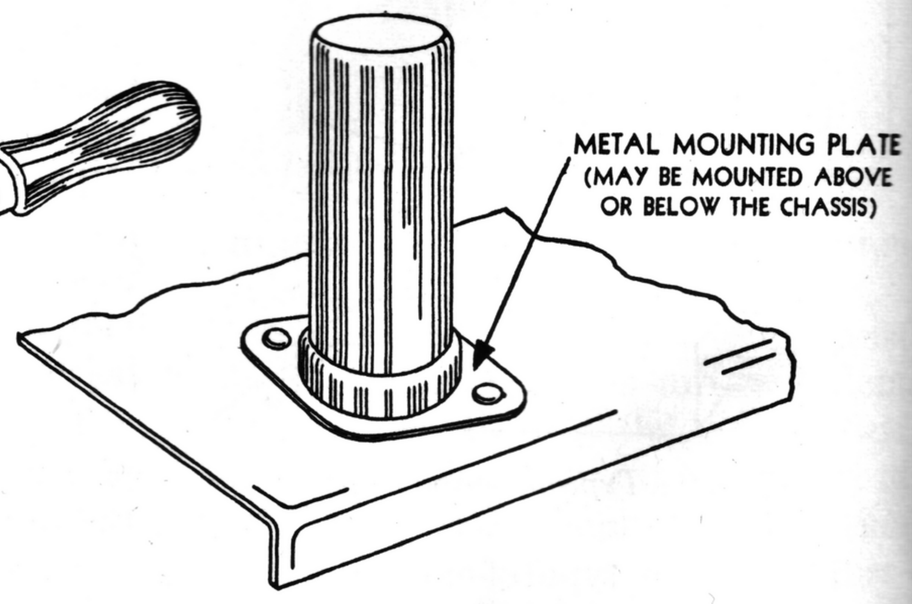

FIG. 17—*Grounded Mounting with Metal Plate*

quires no accessories of any kind and is quickly assembled to the chassis by means of a special tool (similar to a Spintite wrench) provided by the Mallory Company, or easily made in any shop. The twisted tongue method adopted for mounting as shown below requires a minimum of space.

From a service viewpoint, replacement may be readily accomplished with long-nose pliers.

Small metal plates are available for each of the three FP diameters. These plates, similar to a wafer tube socket, may be riveted to the chassis where this seems preferable. The metal plates for the popular one-inch diameter can size may be mounted in any tube socket hole having one and one-half inch rivet centers.

Where the unit is to be insulated from the chassis, bakelite plates similar to the metal plates just mentioned are provided. Insulating cardboard tubes may be used over the container where Underwriters specifications require this practice. The mounting ears are the cathode terminals as before.

Any FP capacitor may also be mounted in a horizontal position by the clamp or bracket method as shown. Note that provision is made for insulated mounting where required, and that the mounting ears, integral with the capacitor, provide the cathode connection to the unit.

The internal construction of the FP capacitor has been greatly simplified and improved over methods formerly employed. The anode tabs are an integral part of the anode itself affording low R.F. impedance, and are of heavy rectangular cross section for rigidity. They are designed to protrude through the special bakelite-pliable rubber combination top for direct and positive connection to the anode lug outside of the capacitor container.

The capacitor cartridge is rigidly attached to the bakelite cover before insertion into the container.

By-pass capacitors of the FP type are made by the identical process used for the FP filter capacitors and furnished in the standard ¾″ by 2″ container. They may be mounted vertically as previously described or horizontally by the special bracket available. The integral mounting ear, as before, is the cathode terminal and the units may be insulated from the bracket where it is required by circuit design.

All FP capacitors are identified by characters die-stamped into the metal containers. Permanent and always legible, this form of identification was adopted after a survey of the various methods formerly used. The standard stamping shows the capacity and voltage combination and identifying lug symbols.

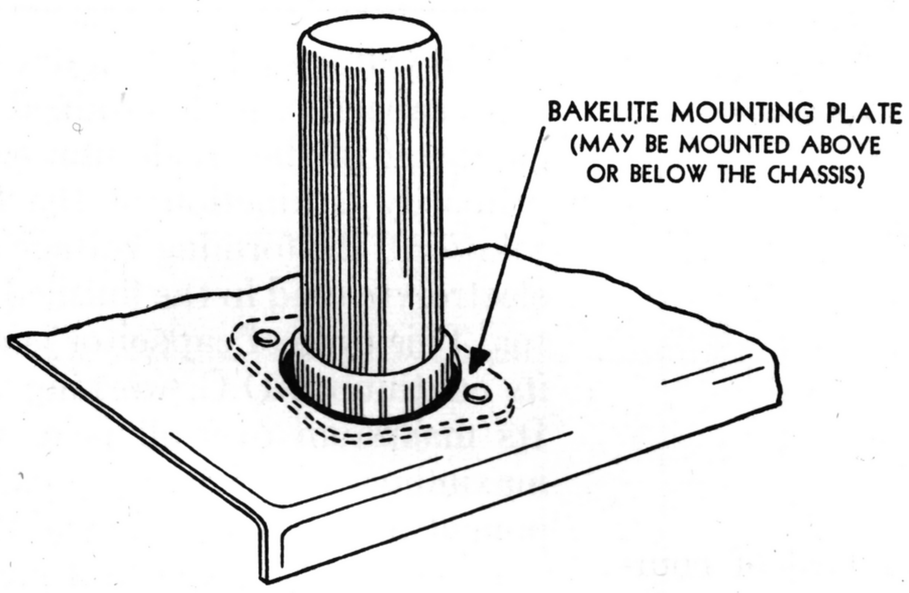

FIG. 18—*Insulated Mounting*

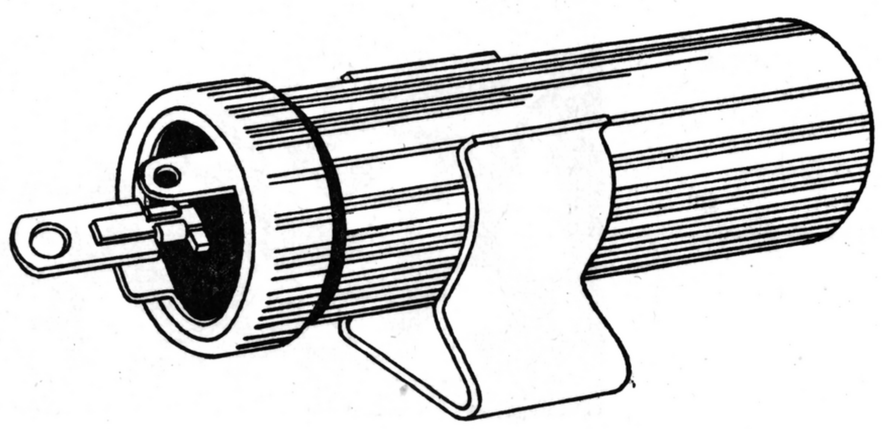

FIG. 21—*By-pass Capacitor with Horizontal Mounting*

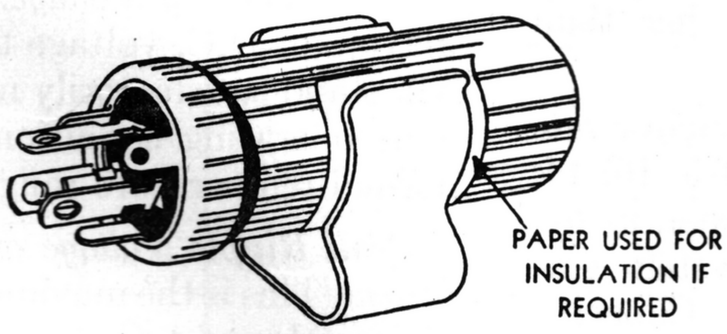

FIG. 19—*Horizontal Mounting*

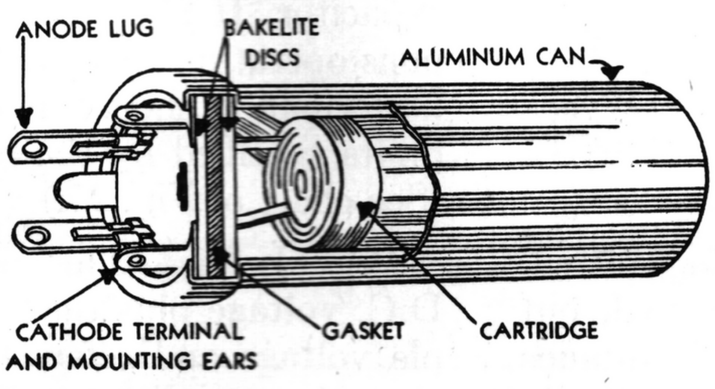

FIG. 20—*Type FP Internal Construction*

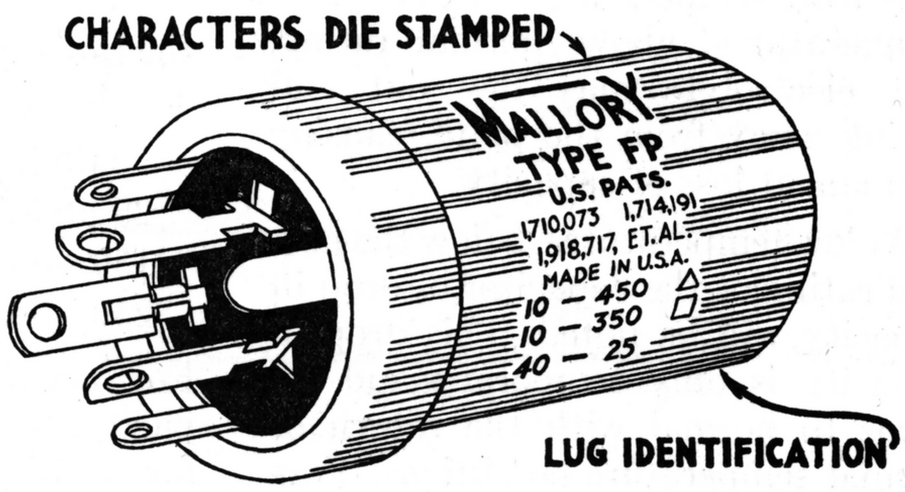

FIG. 22—*Method of Identification*

Electrical Characteristics of Dry Electrolytic Capacitors

In this section will be found a brief discussion of the major electrical characteristics pertaining to dry electrolytic capacitors.

Capacity

The capacity of a Dry Electrolytic capacitor is determined by the surface area of the anode exposed to the electrolyte and the thickness of the anode film. As previously discussed, it is possible to increase the surface area exposed to the electrolyte by etching, or otherwise roughening, the anode surface. In this type of construction, the capacity may be increased several times that for a plain anode of similar length and breadth.

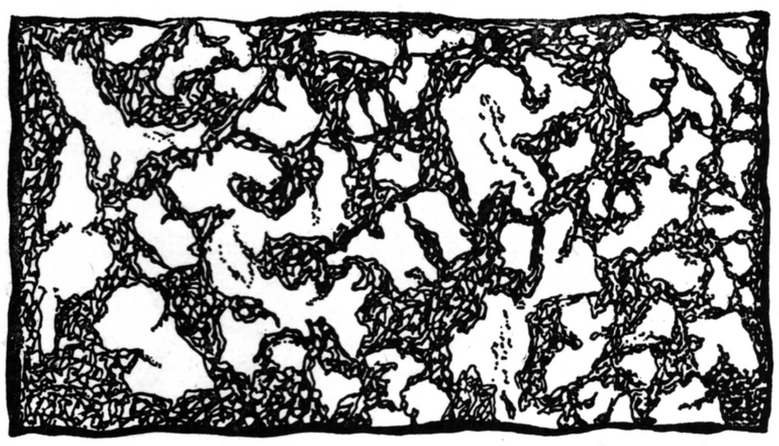

FIG. 23—*Magnified Cross Section Etched Anode Plate*

The great values of capacity obtained by electrolytic capacitors are due to the close proximity of the anode and the electrolyte (which is the cathode), these being separated only by the extremely thin oxide film. The capacity of well made electrolytic units is only slightly affected by temperature changes within the normal operating temperature range. At high temperatures, above normal rating, this electrolyte may dry out and shrink away from the plate, causing permanent loss of capacity.

At low temperatures, below the normal rating of the capacitor, a drop in capacity will be noted. This drop in capacity is only temporary and returns to normal with the return of normal temperature conditions. Further information regarding capacity versus temperature is given under the heading of "Temperature."

Capacitors operated at higher than their rated voltage may lose capacity slightly, but do not necessarily gain any capacity when operated at voltages below their rating. This is true even though operated at only a fraction of their regular voltage rating. (See Fig. 25.)

The shelf or idle period (no voltage applied) does not materially affect the capacity. Properly made units which have been out of service over two years show no appreciable change in this respect.

The generally accepted reference temperature for capacity measurements of 21° C. was originally adopted in order to have a standard of comparison. Correction factors may be applied if measurements of extreme accuracy are desired at other than 21° C.

The present trend in capacitor rating is toward the values of 5, 10, 15, 20 mfd. and multiples thereof, as exemplified by the rating system employed in FP capacitors. Capacity tolerances popularly used are roughly as follows:

Under 25 volts	−10%+200%
25 and 50 volts	−10%+150%
150 volts	−10%+100%
250 volts & over	−10%+ 50%

For accurate determination of capacity, a bridge should be used, but for routine testing the impedance method is satisfactory if periodically checked against a bridge or standard capacitor. Measurement of capacity is described in the "Test Section."

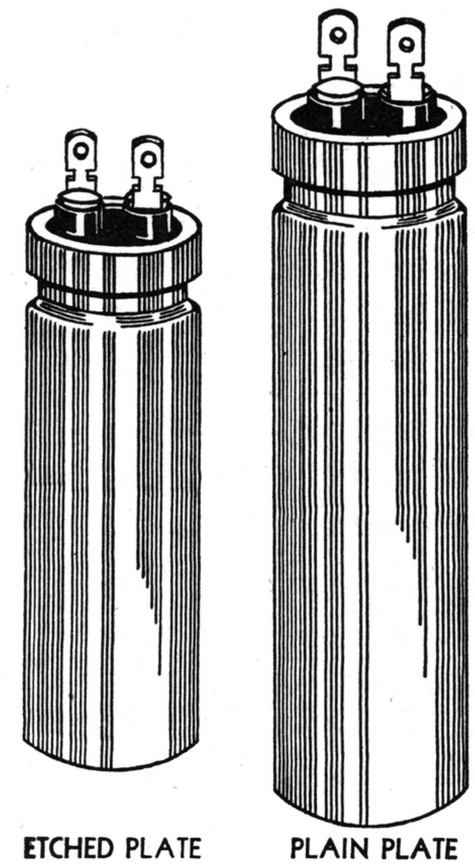

FIG. 24—*Comparative Size Etched vs. Plain Plate Capacitors*

Voltage

The voltage rating of a dry electrolytic capacitor is determined by the character of the anode film (which is primarily a function of the forming solution), the forming voltage and the electrolyte used in the finished capacitor. This type of capacitor is rated at its continuous D.C. working voltage. Its maximum over-all peak voltage, maximum superimposed A.C. component or ripple voltage and its surge voltage are also important characteristics.

D.C. Working Voltage. This is the maximum D.C. voltage the capacitor will stand satisfactorily under continuous operating conditions within its normal temperature range.

Peak Ripple Voltage or A.C. Component. This is the maximum instantaneous value of A.C. across the capacitor due to the A.C. component in the capacitor. It also refers to a continuous operating condition and for best performance should not exceed the limits specified by the manufacturer. (See chart of Fig. 27.)

Peak Voltage. This represents the D.C. voltage plus the peak A.C. ripple voltage and refers to continuous operating conditions. (Peak voltage

should not be confused with surge voltage.)

Surge Voltage. This is a term used in reference to acceptance tests for comparative purposes. It is the maximum voltage the capacitor will stand without injury for a period of five minutes when applied to a series combination of the capacitor and a resistance having a value in ohms equal to 20,000 divided by the rated capacity in microfarads of the capacitor in question. Momentary surges are sometimes encountered in service and will not damage the capacitor if they do not exceed this rating. Continuously applied, it will generally ruin an ordinary condenser in a short time, because of the development of heat within the unit.

When first turned on, many radio receivers and amplifiers develop an unusually high surge voltage across the filter circuit, because there is little, if any, load on the filter. This is especially true where heater type tubes are used, with a rectifier of the filament type.

An electrolytic condenser is limited in the amount of voltage which may be impressed upon it because of the puncturing of the dielectric film on the plate when the voltage exceeds the limitations imposed by the electrolyte.

The voltage at which the film of an electrolytic condenser starts to puncture is called the surge voltage. The highest value generally obtained is approximately 525 volts.

Electrolytic condensers are correctly rated as follows:

Working voltage, 450; surge voltage, 525.

This means that the condenser is designed to work continuously at a D.C. potential of 450 volts. Superimposed upon this is, of course, the ripple voltage. Fig. 27 gives the practical limit for the ripple voltage which may be applied to different electrolytic condenser ratings.

Measuring Surge Voltages—The best practical way to make this measurement is to disconnect all filter condensers and install a 1 mfd. paper condenser at the output of the rectifier. A 1,000 ohm per volt meter applied at the paper condenser terminals, will then indicate the voltage applied to the condensers during the heating cycle of the tubes. Be sure that the tubes are cold and the meter is attached before the set is turned on. The first steady reading (not maximum swing of the needle) of the meter may then be taken as the maximum surge. As the set warms up, the needle will drop back from the surge voltage to the operating voltage. The paper condenser may be connected to the terminals of the voltmeter if more convenient.

It is recommended that this measurement be made where high surges are suspected, as this initial surge affects all the filter sections.

Surge voltage should always be measured wherever the line voltage is high; i.e., above the standard level of 110 volts, as in many localities the line voltage may rise to 125 volts or more.

Obviously, where the ordinary type of condenser is used, the speaker plug should never be removed while the set is on, as this removes all load and may damage the first filter condensers. If there is a possibility of this happening, as on amplifiers, we suggest the use of Mallory Type HS Condensers.

Scintillating Voltage. This represents the critical or sparking voltage char-

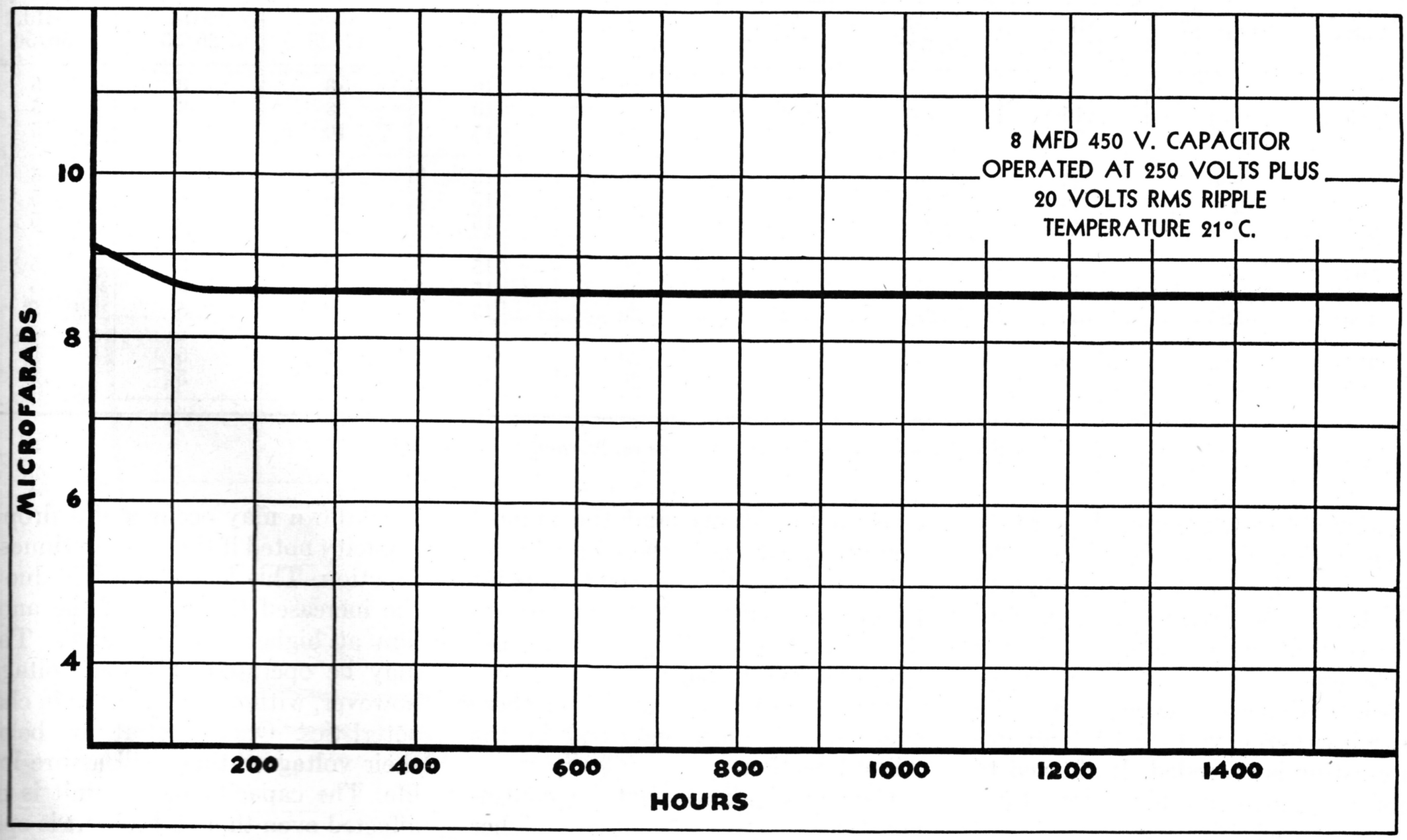

FIG. 25—*Capacitor Operated at Lower Than Rated Voltage*

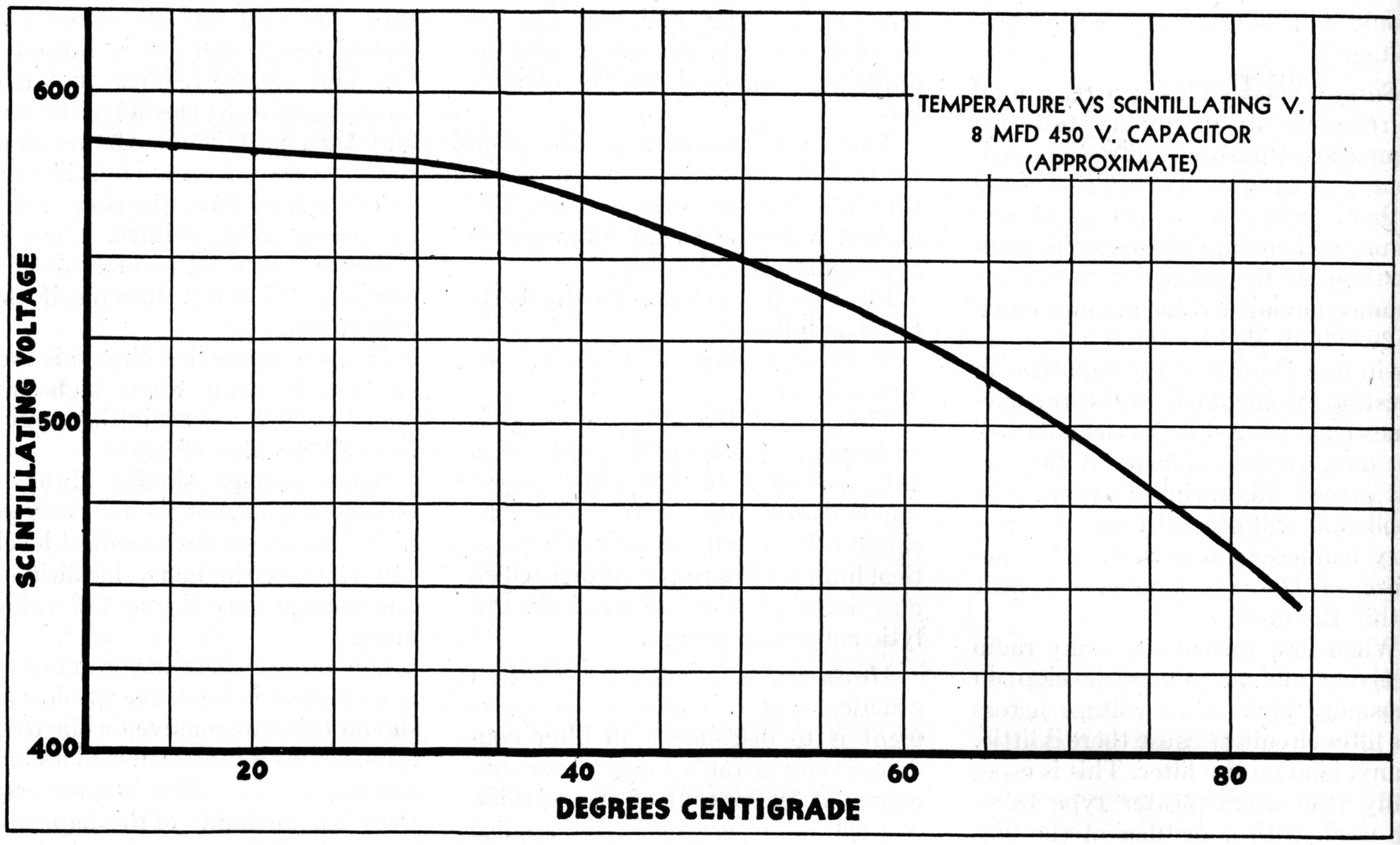

FIG. 26—*Effect of Temperature on Scintillating Voltage*

D.C. Operating Volts	Maximum Surge Voltage	Max. Peak A.C. Ripple Voltage at 120 Cycles							
		Mfd. 1, 2, 3	Mfd. 4, 5, 6	Mfd. 7, 8, 9	Mfd. 10/12	Mfd. 13/16	Mfd. 17/25	Mfd. 26/35	Mfd. 36/50
25	40	10	10	10	10	10	8	8	5
50	75	15	15	15	15	10	8	8	5
100	150	25	20	20	20	15	10	8	5
150	200	25	20	20	20	15	10	8	5
200	250	30	27	25	20	15	10	8	5
250	300	30	27	25	20	15	10	8	5
300	350	30	27	25	20	15	10	5	5
350	400	30	27	25	20	15	10	5	5
450	525	30	27	25	20	15	10	5	5
475	525	30	27	25	20	15	10	5	5
500	525	30	27	25	20	15	10	5	5

FIG. 27—*Surge and Ripple Voltage vs. Normal D. C. Rating*

acteristic of the capacitor. It is determined by the chemical formula of the final electrolyte, and is only slightly affected by the original forming solution or voltage used to provide the oxide film.

Scintillation only occurs when the capacitor surge voltage or temperature rating is exceeded. If allowed to persist, it may cause liberation of gas or actual carbonization of the separator material. This may eventually cause a breakdown and the applied voltage should not, therefore, be allowed to reach the scintillating point for obvious reasons. Note paragraphs on "Gas Pressure," page 271, and "Separators" on page 257.

Methods of measuring all of these characteristics are described in the "Test" Section.

Capacitors should not be continuously subjected to voltages higher than their working voltage ratings, as breakdown may occur and a drop in capacity noted if the unit continues to function. This latter effect is due to the increased thickness of the anode film at higher voltage values. They may be operated at lower voltages, however, without any change in characteristics. Operation at, or below, their voltage ratings will assure long life. The capacity of the unit is not affected even though the unit is operated at very low voltages for extended

periods.

A chart is shown giving the surge voltage and maximum peak A.C. ripple voltage for various working voltage ratings. Note that the capacity has an effect on the ripple voltage allowable. This is due to the heat dissipation being affected somewhat, by the size of the completed unit.

Polarity

Most Dry Electrolytic capacitors designed for direct current or intermittent direct current (rectified A.C.) are of the polarized type. In such cases, only the anode has been formed or provided with the insulating oxide film. This film has a peculiar unidirec-directional conductivity characteristic, insofar as it allows heavy current to pass in one direction and very little in the other direction.

Consequently, D.C. capacitors should not be subjected to reversed polarity, as the heavy current passing through the capacitor under this condition will raise its internal temperature and may cause serious damage to the unit.

However, the anode film itself is not harmed by reversed polarity in any way except when sufficient heat is generated. Therefore, short applications on reversed polarity do not necessarily injure the film.

The cathode foil tends to form an oxide coating when the polarity has been reversed even for a relatively short period. Therefore, repeated applications on reversed polarity, even though removed before too great a temperature has been reached, will cause a drop in the capacity of the unit. This is obvious, as under such circumstances we now have two capacities in series due to the dielectric properties of the newly formed cathode film.

Non-Polarized Capacitors

This applies to Dry Electrolytic capacitors so constructed that they function equally well in either direction, from a polarizing standpoint, on D.C. lines. They are not designed for, and should not be used on alternating current.

In this construction, the cathode plate is formed during manufacture to exactly the same voltage as the anode. In such a case, the anode and cathode lose their identity and simply become electrodes.

Non-polarized capacitors may be secured in any single capacity, and in restricted concentrically wound sections of equal voltage.

The anode area is twice that required for a similar capacity in the polarized type, and consequently the unit is considerably larger in physical size.

Non-polarized capacitors are for applications where the voltage supply might become reversed and remain so indefinitely.

Semi-Polarized

This type is similar to the non-polarized type, except that the cathode is formed to not more than one-half the voltage rating of the anode. This limits the time a reversed voltage could be applied before damage to the capacitor would ensue.

The anode area is up to 50% more than a regular polarized capacitor of

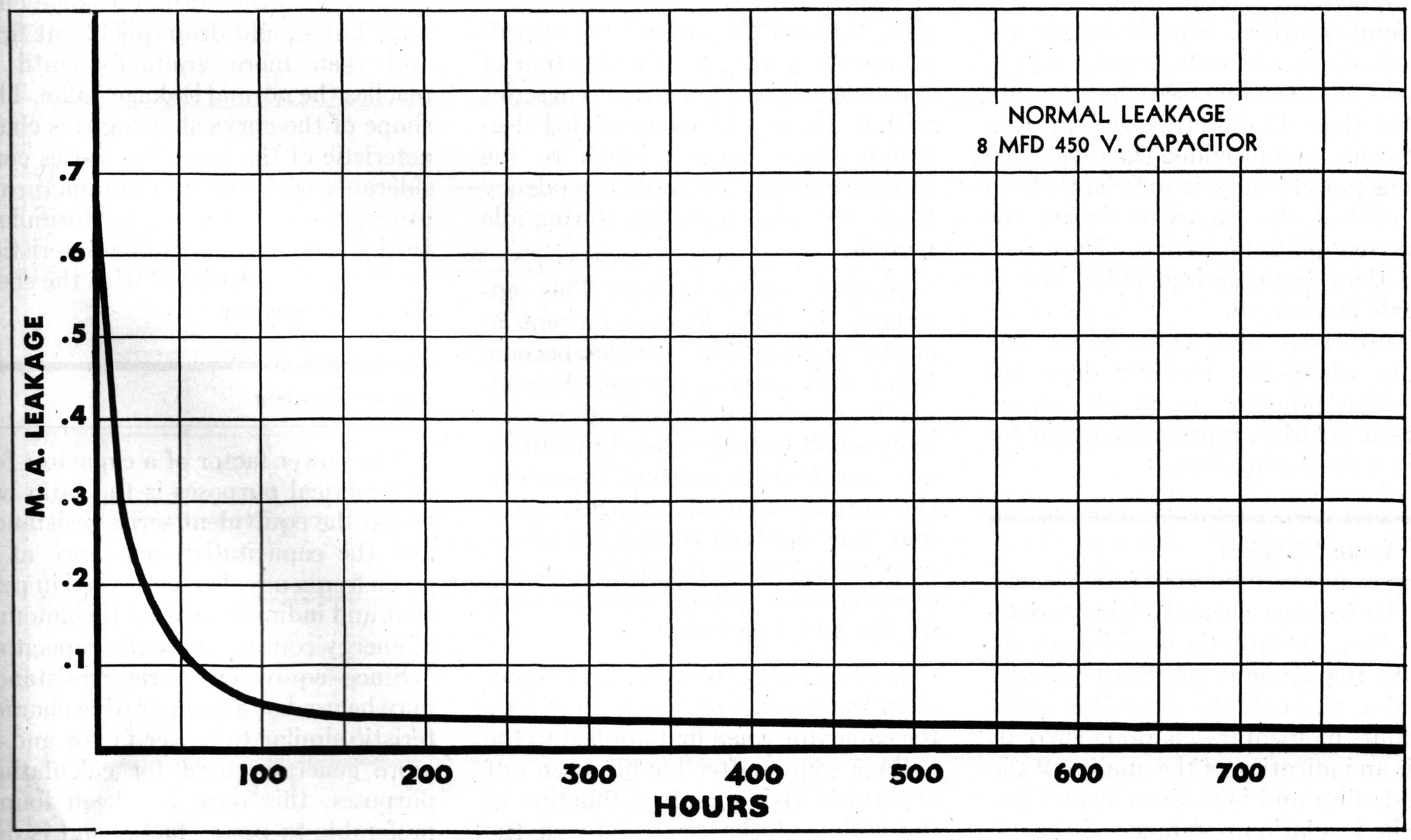

FIG. 28—*Normal Leakage Current*

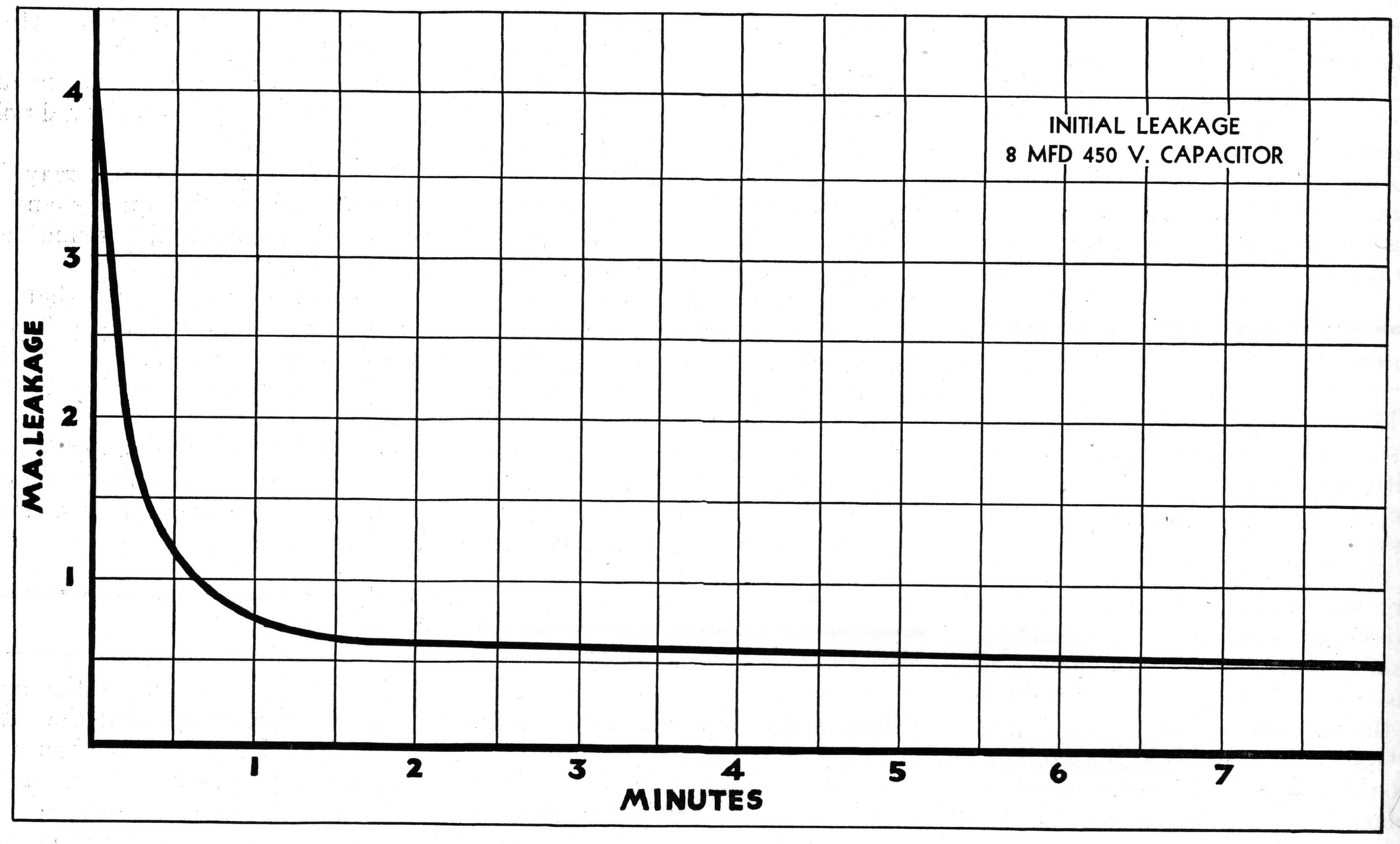

FIG. 29—*Initial Leakage Current*

similar capacity, and the size of the unit falls between the polarized and non-polarized types.

Semi-polarized capacitors are for applications where the voltage supply might become reversed, but for not more than 15 minutes and at rare intervals, and provided the regulation of the power source is sufficiently high to protect the capacitor during the reversed polarity period. They cost less than non-polarized units, due to anode area saved.

Auto-radio and D.C. house line radio where the receiver does not function properly, or at all, on reversed polarity, represents a field for this type of capacitor.

Leakage Current

The leakage current characteristic of a Dry Electrolytic capacitor represents the amount of direct current flowing through the capacitor other than its momentary charging current. It is an indication of the quality of the anode film and is a direct expression of the insulation resistance of the capacitor. The leakage current characteristic is affected by temperature. The leakage current is not affected by the series resistance representing the path through the electrolyte, as this represents a very minute fraction of the dielectric resistance and is in series with it. Incorrectly compounded electrolytes have some relation to the leakage current, due to their tendency to dissolve the anode film during idle periods.

Normal Leakage Current. This represents the D.C. leakage current in actual service and should become lower with continued use. A well-made capacitor will have an exceedingly small leakage when in continuous use. On intermittent operation, the normal value of leakage current may vary between 50 and 100 microamperes per mfd. depending on the capacity and voltage rating, except for the initial periods.

Initial Leakage Current. This represents the amount of current drawn by the capacitor when first applied to the voltage source after having been out of service. It is mainly a function of the action of the electrolyte on the anode film, the quality of the anode film and the length of the idle period. The initial current is relatively high as compared to the normal leakage current, but should drop quickly at first and then more gradually until it reaches the normal leakage value. The shape of the curve showing this characteristic of the capacitor varies considerably with various manufacturing processes and electrolyte formulas. Initial leakage current characteristics are generally associated with the shelf life of a capacitor.

Power Factor

The power factor of a capacitor for all practical purposes is the ratio between the equivalent series resistance and the capacitative reactance at a given frequency. It is expressed in percent and indicates mainly the amount of energy consumed by the capacitor.

Since equivalent series resistance may be used as a comparative characteristic similar to power factor and is more generally used for calculating purposes, this term has been found preferable to power factor and is described in the following paragraph.

Equivalent Series Resistance

This is an important characteristic and is used repeatedly in mathematical equations relating to electrolytic capacitors. It is therefore a better term than power factor for most investigations regarding them. The equivalent series resistance represents the total losses (watts divided by I^2) in a capacitor due to:

a—Dielectric loss of the oxide film.
b—Contact resistance.
c—Electrolyte resistance.
d—Insulation resistance.

Due to the nature of an electrolytic capacitor, it would be difficult, if not impossible, to accurately ascertain the values of all these losses separately. They may be satisfactorily controlled, however, from a production standpoint.

The combined effect of these losses is expressed as the equivalent resistance value necessary to produce an I^2R loss of the same magnitude. The equivalent series resistance changes with frequency and temperature.

Stability, rather than the initial series resistance value (within certain limits), is the major feature. Initially excessive, or a continually increasing series resistance characteristic affects the filtering, or by-passing efficiency, temperature rise and life of a capacitor to varying extents.

A low equivalent series resistance characteristic assures freedom from "motor-boating" or low frequency oscillation of the circuit. In view of the foregoing, it is obvious that the lower the series resistance, the lower the capacity required.

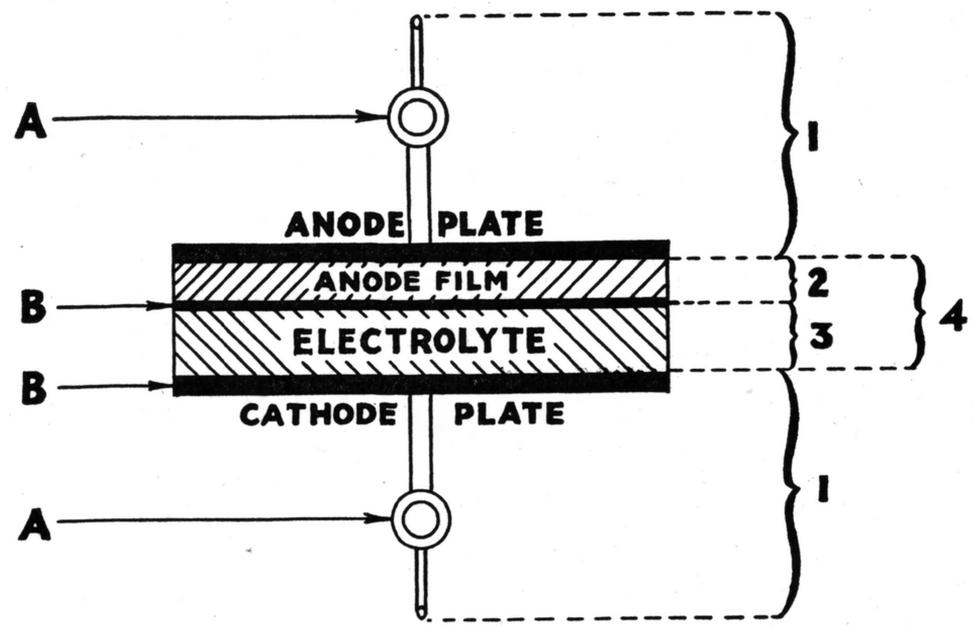

A—RIVET CONTACT RESISTANCE
B—ELECTROLYTE CONTACT RESISTANCE
1—SERIES RESISTANCE OF PLATE AND LEAD WIRE ASSEMBLIES
2—DIELECTRIC LOSS OF ANODE FILM
3—SERIES RESISTANCE OF ELECTROLYTE
4—PARALLEL LEAKAGE RESISTANCE

FIG. 30—*Equivalent Series Resistance Factors*

High Frequency Impedance

The value of a low impedance characteristic at high frequencies is becoming more important with the de-

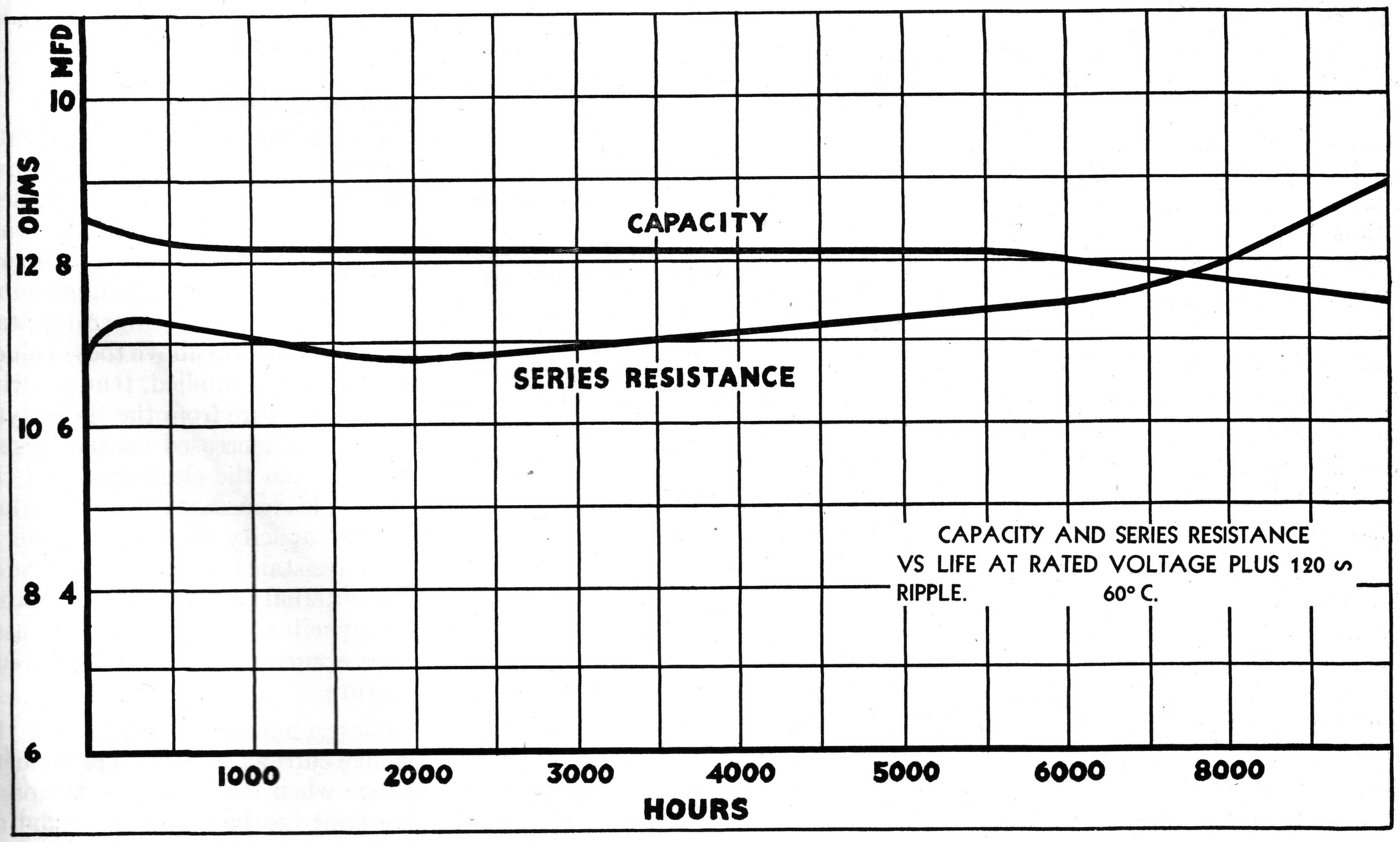

FIG. 31—*Series Resistance vs. Life*

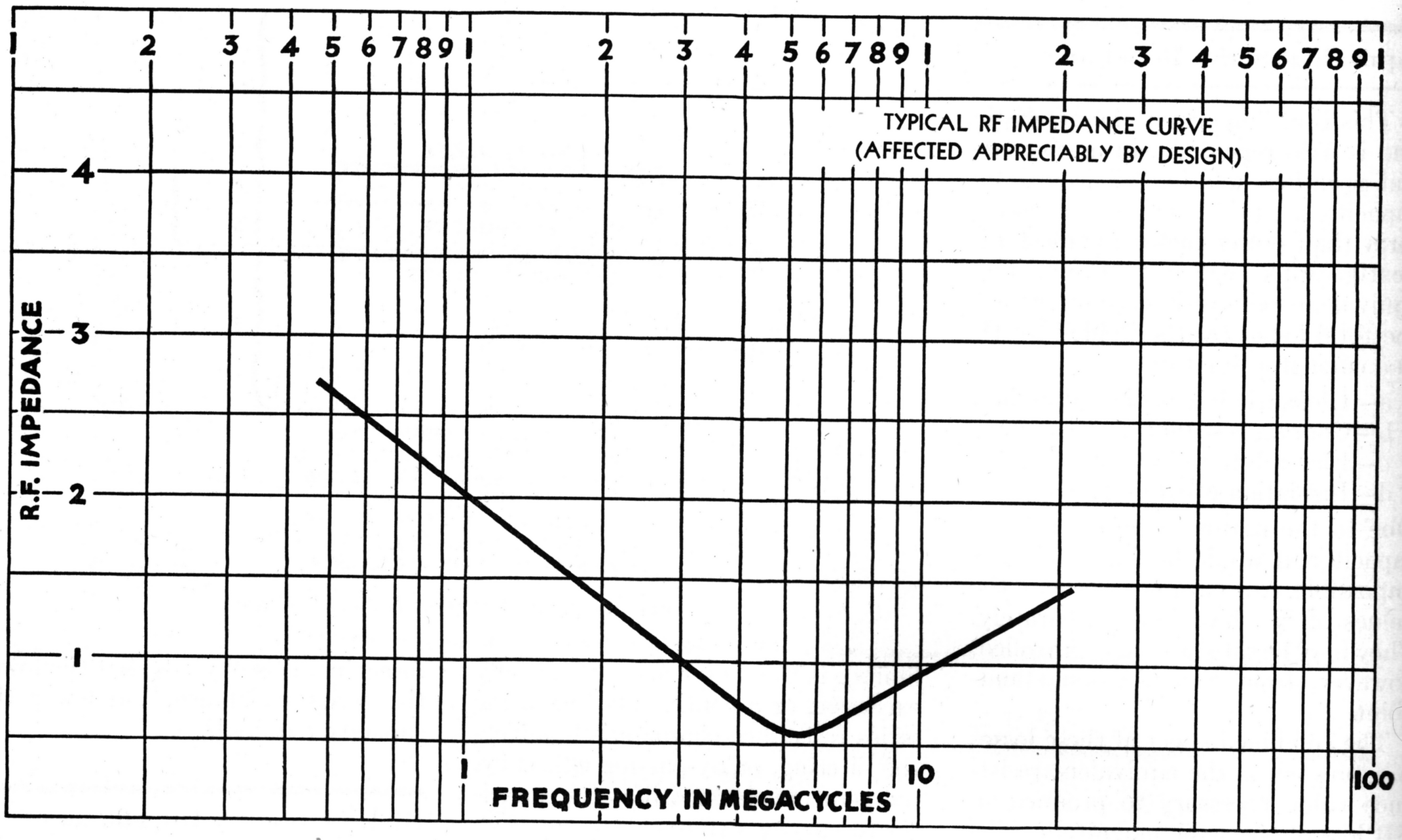

FIG. 32—*R. F. Impedance vs. Frequency*

velopment of efficient all wave and auto radio receivers. It is entirely possible to provide dry electrolytic capacitors having an R.F. impedance low enough, at ten and even twenty megacycles, to assist in the suppression of vibrator hash or other high frequency disturbances in rectifier circuits. R.F. impedances of less than 2 ohms at 20 megacycles are possible if special precautions are taken in production.

The high frequency impedance characteristic of a capacitor mainly affects its by-passing performance. The determining factors are:

a—Inductive value.
b—Lead assembly.
c—Electrolyte and film characteristics.

Where more than one capacity is housed in a single container it is often possible to provide a lower impedance on some sections than on others by means of extra cathode tabs and correct anode sequence. It is important therefore to designate the order in which low impedance is desired in a multiple section unit.

Graphs showing the possibilities with respect to R.F. impedance characteristics are shown. It is suggested that measurements be made by the use of a Q meter.

Temperature

Temperature is an important consideration from an application standpoint, as it is closely related to all of the characteristics of the capacitor.

In planning the location of the capacitor with respect to other component parts, serious consideration should be applied to the capacitor's proximity to transformers, tubes and high current resistors, because of the usual temperature rise involved in these components.

The normal operating range of a D.C. dry electrolytic capacitor, is between 32° F. (0° C.) and 140° F. (60° C.). It is, however, possible to design capacitors for special temperature values when the actual operating conditions are made known to the manufacturer.

In auto radio sets and other applications where temperatures run unusually high (160° to 180° F.), it is imperative that this condition be noted on the specifications. This enables the use of the proper process in the production of capacitors intended for such service.

High Temperatures

Electro-chemical action is greatly accelerated at elevated temperatures. The leakage current and equivalent series resistance characteristics vary slightly within the normal temperature range but increase appreciably above the maximum temperature rating. Temperatures above these values, if continuously applied, tend to drive out the moisture from the electrolyte, resulting in increased contact resistance between the electrolyte and the anode. This causes an ultimate reduction in capacity and an increase in series resistance that is accelerated when internal heat is generated within the capacitor itself, due to increased leakage current noted at high temperature.

These characteristics, except the leakage current, undergo a permanent change when the maximum temperature limit has been exceeded, and do not return to their original values

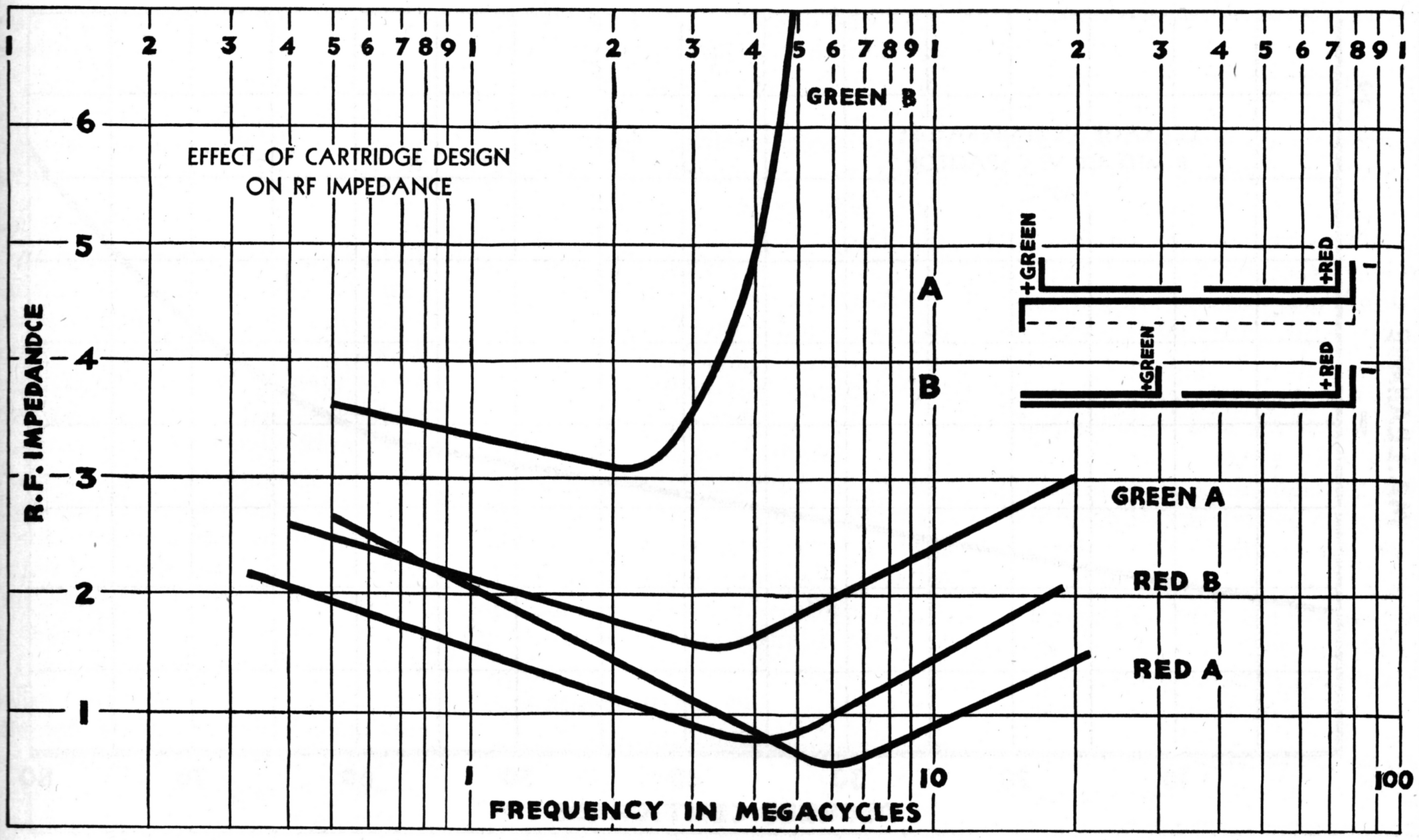

FIG. 33—*Effect of Cartridge Design on R. F. Impedance*

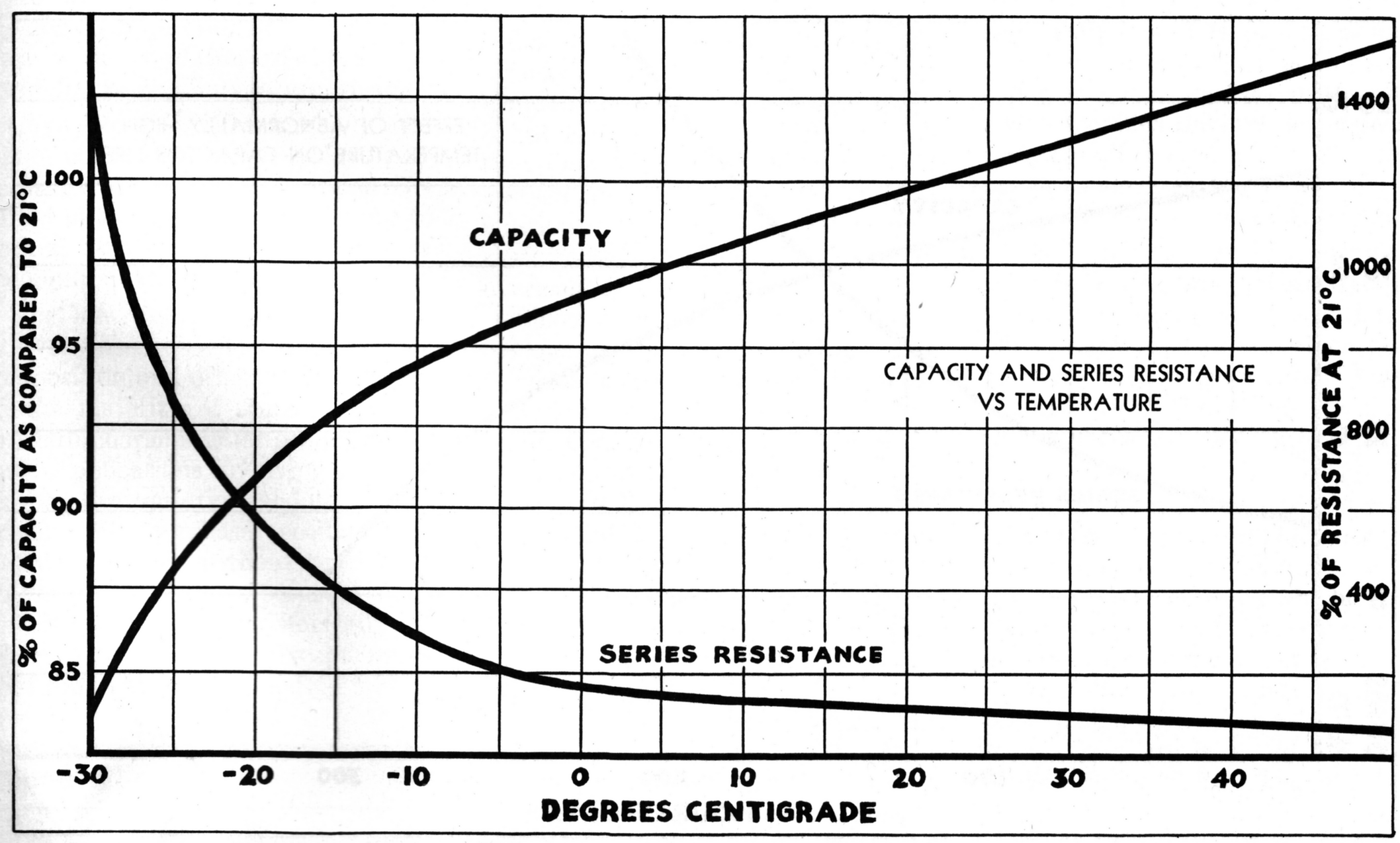

FIG. 34—*Capacity and Series Resistance vs. Temperature*

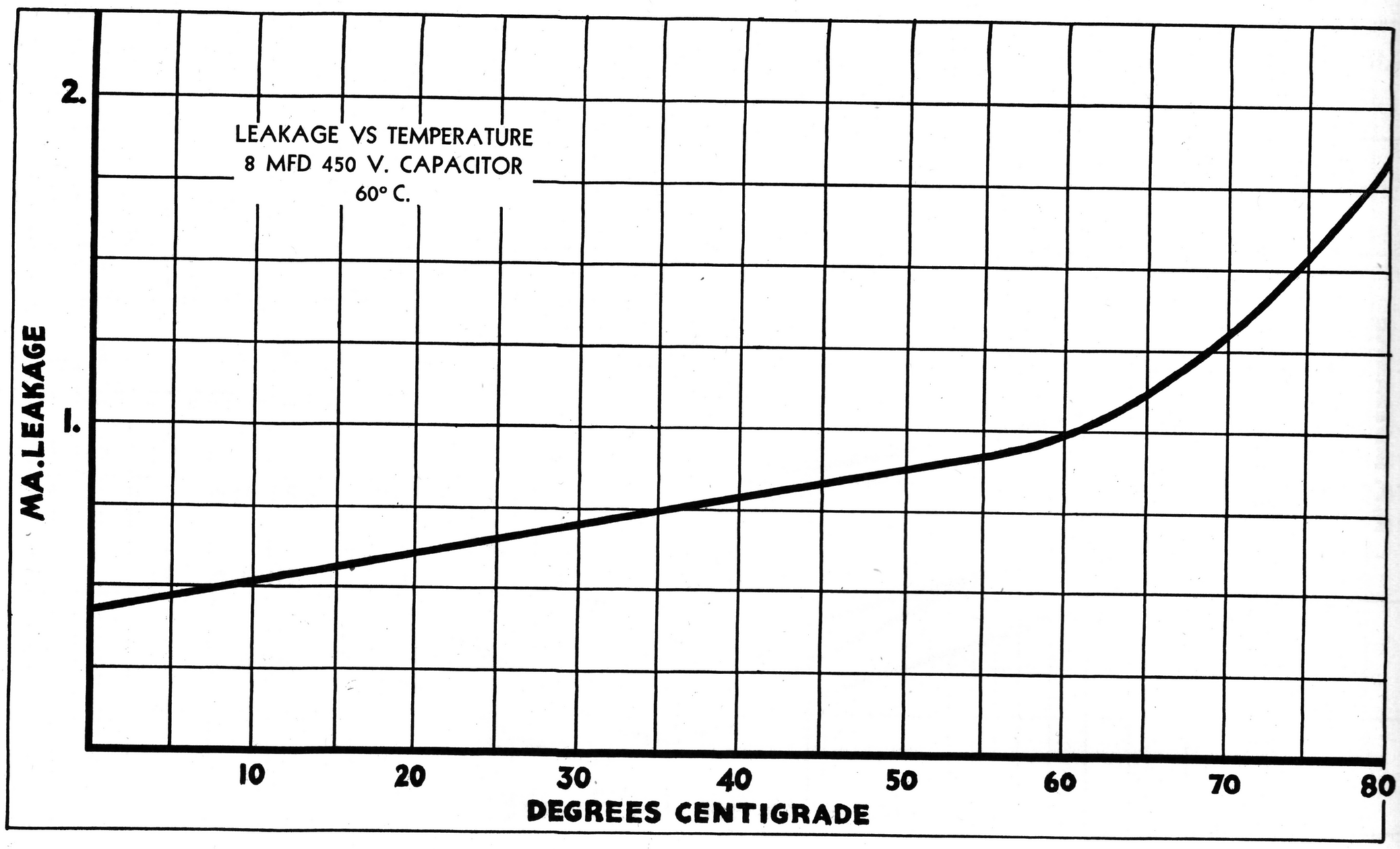

FIG. 35—*D. C. Leakage vs. Temperature*

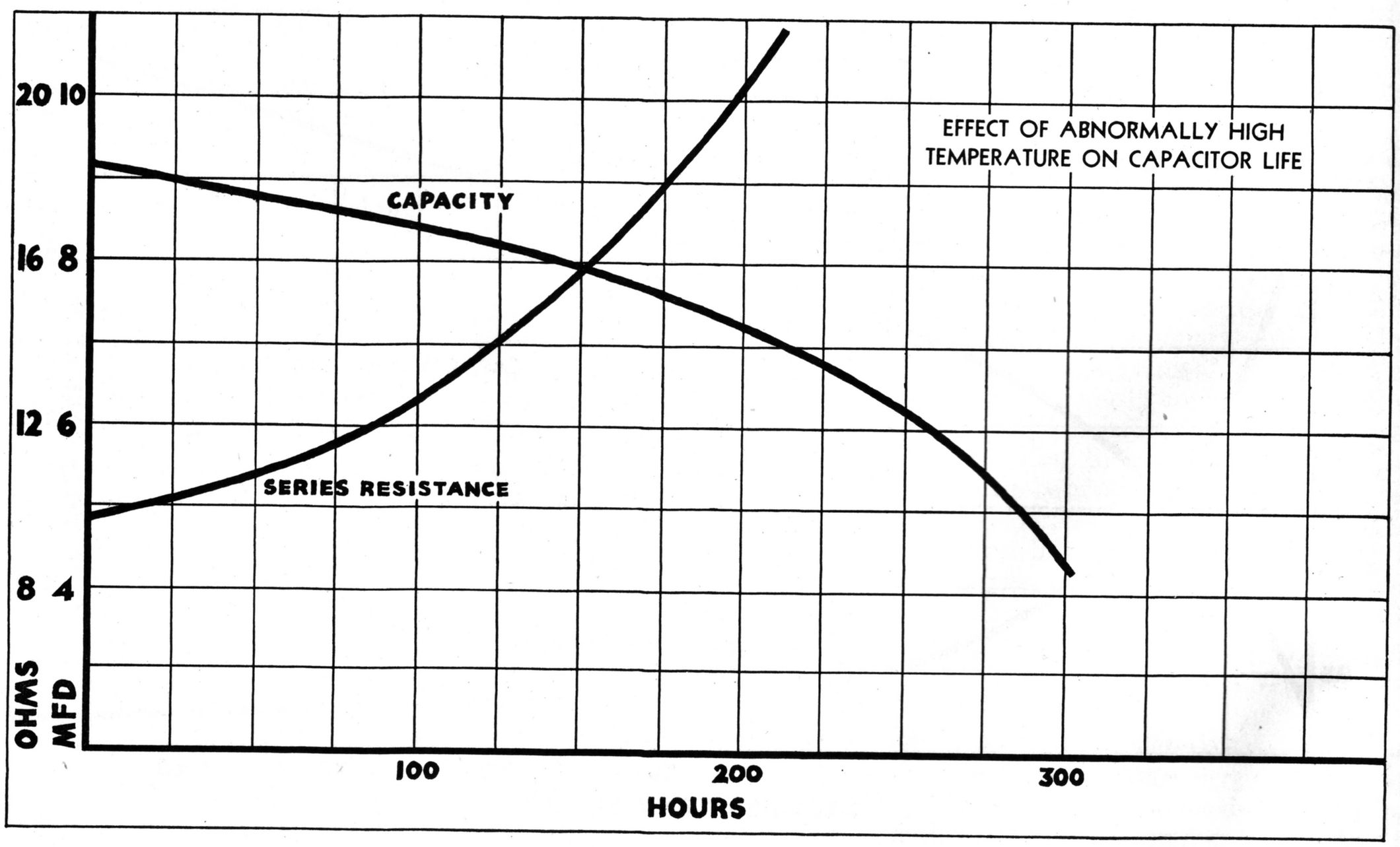

FIG. 36—*Effect of Abnormally High Temperatures on Capacitor Characteristics*

with a return to normal temperature conditions.

The sparking or scintillating point of the electrolyte is lowered with increased temperature above normal rating.

Low Temperatures

At temperatures below normal, the chemical action of the electrolyte is assumed to be affected by ionic immobility due to the freezing of the ionizing agent. A loss of capacity and an increase in equivalent series resistance is noted at subnormal temperatures while the leakage current decreases slightly. The capacitor performance at sub-zero temperatures is mainly affected by the increase in series resistance and only slightly by the decrease in capacity. (See Fig. 34 on page 269.)

Capacitors subject to temperatures below normal are not permanently affected, however, and the characteristics return to their initial values with the return of normal temperature conditions.

It is essential to remember that capacitors in a device already operating at subnormal temperatures generally exceed the outside temperature, due to the internal heat generated by the device in question. This is in contrast to the condition existing in abnormally high temperature regions.

Capacitors in devices that have been out of service at extremely low temperatures react as though open circuited at first, but start returning to normal with the temperature rise of the equipment.

The low temperature characteristics vary according to the electrolyte composition and other design details. In the majority of applications the sub-zero characteristics are unimportant. Applications involving extreme temperature variations should be fully explained in purchase specifications. Capacitors made without special attention to the low temperature characteristics perform satisfactorily at sub-zero temperatures except for a brief initial starting period.

Humidity

The presence of moisture is necessary to electrolytic action. The electrolyte in the capacitor contains a certain predetermined quantity of water and the stability of this moisture content is desirable.

All standard types of capacitor constructions are designed to include ample provision for effective sealing. Such capacitors are unaffected by extreme changes in humidity.

In cases where off standard specifications do not allow ample space for correct sealing, then changes in humidity may affect the moisture content of the electrolyte.

Excess moisture in the electrolyte accelerates any tendency for corrosion and lowers the sparking voltage. A deficiency of moisture causes a drop in capacity and an increase in series resistance at low temperatures.

A stabilized moisture content is easily provided when the proper attention is paid to design.

Gas Pressure

During the anode forming process, hydrogen and oxygen are liberated, and these gases are driven out before the completion of the unit. Well made capacitors operated within their ratings do not generate these gases in sufficient quantities to be considered.

Gas pressure is generally developed through abuse of the capacitor and it is apt to force the electrolyte out of the container. It is believed that surge voltage break-downs are due to the ignition of the hydrogen and oxygen gases generated when the capacitor is overloaded.

When a capacitor is subjected to reversed polarity the cathode foil tends to form. Capacitors subjected to voltage overloads act as though the original formation process was being continued to a higher voltage. In both cases gas and heat will be generated in a short time if the abuse is continued.

Similarly, a capacitor with a very poor shelf life characteristic might act along the same lines if it had previously been out of service over an extended period.

Well made capacitors require no special venting feature, as what little pressure might be generated due to long idle or short overloads, normally expected in service, is automatically dissipated without damage.

Corrosion

Correctly designed and properly processed capacitors made with high purity materials are free from the danger of corrosion.

Raw materials of even greater purity than U.S.P. standards are not only desirable, but necessary, and must be purchased in large quantities to insure this extra quality at a reasonable premium from an economic standpoint. The inspection tests given to raw materials of such high purity present problems that require delicate instruments and experienced laboratory control for their successful accomplishment.

Production from the raw materials to the finished capacitor must be carefully and systematically guarded from a cleanliness standpoint.

Normal Life

A capacitor operating within its normal rating continuously and without interruption on pure D.C., would function satisfactorily until the moisture content of the electrolyte had been dissipated. The loss of this moisture would eventually cause a drop in capacity and an increase in the series resistance until the unit developed an open circuit characteristic. The leakage current would gradually drop to a very low figure—practically zero.

This represents an ideal condition with respect to life, and since its termination is principally due to the rate of evaporation of water, which would be affected to a large extent by the effectiveness of the sealing, the capacitor should last many years.

The nearest approach to this condition in actual service would represent operation on pure D.C., but with interrupted use. Assuming that the capacitor is operated within its normal rating, it would closely follow the general trend indicated in the previous paragraph. If the capacitor was of poor quality or the idle period abnormally extended, it would act as described under "Initial Leakage," and the theoretical life would be affected. This would be due to internal temperature rise, causing more rapid evap-

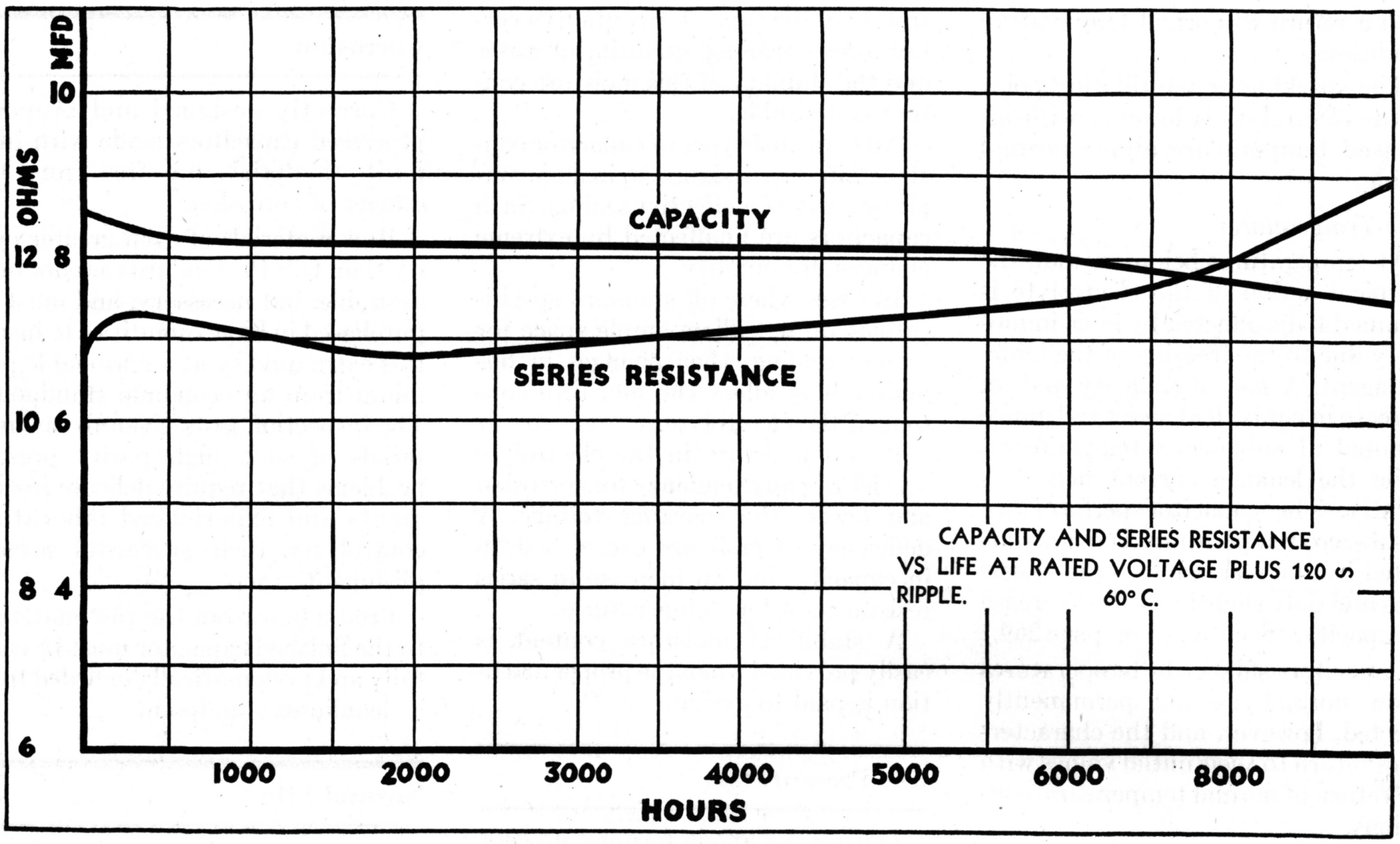

FIG. 37—*Capacity and Series Resistance vs. Life*

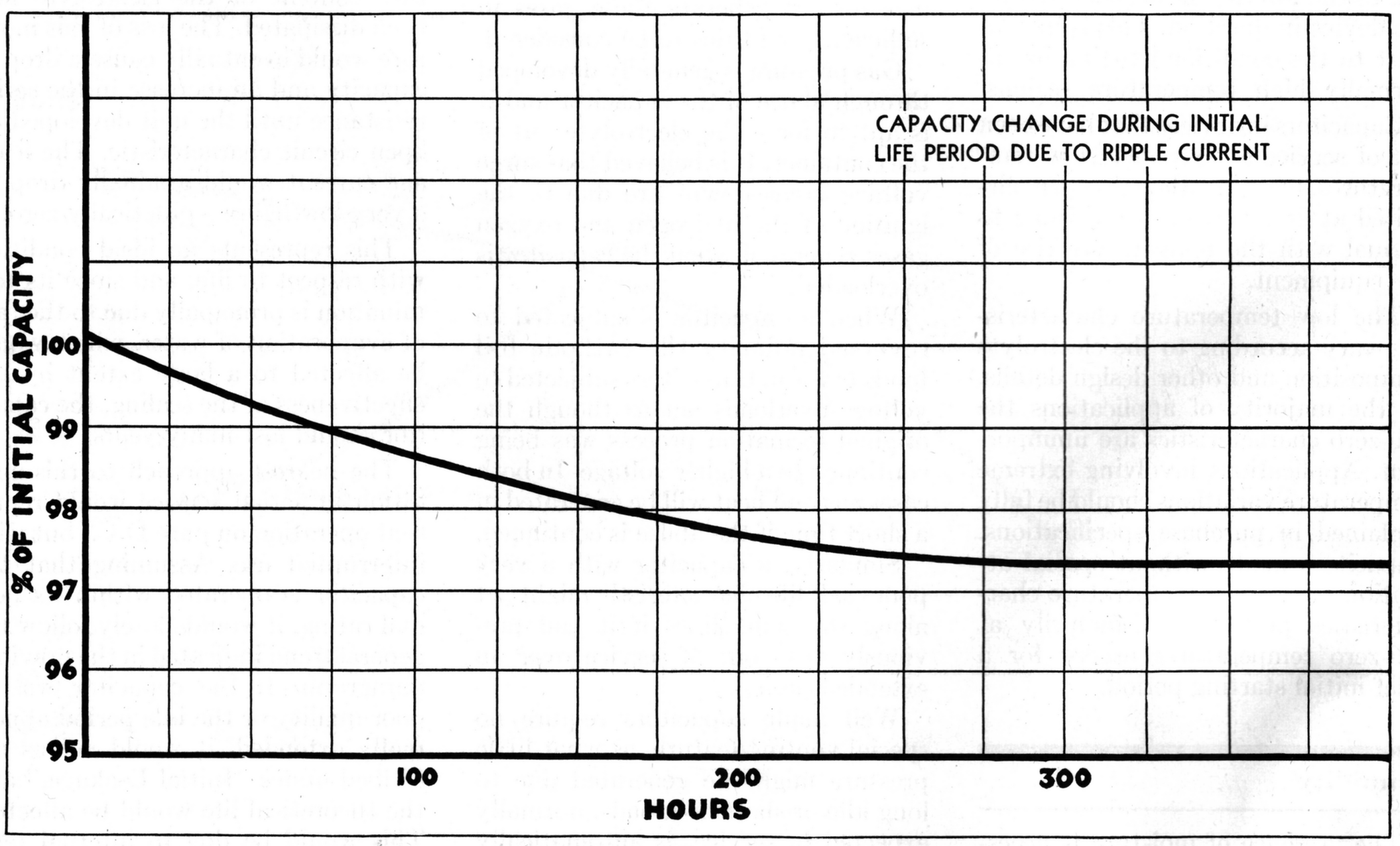

FIG. 38—*Effect of Cathode Formation on Capacity*

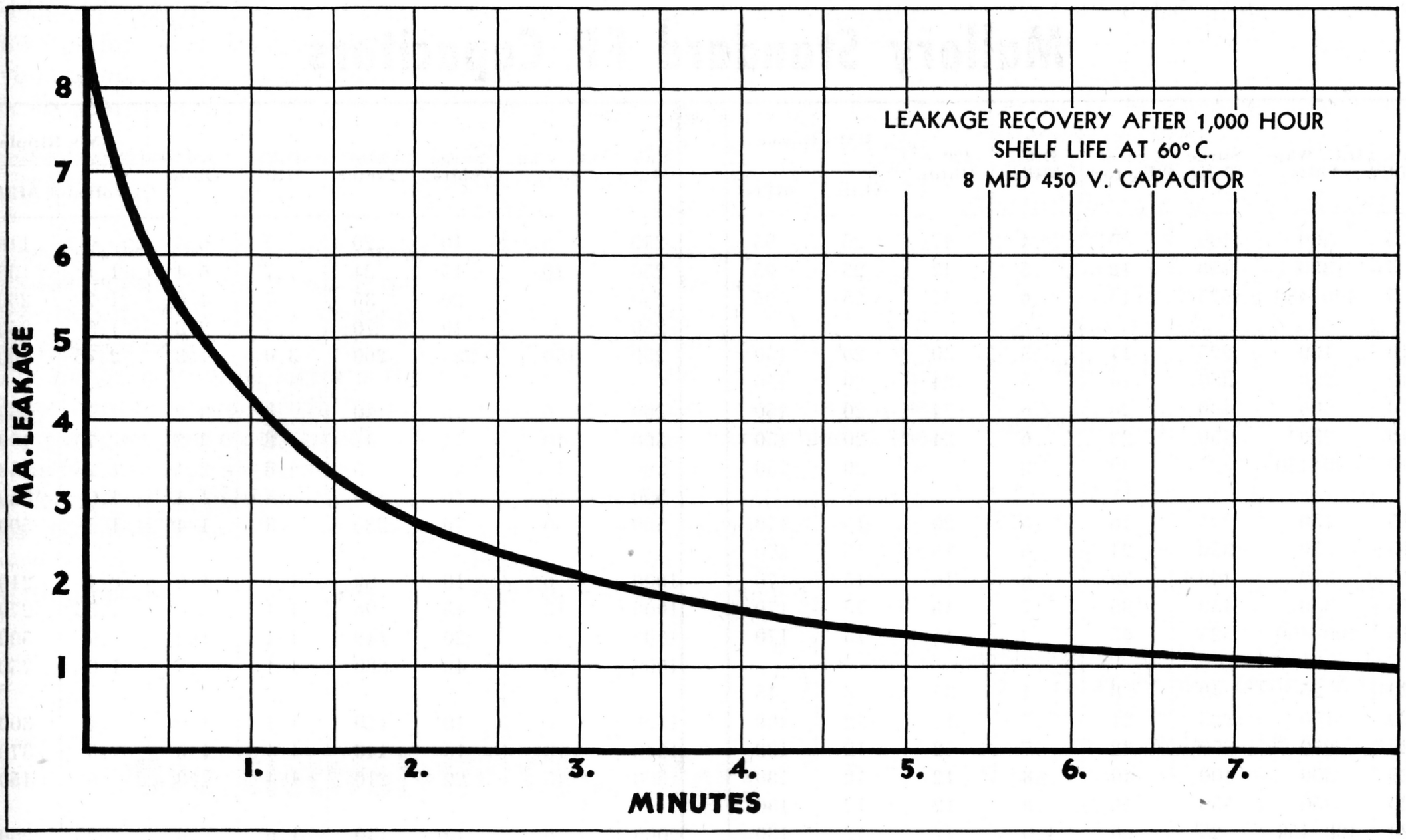

FIG. 39—*D. C. Leakage vs. Shelf Life*

oration of the water content and, in severe cases, gas formation.

It is more important, however, to base life predictions on D.C. applications involving an A.C. component, or superimposed A.C. ripple voltage, as this represents the usual and more severe service. The introduction of an A.C. component affects practically every characteristic to varying degrees, but in reading the following, it should be borne in mind that properly processed capacitors, designed with the full knowledge of the conditions encountered, function perfectly satisfactorily in such service when kept within their normal ratings.

Where A.C. components are involved, the cathode tends to form up and become coated with a film similar to the anode film. The thickness of this film, however, is extremely thin as compared to the anode film since it is directly dependent on the relatively small value of the ripple voltage.

On life test, the major effect noted is a slight and gradual loss in capacity until the cathode has reached its maximum formation, after which it ceases to directly affect the capacity characteristics. This drop in capacity is due, of course, to the fact that capacitors in series produce a final capacity less than the smallest capacity involved. Due to the extreme thinness of the cathode film, the capacity thus developed is of tremendous value as compared to the anode capacity, which explains the slight overall reduction in the capacity of the unit itself.

The foregoing action is a normal characteristic of all capacitors of this type and does not affect their life expectancy.

The I^2R or watt loss of the capacitor, due to the ripple current, is of major importance since it produces internal heat, which in turn affects other characteristics.

An increasing series resistance and an increasing leakage current with age increases the watt loss. These characteristics should be closely watched on comparative life tests.

The leakage current, since it increases with temperature, is extremely important. The quality of the anode film and the chemical characteristics of the electrolyte are the major controlling factors with respect to the leakage current.

The controlling factors with respect to the equivalent series resistance characteristic are the contact resistance between the electrolyte and the anode film or cathode foil, the resistance of the electrolyte, and the leakage current. All of these factors are affected by temperature, so that the resultant, the equivalent series resistance, is also greatly affected by temperature.

Corrosion, already explained at length under the paragraph so headed, is naturally an important feature with respect to life.

It is obvious from the foregoing, that abnormal temperatures affect the life by accelerating detrimental changes of the major characteristics.

Accelerated life tests run under severe conditions clearly indicate that properly manufactured Dry Electrolytic capacitors will give many thousands of hours of satisfactory service. At this writing actual tests of this sort have been conducted for well over 20,000 hours.

Naturally, it is difficult to estimate what these accelerated tests would represent in normal service, but it is safe to say that carefully made capaci-

Mallory Standard FP Capacitors

Cap. Mfd.	D.C. Wkg. Volts	Surge Volts	Size Factor	D.C. Mills	120 ~ Ohms	RMS Ripple	
						Volts	Mills
5	300	400	10	.4	47	25	95
5	350	450	12	.5	47	25	95
5	400–450	525	15	.6	47	25	95
10	150	225	11	.5	30	20	150
10	250	350	16	.5	24	20	150
10	300	400	20	.6	24	20	150
10	350	450	23	.6	24	20	150
10	400–450	525	30	.8	24	20	150
15	150	225	16	.6	20	15	170
15	250	350	24	.6	16	15	170
15	300	400	30	.6	16	15	170
15	350	450	35	.7	16	15	170
15	400–450	525	45	.9	16	15	170
20	25	40	8	.4	35	3	45
20	150	225	21	.7	15	12	180
20	250	350	32	.7	12	12	180
20	300	400	40	.8	12	12	180
20	350	450	46	.8	12	12	180
20	400–450	525	60	1.0	12	12	180
30	150	225	31	.8	10	9	200
30	250	350	48	.8	8	9	200
30	300	400	60	.9	8	9	200
30	350	450	69	.9	8	9	200
30	400–450	525	90	1.1	8	9	200
40	25	40	15	.6	17	3	90
40	150	225	41	.9	7.5	7	210
40	250	350	64	.9	6	7	210
40	300	400	80	1.0	6	7	210
40	350	450	92	1.0	6	7	210
40	400–450	525	120	1.2	6	7	210
50	150	225	52	1.0	6	6	230
50	250	350	80	1.0	4.75	6	230
50	300	400	100	1.0	4.75	6	230
50	350	450	115	1.1	4.75	6	230
50	400–450	525	150	1.3	4.75	6	230
80	150	225	82	1.3	4	5	300
80	400–450	525	240	1.6	3	5	300
100	10	15	10	.7	16	2.5	125
100	15	20	14	.7	12	3.0	170
100	25	40	28	.7	7	3.25	225
100	150	225	104	1.5	3	4.5	340
125	350	450	280	2.0	2	4.5	450
150	250	350	240	2.0	1.6	4.0	450
200	6	10	16	.7	8	1.0	90
200	10	15	19	.7	8	1.1	110
200	15	20	28	.7	6	2.0	200
200	25	40	56	.7	3.5	2.0	200
250	6	10	20	.7	6.4	.9	110
250	10	15	24	.7	6.4	1.1	135
250	15	20	35	.7	4.8	1.7	250
250	25	40	70	.7	2.8	1.5	250
250	150	225	260	3.0	1.3	2.75	500
500	6	10	40	.8	3.2	.5	150
500	10	15	47	.8	3.2	.75	190
500	15	20	70	.8	2.4	1.25	350
500	25	40	140	.8	1.4	1.0	350
500	50	70	280	.8	1.4	1.5	500
1000	6	10	80	1.1	1.6	.4	210
1000	10	15	96	1.1	1.6	.55	270
1000	15	20	140	1.1	1.2	.9	500
1000	25	40	280	1.1	.7	1.0	750
1500	6	10	120	1.4	1.0	.4	300
1500	10	15	140	1.4	1.0	.5	370
1500	15	20	210	1.4	.8	.5	450
2000	6	10	140	1.6	.8	.25	250
2000	10	15	190	1.6	.8	.35	350
2000	15	20	280	1.6	.6	.5	550
3000	6	10	210	2.1	.5	.4	600
3000	10	15	280	2.1	.4	.4	700
4000	6	10	280	2.6	.4	.25	500

To determine the proper standard container size for any FP capacitor, add the size factors, as listed in the above table, for all of the sections included in a single container. Then using the proper heading (single, dual, triple, quad), select the smallest size container which will accommodate the total size factor. Total container size factors in following table are maximum.

EXAMPLE:

5 mfd. 450 volt	15	(size factor)
15 mfd. 400 volt	45	(size factor)
20 mfd. 25 volt	8	(size factor)
	68	(total size factor)

Under column headed "triple," note that the 1″ diameter 3″ long container with a 128 total container size factor is the smallest container which will accommodate 68 total size factor. The 1″ diameter 2″ long container (size factor 64) is too small for this combination.

CONTAINER SIZE FACTOR

Container Size	Single	Dual	Triple	Quad
¾″ x 2″	32			
1″ x 2″	68	66	64	
1″ x 3″	136	132	128	
1⅜″ x 2″	140	135	128	123
1⅜″ x 3″	280	270	255	245

FIG. 40

tors should give many years of satisfactory performance. Many thousands have been operating satisfactorily for over six years in the field.

Shelf Life

The shelf life of a capacitor represents the length of time it can be out of service, without detrimental change in its characteristics.

The major controlling factor is the leakage current characteristic which in turn is dependent on the quality of the anode film, and any tendency of the electrolyte to dissolve this film when the polarizing voltage is removed.

With proper care and knowledge in the manufacture of the capacitor, these characteristics may be easily controlled.

Well made capacitors may be expected to quickly return to normal characteristics after several months to a full two years of idle period.

For those who are interested in technical ratings covering D.C. working voltage, surge voltage, leakage current, series resistance at 120 cycles, and A.C. ripple values, as well as capacitor size requirements in type FP capacitors; we have included the characteristic chart of Fig. 40. The column headed D.C. Mills refers to normal leakage current while the one headed 120 ohms, refers to the series resistance at that frequency.

Dry Electrolytic Capacitors Test Section

Life tests and production acceptance tests might be considered unnecessary effort and expense if it were possible to have absolute confidence in all suppliers. However, no one can be considered infallible and consequently, it is accepted practice in industry to carry on a varying amount of this work, depending upon the nature of the product, the prestige of the supplier and the relative importance of the component part to the finished product.

It is important that the normal electrical characteristics of Dry Electrolytic capacitors be known and the tolerances understood in order to insure intelligent application. These measurements are also necessary to determine the quality and adaptability of condensers of both conventional and new types of construction. It is intended to outline in this text the various methods of measuring each characteristic of Dry type electrolytic condensers so that the engineer can choose those that are most adaptable or necessary to his needs.

Leakage

The direct current leakage of an electrolytic condenser should be measured at its rated working voltage after it has been subjected to that potential for a period of five (5) minutes to allow the leakage to come down to a stable value.

Fig. 41 shows a suggested circuit for measuring leakage. This may be modified within limits dependent upon the equipment available or the allowable cost.

Capacity

Capacity measurement of electrolytic capacitors should be made with an A.C. voltage of either 60 or 120 cycle frequency, not in excess of the maximum rated ripple voltage, plus a D.C. polarizing voltage equal to the rated operating voltage. However, if rapid readings are made, the polarizing voltage may be removed without resulting in damage to the capacitor or error in measurement.

Figs. 42 and 43 show two circuits for measuring capacity by the impedance method. Fig. 43 is an adaptation of Fig. 42 wherein the polarizing voltage is not used.

The A.C. milliameter should be of the rectifier type as the relatively high reactance of a dynamometer, or iron vane type instrument will affect the accuracy of the measurements.

Either of the two circuits shown for the impedance method of measurement, can have the A.C. milliameter scale calibrated directly in microfarads providing the A.C. voltage is constant within the degree of accuracy desired.

This method is the most adaptable to large scale rapid production testing.

The values obtained represent impedance rather than capacity reactance. However, any error due to the difference between these values is small for capacitors of low power factor.

Equivalent Series Resistance

Fig. 44 shows a bridge circuit for measuring both capacity and power factor, or equivalent series resistance. Bridge measurements are not as rapid as can be made with the other method but are more accurate and split up the impedance into its two components—capacitive reactance and equivalent series resistance.

The polarizing voltage is necessary to obtain correct values of equivalent series resistance since part of this loss is made up of the leakage current through the capacitor.

Radio Frequency Impedance

Impedance measurements can be made with fair accuracy throughout the broadcast and intermediate frequency range using the circuit shown in Fig. 45.

Thermo-couple errors affect the accuracy at the higher frequency so that it is difficult to obtain accurate values at frequencies about five megacycles. However, comparative readings made at the higher frequencies by this

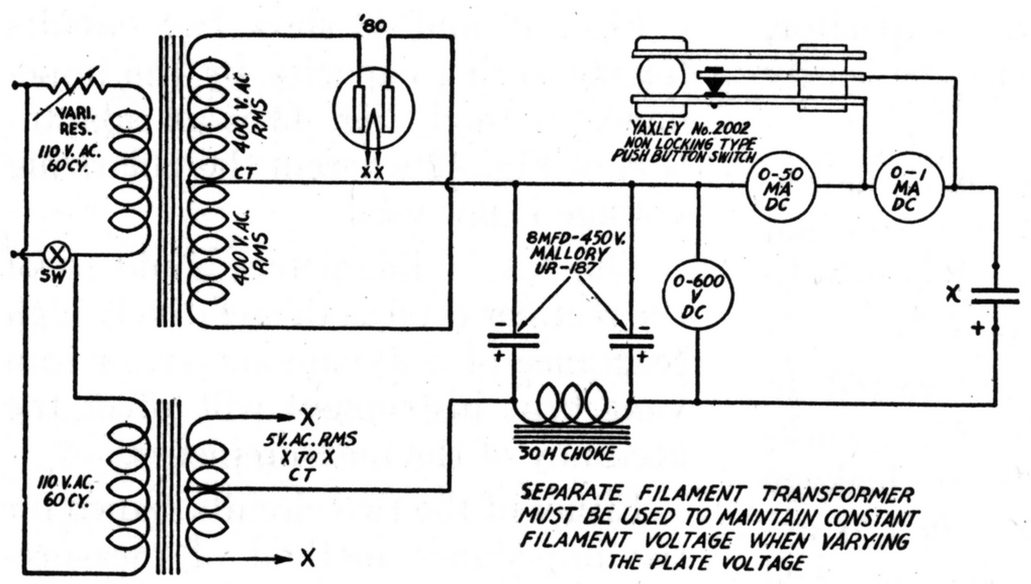

FIG. 41

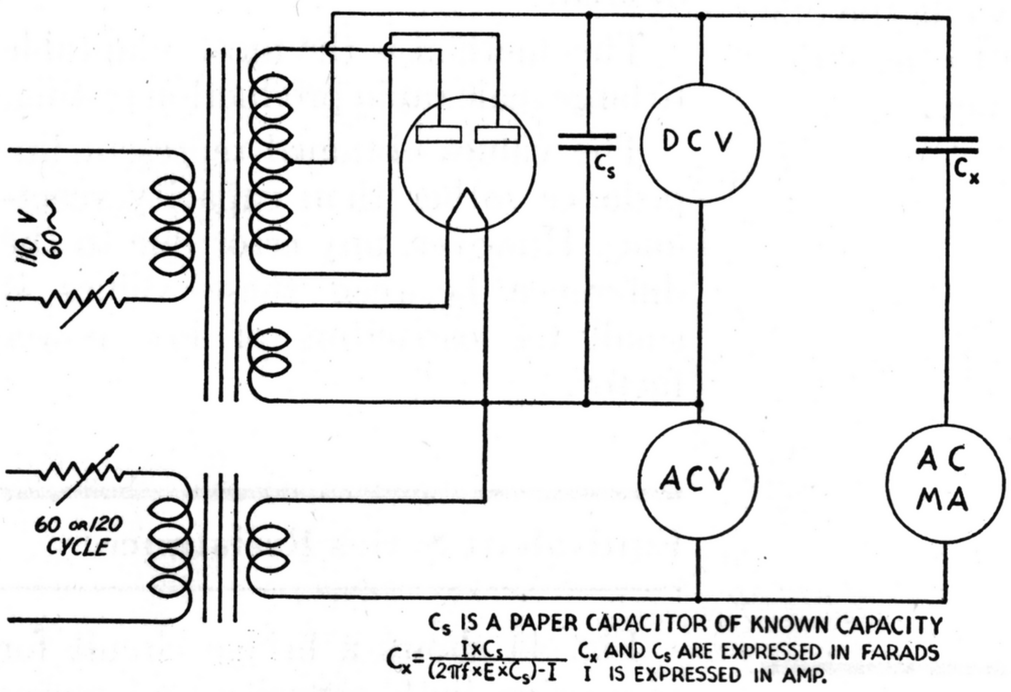

FIG. 42

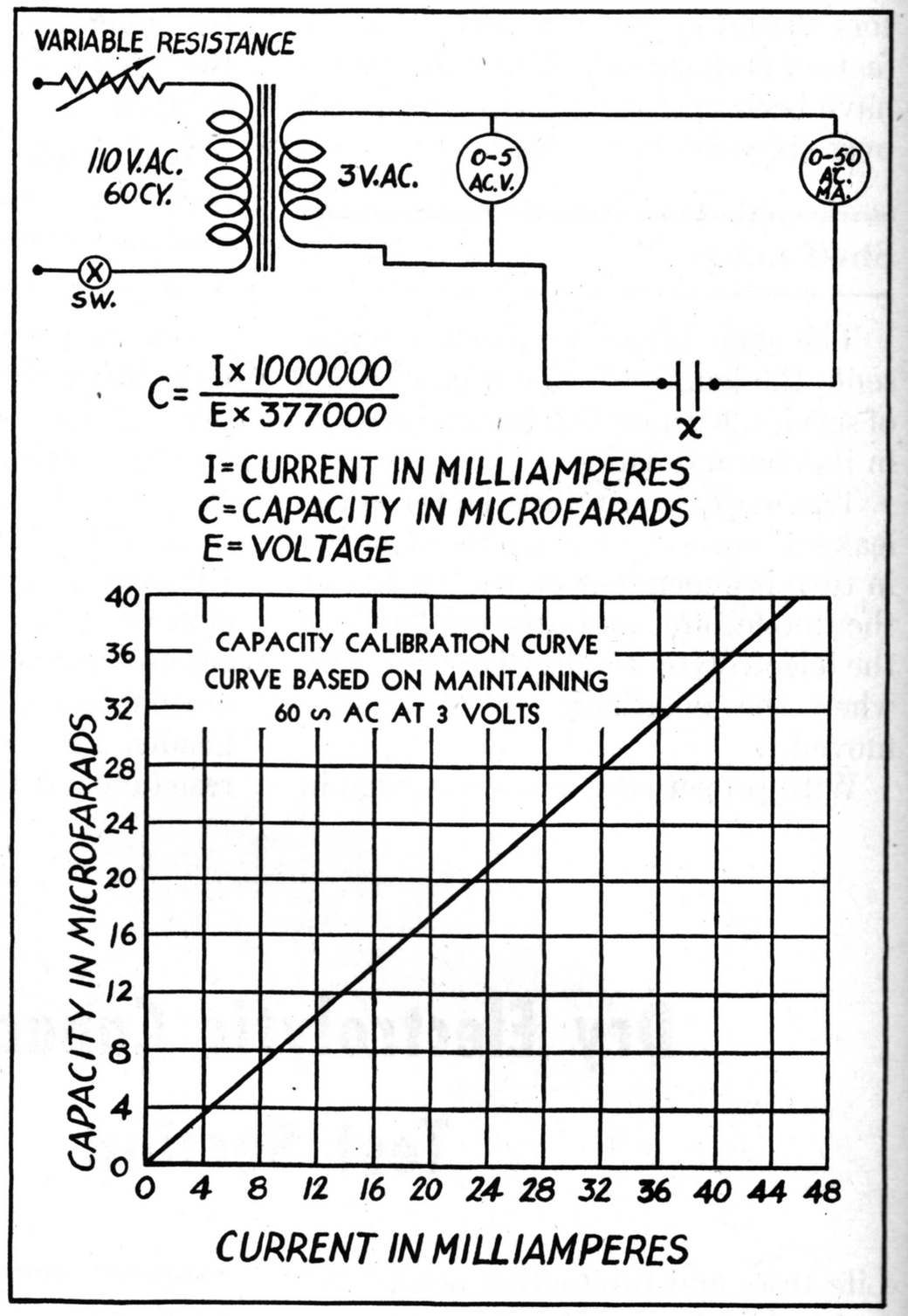

FIG. 43

method are reliable so that it is satisfactory for rapid production testing of the high frequency impedance characteristic.

Accurate laboratory measurements to obtain actual values at the higher frequencies should be made with a Q-meter.

Life Tests

Electrolytic capacitors should be life tested at elevated temperatures equivalent to the maximum condition which they encounter in service and at rated D.C. operating voltage plus a peak 120 cycle ripple voltage corresponding to the rating of the capacitor under test.

If 120 cycle power is not available, higher ripple voltages of 60 cycle frequency should not be used to obtain the same capacitor current as this would subject the capacitor to a total peak voltage in excess of its rating.

Life test ovens should be constructed with baffles to prevent direct radiation from the heating elements and capacitors under test should be spaced from one another, rather than grouped together, to prevent localized heating.

Measurements of leakage, capacity and equivalent series resistance taken initially, at 100 hours, 500 hours and 1,000 hours will suffice to judge the quality of any capacitor of standard design. Capacitors should be cooled to 24° C., when recording the values of each characteristic.

Continuous life tests at 85° C are generally unreliable since this temperature is close to the maximum limit a capacitor can withstand without appreciable change in characteristics. There is seldom an application in field service that requires the capacitor to operate continuously at 85° C. and at the maximum voltage rating simultaneously.

Therefore, 85° C. life tests should be altered to more nearly approach actual operating conditions although they may be accelerated.

It is recommended that such life tests be conducted at 90% of the D.C. rating plus allowable ripple and that the temperature be applied intermittently. The temperature should be applied for four hours at 85°, then allowed to reduce to 60° over a period of eight hours, and repeat. On this schedule, the capacitors will be subjected to 85° for eight hours and to 60° (plus) for sixteen (16) hours for each 24-hour cycle.

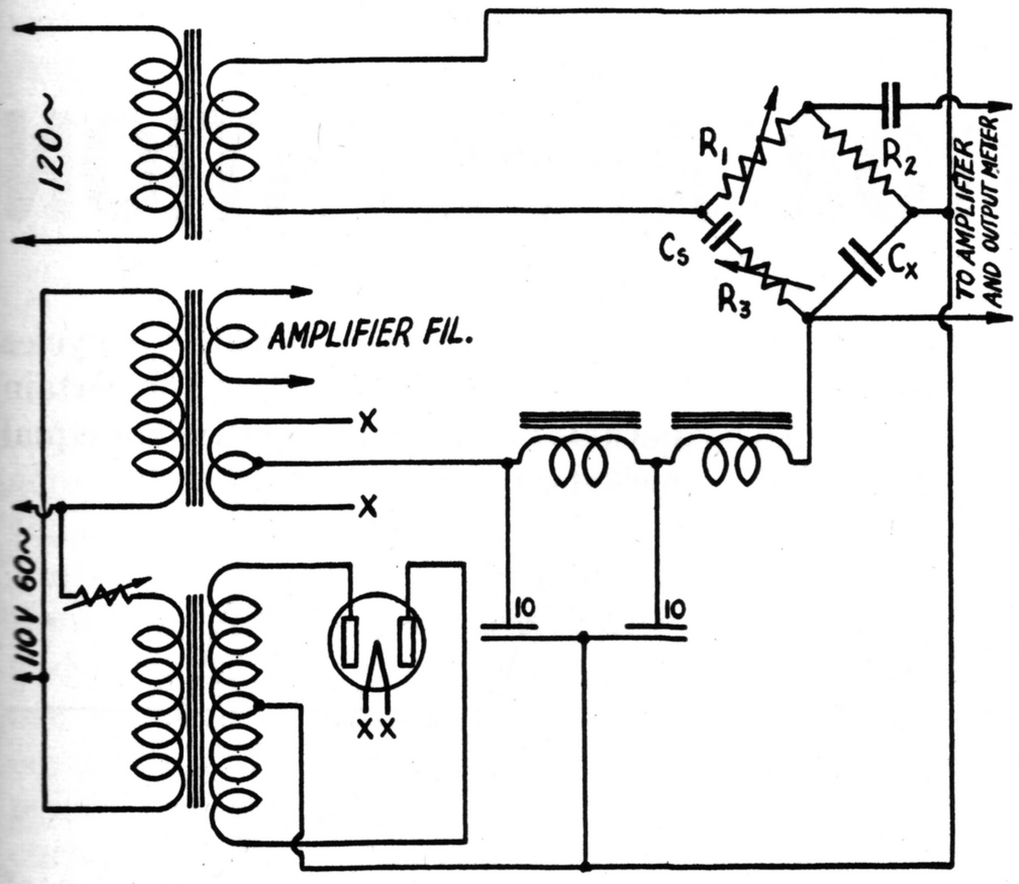

FIG. 44

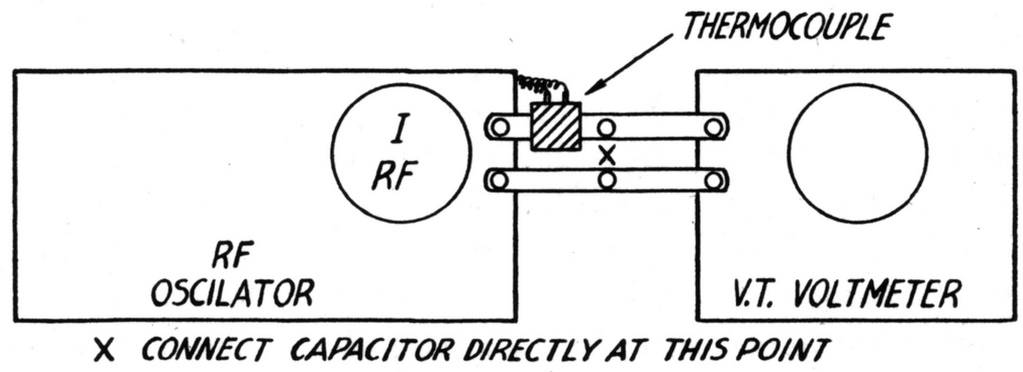

FIG. 45

Measurement of Coupling

Common coupling in properly designed multiple section capacitors should be negligible and eliminate circuit oscillation, or hash interference difficulties from this source.

If present, this characteristic is caused by either capacitive or resistive coupling and it is possible to measure the coupling as shown in the diagram.

Capacitive coupling is generally caused by interanode capacitance where the capacitor cartridge was rolled carelessly allowing the anodes to protrude slightly over the cathode foil.

Resistive coupling is caused by:

1. The IR drop through the long cathode foil which must act as a common ground return for all included sections.
2. Contact resistance between the cathode foil and the external cathode terminal.
3. Long lead from cathode to ground either inside or outside of the capacitor.

Mallory FP capacitor cartridges are carefully wound to reduce the possibility of interanode capacity from poor plate alignment. The entire roll of cathode plate is short circuited at the bottom, eliminating inductance (which also effects the R.F. impedance) and greatly reduces any IR drop in the cathode foil. An exceedingly short cathode tab, which is welded to the mounting ring (cathode terminal) provides a minimum of resistance in the common lead to ground.

The circuit shown is self explanatory and provides an easy method for comparison of coupling under given conditions between various capacitors.

Values of potential and limits of coupling are not shown, since the choice of measuring potential, frequency and coupling limits depend on application conditions.

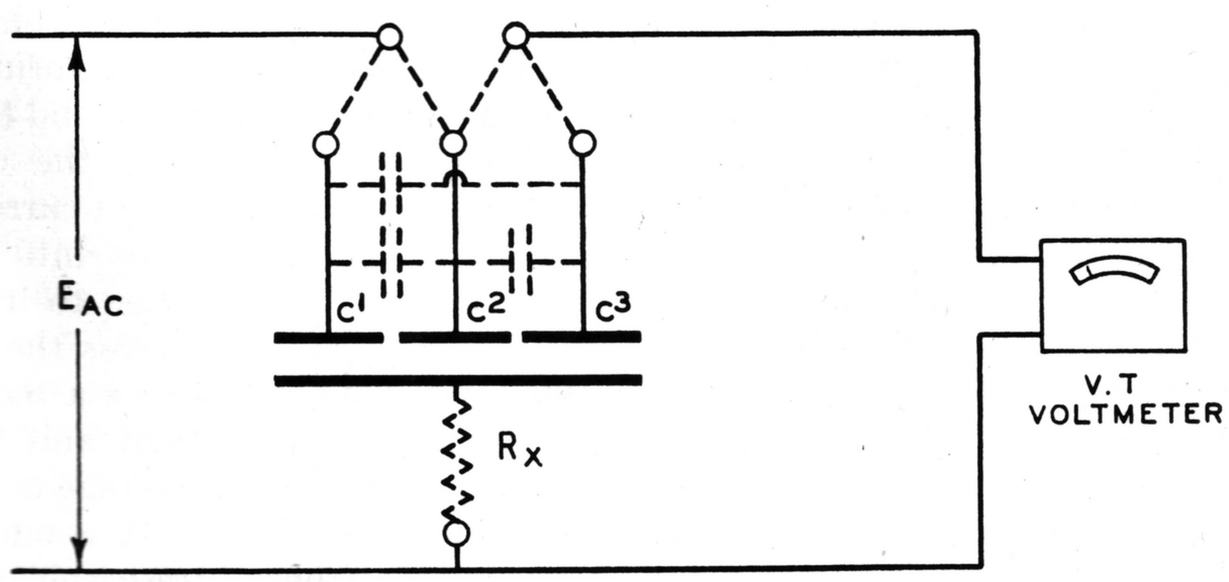

MEASUREMENT OF COUPLING

ELECTROLYTIC CAPACITOR APPLICATION

Generally speaking, there are two main uses for electrolytic capacitors in radio receivers or similar electronic equipment. The first, and at this time most important application, is that of a filtering agent to help convert pulsating direct current into a smooth, even supply for vacuum tube plate potential. The second use is that of by-pass service in audio frequency circuits. This application usually requires capacity values slightly larger than that for high voltage filter service. However, since the voltage for operation is rather low it is possible to obtain almost any capacity necessary for by-pass service in a capacitor of reasonable physical size.

When the electrolytic capacitor is employed in the high voltage filter application, the current to be filtered is obtained by rectifying alternating current of suitable voltage. There are a number of different type rectifiers but the one normally used for high voltage "B" supply is the thermionic rectifier tube, employed in either the half wave or full wave rectifier circuit.

Half-Wave Rectifier

Figure 46 illustrates the connections of a "half wave" rectifier. This circuit is seen to consist of a transformer and half wave rectifier tube. The transformer serves to supply the necessary high voltage alternating current. One side of the high voltage winding connects to the plate of the tube and the other side to ground or common.

The filament of the tube is lighted by the current obtained from the low voltage winding on the transformer. The high voltage winding of the transformer, as previously mentioned, supplies an alternating current. Alternating means that the polarity, or direction of current flow, reverses itself periodically. First one side of the transformer is positive, then the other. The voltage will rise to a peak and then fall to zero, at which point the polarity reverses; i.e., the side which was positive will now be negative, and the voltage will again rise to a peak value and fall to zero. This completes one cycle of the current. The general frequency of supply current is 60 cycles per second.

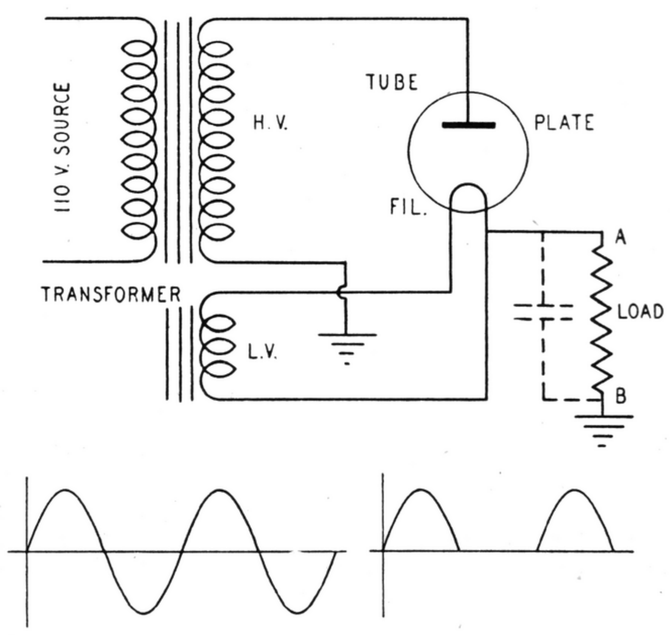

Fig. 46

Figure 47 shows the voltage applied to the plate during the half-cycle wherein the plate is positive in respect to ground.

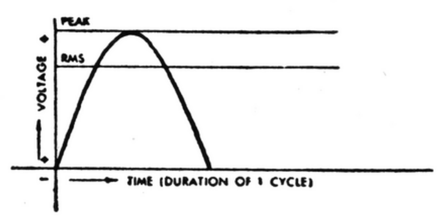

Fig. 47

Notice that the voltage gradually rises to a peak value and then falls to zero. If we should connect a voltmeter across the transformer it would not indicate the peak value, but rather the "RMS" value, which means—the root mean square voltage applied to the plate of the tube.

When the plate is positive, electrons are attracted from the filament. The electrons flowing from the filament to the plate constitutes a current, the value of which depends on the voltage applied to the plate. Therefore the current is seen to rise and fall with the voltage applied to the plate. When the plate of the tube is negative in respect to the filament, there can be no current flow because the plate must be positive in order to attract electrons from the filament.

Fig. 48 shows that during two cycles the plate will be positive for certain periods of time and negative for equal periods.

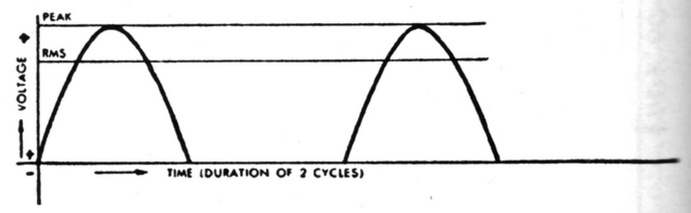

Fig. 48

From our previous explanation of the action in the tube, and from Fig. 48, we see that during two cycles of the supply voltage, the tube will deliver current for two periods of time, which is equal to the length of time during which the plate is positive, and that there will be a lack of current during two periods of time in which the plate is negative. Thus—we see that for a half-wave rectifier we will have regular periods of current flow, each of which is followed by a period of time during which no current flows.

This, of course, is far different from the steady "Direct Current" plate supply, which is required to give successful operation of a radio receiver. A voltmeter connected across points "A" and "B" of Fig. 46 would show the average voltage existing across the load connected to points "A" and "B." This average voltage would be far below the RMS voltage supplied by the transformer, because of the periods of time during which there is no current flowing in the circuit.

If by some means we could provide a reservoir, which would absorb current during the periods of current flow, and then feed this stored current into the circuit during the periods when current is not flowing from the tube into the circuit, we would be able to raise our average voltage across the load. We would, in effect, have a more continuous flow of current and therefore a higher average voltage across the load.

A condenser provides just such a reservoir, and when connected across the load as in Fig. 46, it will act ex-

actly as the imaginary reservoir action described.

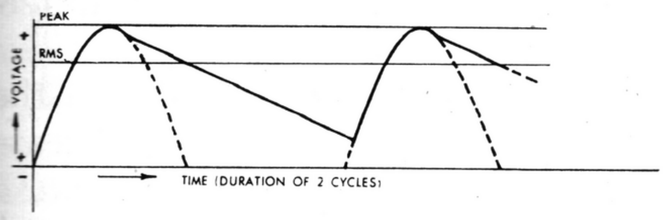

FIG. 49

Fig. 49 is a graph of the voltage across the load resistor shown in Fig. 46, as plotted on the basis of time. The two heavy and dotted curves show the voltage supplied by the tube, and the slanting line shows the voltage which would be supplied to the circuit by a condenser connected from points "A" to "B." It will discharge current into the circuit during the time the charging voltage is falling, and this discharge continues until the condenser is either entirely discharged or until a charging voltage is again applied to the circuit by the rectifier tube.

Inasmuch as the quantity of current is determined by the amount of load, it is easy to see that a very large condenser would be required to totally "fill in," or supply voltage to the circuit during the entire period of time in which the rectifier tube plate is negative.

In order to further smooth out the current, it will be necessary to provide some means whereby we can "hold down" the peaks, so that we may take full advantage of the action; i.e., the "holding up" or maintenance of current supplied by the condenser. This operation will be covered later in this text.

Full-Wave Rectifier

The full wave rectifier operates in exactly the same manner as the half wave rectifier, with the exception that the full wave rectifier enables use of both halves of each cycle of current.

It has been pointed out in the description of the half wave rectifier, that current flowed for a certain length of time and then was absent for an equal length of time, due to the second half of the cycle being of reversed polarity. However, the full wave rectifier enables us to use the other half of the cycle, to fill in holes which exist in the output of the half wave rectifier.

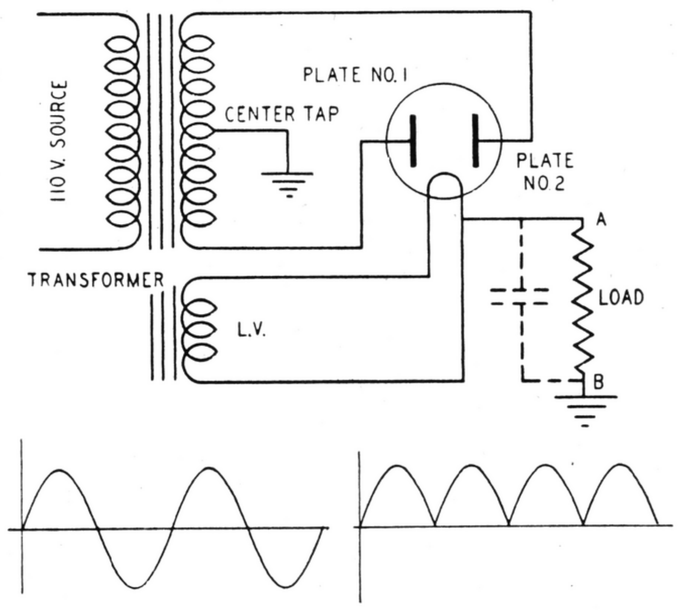

FIG. 50

Fig. 50 shows the circuit of a full wave rectifier. A transformer supplies the high voltage, to be rectified, and the low voltage for lighting the filament of the rectifier tube. Note that the high voltage winding is tapped at its center. This center tap of the transformer provides a return path common to both sections of the high voltage winding.

The high voltage winding is arranged to supply a voltage between the two ends of the winding, which is twice the value of the voltage required across the load. The reason for this is that only half of the winding is used at a time; therefore, each half of the winding has to supply the desired output voltage.

The tube shown in Fig. 50 has one more plate than the tube shown in Fig. 46, however, the tube action is identical. Thus—current will flow from the filament to that plate which is positive, but not to the plate which is negative.

For explanation, let us assume that plate No. 1 is positive. Therefore, plate No. 2, since it is connected to the other end of the high voltage winding, is negative. Current will flow from the filament to plate No. 1 (but not to plate No. 2), and complete the circuit by leaving the center tap and going through the chassis and load, back to the filament. We will call this the "first action."

In our previous study of the half wave rectifier, it was pointed out that the current and voltage rises, to a peak, and falls to zero and reverses polarity, rises to a peak and again falls to zero, to complete one cycle. Therefore, in the first action, the voltage across the load (because of the current flowing through the plate No. 1), will gradually rise to a peak and then fall to zero. This is shown in Fig. 51.

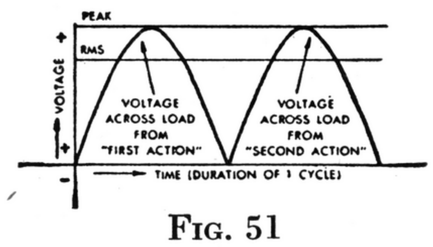

FIG. 51

Remember that when the current supplied by the transformer reaches zero, the polarity reverses. Therefore, for the "second action," plate No. 2 of the rectifier tube, in Fig. 50, will be positive and plate No. 1 will be negative.

As the voltage rises and falls on plate No. 2, there will be a current flow from the filament of the rectifier tube to plate No. 2, and from the center tap of the high voltage winding through the chassis and load, back to the filament, thus completing the circuit.

The voltage across the load will gradually rise and fall. It flows in the same direction as the current obtained in the first action. Therefore, the voltage across the load will rise and fall in the same manner and with the same polarity as that obtained by the first action. This is shown in Fig. 51.

By the use of a full wave rectifier, we have a more continuous current flow, or in other words, we have filled in the holes which we found to exist in the current supplied by the half wave rectifier. This means that we will not have to depend upon an extremely large condenser to maintain the flow of current in the load.

Refer to Fig. 51 and note that we have a period of time, between each half cycle of the supply current, during which the voltage falls to zero. If a condenser is connected across the load, it will discharge current through the load as soon as the applied voltage starts to fall, and it will continue this discharge of current until its voltage falls to zero, or until the condenser voltage is opposed by the rising voltage of the second half of the cycle.

Fig. 52 shows the meeting point between the discharge of the condenser and the increasing charging voltage of the second half of the cycle of current supplied by the rectifier.

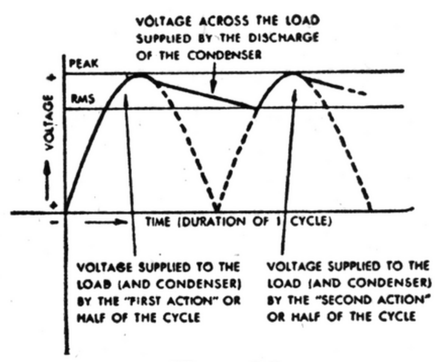

FIG. 52

Compare the shape of the curve, illustrating the D.C. voltage existing across the load resistor, in Fig. 51, with that of Fig. 47. Note that we have twice the number of peaks of current per cycle of the supply current. It will require less capacity to smooth out the current delivered by the full wave rectifier than is required by the output of the half wave rectifier. This is due to the fact that there are more "impulses" of current in the same length of time. A condenser of a given capacity will maintain a higher voltage level, in the load, with a full wave circuit, than in the case of the half wave rectifier circuit, because it needs supply current for much shorter periods of time between impulses of current. This is evident in comparing Fig. 52 with Fig. 49.

The pulsating current obtained from a rectifier, even with a condenser connected to the circuit, is not suitable for "B" supply in a radio receiver or amplifier, because the remaining pulsations or ripple would still give rise to a very strong and objectionable hum in the loud speaker.

Increasing the capacity of the condenser connected across the load, at the output of the rectifier, will not decrease the hum below a certain value, inasmuch as the charging voltage applied to the condenser must fall to a certain extent before the condenser discharges its current into the circuit. Likewise, the charging voltage must rise to a certain extent before it can begin to replenish the charge in the condenser. Thus—we see that we can reduce the "amplitude," which means the height from the lowest to the highest point of the voltage variation, or ripple, by the use of a condenser, but that above a certain value of capacity, depending upon the load and frequency of the supply voltage, there will be no further reduction in the amplitude of the ripple in the current supply. It will be necessary to use some means, in addition to the condenser, to entirely eliminate the ripple from the supply voltage, in order that there may be a pure direct current for use in either the receiver or amplifier. The most convenient means of doing this is by the use of an inductance or more commonly called "choke."

Action of Chokes

The term "choke" has been applied to the component properly named an inductor. This inductor or choke, as preferred, has an electrical property called inductance, an action of opposing sudden increases or delaying sudden decreases of current through the inductor.

Any conductor carrying a current has a magnetic field at right angles to the longitudinal axis of the inductor. This magnetic field extends radially outward from the conductor, a certain distance, depending upon the intensity or amount of current flowing in the conductor. If the current through the conductor is increased, the magnetic field will expand. If the current is reduced, the magnetic field will contract. Thus, we have a moving magnetic field, the direction and speed of motion of which is determined by the rate of increase or decrease of current in the conductor. NOTE—There is no motion when the current is flowing at a steady rate.

A fundamental law of electricity states that when a moving magnetic field cuts through a conductor, there will be a voltage induced in the conductor, the polarity of the induced voltage depending upon the direction of motion of the magnetic field. If we take a straight conductor and coil it, we will have an arrangement whereby if we increase or decrease a current flowing through the coiled conductor, we will have a moving magnetic field, which, due to the proximity of turns, will cut through several conductors; i.e., adjacent turns of the coil. If we increase or decrease the current flowing through a coil of wire, we will have a self induced current in the coil in addition to the applied or driving current. This induced current is of opposite polarity to the applied or driving current. Therefore, an increase of current through an inductor is opposed by the self-induced current in the coil, which is usually called the counter-electromotive force.

In line with this explanation of the action taking place during an increase of current, it is easy to see that a decrease in current will generate a counter-electromotive force which will oppose the decrease in current.

The amount of inductance in a coil of wire is dependent upon the number of turns and the nature of the material used for the core. Air is the poorest material, in that it is not a good magnetic conductor. If we use an iron core, the inductance will be much higher, because iron is an excellent magnetic conductor.

In the discussion of rectifier circuits, it was pointed out that it was necessary to find some means of holding down the peaks of the ripple in the current supplied by the rectifier, so as to obtain a steady flow of current for use as "B" supply in a receiver or amplifier; therefore, it appears that an inductor or choke is ideally suited for this action.

Filter Circuit Action

At this point we are ready to describe the action taking place in a filter circuit; a circuit composed of capacity and inductance which will smooth out the pulsating current delivered by a rectifier; into the pure direct current necessary for "B" supply. Fig. 53 shows the connections of the iron cored inductor choke, and two condensers which comprise the simplest and basic type of filter circuit.

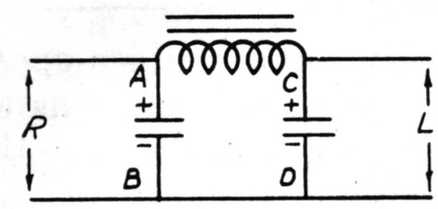

FIG. 53

The letters "R" and "L" in Fig. 53 indicate respectively, the rectifier and load. The condenser at the input has the same action upon the circuit as the condenser described in the chapter on rectifiers. This condenser acts as a reservoir to supply current to the load during the zero current periods in the supply from the rectifier.

The choke in the circuit of Fig. 53 opposes any sudden increase or decrease of current because of its inductance.

At this point, we have a current supplied to a load ("L" in Fig. 53) through a choke which opposes and prevents any sudden increase in the current, and we have a condenser at the rectifier output which will supply current when the rectifier cannot. Thus, the choke prevents the peak of the ripple from getting into the load, and the condenser fills in the hollows in the supply. Or, we may explain the action up to this point by saying that we have reduced the amplitude of the ripple in the current.

Inasmuch as the choke prevents any sudden increase in current, or in other words, maintains a steady current flow, it is necessary to provide a means of supplying current to meet any sudden demand for current made upon the filter. Without such an auxiliary current supply, we would be forced to wait for an increase of current to come through the choke. We have in reality, a need for a reservoir, and a condenser is just such an electrical reservoir. Therefore, we see the reason for the condenser across the load side of the filter circuit shown in Fig. 53.

Before discussing the more elaborate filter systems, the circuit shown in Fig. 54 should be considered.

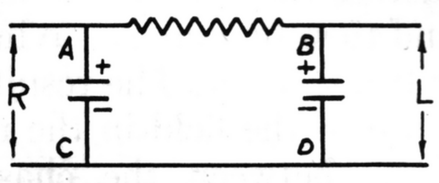

FIG. 54

This circuit is seen to consist of a resistor and two condensers arranged in the same manner as the simplest and the first described filter circuit. This type of circuit is not nearly as efficient as one using a choke. It is much cheaper, as there is a large difference in cost between the price of a resistor and that of a good choke.

The action in this circuit is rather simple, in that the resistor sets up a voltage drop in any current passing through it, the voltage drop being determined by the current flowing through the resistor. For use as a filter, there will be a greater voltage drop in the direct current than there will be in the ripple current, because of the fact that the direct current is greater than that of the ripple current, or, we might state that the DC voltage applied to the resistor is much greater than the ripple voltage. It will require a rather large resistor to give appreciable drop in the ripple current flowing through the resistor, and for this reason, such a circuit can not be used except where the load on the filter is small.

Resonant Element Filter Circuits

Our discussion to this point has been confined to the filter circuit known as the brute force type. However, there is another type of filter circuit wherein use is made of a resonant circuit. Such a resonant circuit type of filter is shown in Fig. 55.

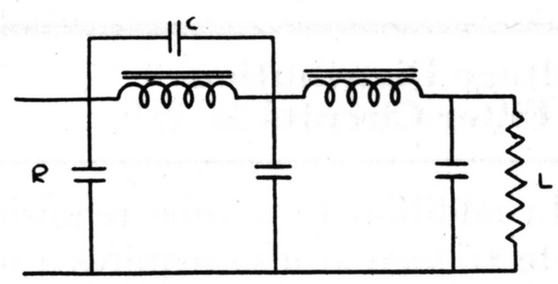

FIG. 55

The capacity of the condenser "C" is so chosen that it tunes the choke to resonance with the hum frequency. The result is that a tuned circuit of this type offers a very high impedance, or more simply, opposition to the hum frequency. The action of this tuned circuit is often described by saying that it absorbs the particular alternating current, in this case, the ripple current, which is applied to it.

The tuned choke type of filter circuit is nearly always used with the full wave type of rectifier, although it is possible, but not convenient or advisable, to use it with the half wave type.

It is well to point out that all filter circuits described have been of the low pass type; i.e., circuits that will pass all frequencies below a certain value and prevent all frequencies above this certain value from passing through the circuit.

The cut-off point, i.e., the frequency below which the filter is ineffective, must be below the frequency of the hum voltage, or ripple, and in good design, it should be below the lowest frequency which will be handled by the audio amplifier receiving "B" supply current from the circuit. In addition, it is very important that the resonant frequency of the filter circuit should not be the same as the frequency of the rectified current—i.e., 60 cycles for half wave rectification, or 120 cycles for full wave rectification, from a 60 cycle supply frequency.

In addition to the low pass type of filter circuit, there is a high pass filter circuit; i.e., one which prevents the passage of all frequencies below the cut-off point, but allows the passage of all frequencies above the cut-off point.

A combination of the high pass and low pass filter would be most effective for use as a "B" circuit filter, provided that the cut-off point of the high pass filter is above the ripple frequency and the cut-off point of the low pass filter is below the ripple frequency. The most effective arrangement of such a combination circuit would be to have the high pass filter between the rectifier and the low pass filter.

An absorption type of filter next to the rectifier is shown in Fig. 56.

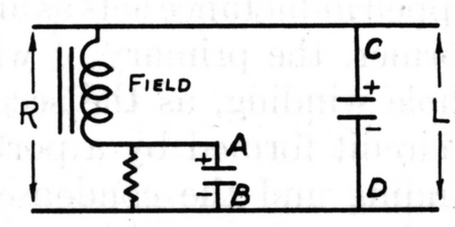

FIG. 56

In this circuit the field coil of a speaker is used as the inductance, which with the capacity of the series condenser, resonates at the ripple frequency. Inasmuch as it is a series resonant circuit, it offers a short circuit for the ripple frequency current. This current is not suitable for use as a field supply. The resistor is shunted across the condenser in order to provide a path for the necessary D.C. current.

The resistor is of a much higher value than the capacitive reactance of the condenser at the frequency involved. The resistor does broaden the peak of resistance of the circuit and this offsets any slight discrepancy in capacity value of the condenser.

Fig. 57 is a more practical, although more expensive, method of using a resonant circuit in a filter.

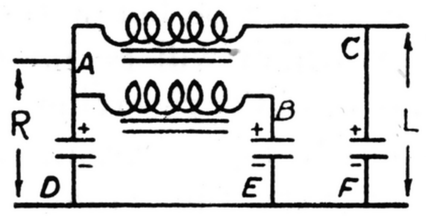

FIG. 57

This circuit shows the use of an inductance and an electrolytic condenser, the sole purpose of which is to short circuit the hum frequency. In some instances, the two chokes shown in Fig. 57 are in reality two windings on a common core. In other words, a transformer. There is a simpler and less expensive way of obtaining the same action. This method is shown in Fig. 58.

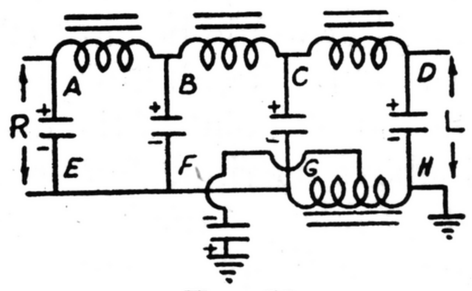

FIG. 58

The portion of the circuit in which we are interested in Fig. 58, is the tapped choke in the negative lead. Note the condenser connected between the chassis and the tap on the choke. The tapped inductance acts as an autotransformer, the primary of which is the whole winding, as the secondary is the circuit formed by a portion of the winding and the condenser connected from the tap to one end (through the chassis) of the winding. The resonant period of this tuned secondary is equal to the disturbing ripple, and therefore, it appears as a short circuit to the ripple frequency, which means that the energy of the ripple frequency is expended in this circuit.

Choke Input Filter

In the preceding text we have discussed the actions which take place in simple filter circuits of the capacitor input type similar to the one shown in Fig. 53.

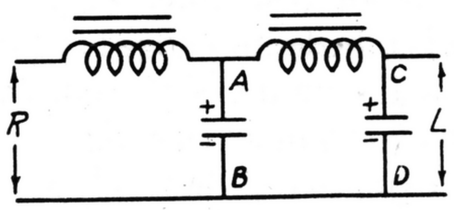

FIG. 59

Fig. 59 shows a circuit wherein there is no condenser connected across the output of the rectifier. This circuit is commonly known as the choke input type of circuit. The choke, which is connected directly to the output of the rectifier, is often termed the swinging choke.

Inasmuch as there is no reservoir action at the input to the filter, there will be a lower output voltage from the filter, because of the hollows in the current supply from the rectifier. Because we have an extra choke over that of the circuit shown in Fig. 53, we will have a much smoother current.

The voltage output of the choke input type of filter circuit is smoother for lower values of load, than the corresponding capacity input type of filter. The voltage is lower except for higher loads. This type of circuit is useful where there is a large variation in load.

Voltage Distribution in Filter Circuits

In addition to a tube requiring a plate voltage, it also requires a negative bias voltage which is applied to the grid. If we can obtain both our plate and bias voltages from the "B" supply, or, in simpler words, make full use of the voltage from the "B" supply, we will be effecting an economy.

Inasmuch as the bias voltage must be negative in respect to the cathode of the tube, we can easily accomplish the action of obtaining both our "B" and "C" bias voltages in the following manner.

Due to the fact that it is convenient to use the chassis as the negative side of the circuit, it is possible to insert a resistance, between the center tap, of the high voltage winding on the power transformer, and the chassis. This will make the center tap of the transformer negative in respect to the chassis. If we connect the cathode, or filament center tap of our tubes directly to the chassis, and connect the grids to the center tap of the transformer, the grid will be negative, in respect to the cathode, by the amount of voltage drop obtained across the resistance.

The voltage drop obtained across the resistance, as outlined in the previous paragraph, is caused by the current in the load, which is the sum of all the plate currents and "bleed" currents of the receiver. The voltage drop across the resistance is equal to the current times the resistance. For any given current, we can obtain any desired negative voltage by selecting the proper value of resistance.

The introduction of the dynamic speaker enabled designers to work a dual purpose, in that the dynamic speaker could be used as the choke. Inasmuch as the magnetic circuit of the field in a dynamic speaker must necessarily include a "gap" (for the movement of the voice coil), we have the makings of a choke, as we have a coil of wire on an iron core, and the core is provided with an air gap.

The use of the field of a dynamic speaker as a choke is economical as the saving in the cost of the choke offsets part of the cost of the speaker.

If the speaker field were placed in the positive lead, the voltage drop across the field would be subtracted from the voltage available from the rectifier, which voltage, of course, would have to be raised to offset this. In addition, if a separate voltage dropping resistor were used, either at the tube or in the negative lead to the transformer, to secure the necessary bias voltage, the rectifier output voltage would of necessity have to be large enough to include this voltage. Therefore, it is natural to utilize the voltage drop across the field as the bias voltage, and thereby make a saving in the power transformer. The result of this is the use of the field in the negative lead; i.e., between the chassis and center tap of the power transformer.

Fig. 60 shows the simplest type of filter circuit wherein the choke is in the negative lead.

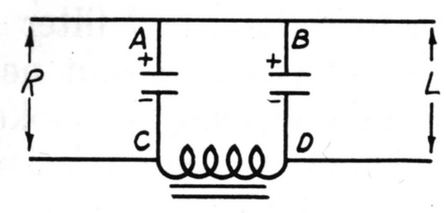

FIG. 60

Because the same filtering action can be obtained with the choke in the negative lead as is obtained with the choke in the positive lead, we can expect to find the same types of circuits as previously described, with the chokes in the negative side of the cricuit instead of in the positive.

Due to the fact that the wattage required to be expended in the field coil may not be of such a value as to give a convenient voltage drop, it is sometimes necessary to adopt the expedient shown in Fig. 61.

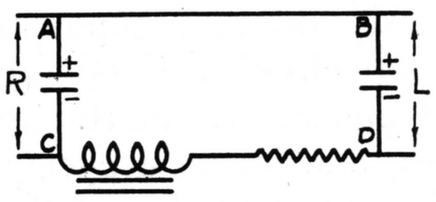

FIG. 61

Here we see the same circuit as shown in Fig. 60, except that there has been a resistance added in series with the choke or the field coil; in order that the voltage drop between the load and rectifier may be sufficient for use as bias voltage. It is of no great importance as to which side of the choke the resistor is connected, inasmuch as the resistor offers an impedance to the ripple voltage, the same as would an inductive reactance of the same ohmic value. In case the voltage drop across the field is too great, a divider network is placed across the field so as to tap off the desired voltage.

Multiple Choke Filter Circuits

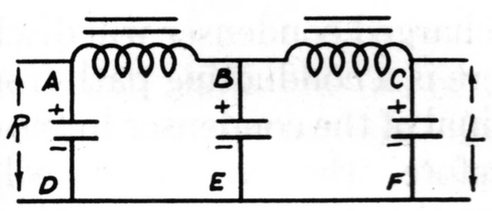

FIG. 62

The circuit shown in Fig. 62 is seen to consist of two chokes with condenser input and output, and in addition, a condenser from the point of connection of the two chokes to the negative side of the circuit. There is in reality two of the simple filter circuits placed end to end with the advantage of a much better filtering action because of two chokes and three condensers.

Since the introduction of the electrolytic condenser with its advantages of low cost and small size for an extremely large capacity, it is rare that one encounters a filter circuit of more than two stages. In older receivers wherein the designers were forced to use paper condensers, which were uneconomical to use in capacity values greater than approximately 2 mfds, it was necessary to use a circuit as shown in Fig. 63.

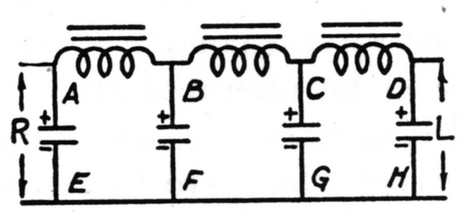

FIG. 63

This three-section filter is seen to consist of three chokes and four condensers. Actually, there are three of the common, or simple, filter circuits placed end to end.

Even with extremely low values of capacity, this circuit is capable of very good filtering, inasmuch as there is an over-abundance of inductance to counteract the usual lack of capacity with the use of low capacity paper condensers.

Complex Filter Circuits

Present-day filter circuit design is for the most part simple and direct. Several years ago, and in occasional cases even today, one may encounter rather complex filter circuits. These circuits often are not as complicated as they may seem at first glance, as they are usually combinations of filter circuits and load distribution circuits with associated by-pass condensers, arranged in such a manner that the schematic of the whole circuit with all the various connections appears rather involved.

Study will enable one to disassemble such a complex circuit into its various functions as to filter and load distribution. These more complex circuits are in reality made up of combinations of the circuits which we have previously discussed.

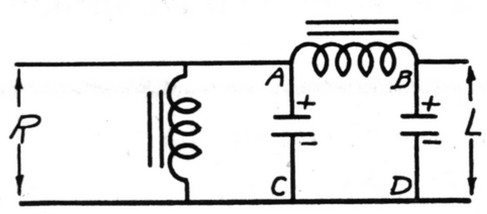

FIG. 64

The circuit illustrated in Fig. 64 is seen to consist of the ordinary single section brute force filter with a choke connected across the filter input. The purpose of connecting a choke, or in reality a field coil, across the circuit at this point is to effect an economy in the filter design. The current supplied to the field coil does not need to be as ripple free as that which is supplied to the plates of the tubes. In addition, the current drawn by the field coil is rather large. If the field coil were connected across the output of the filter, it would increase the voltage drop across the choke, and in addition, would call for a much larger choke (in physical size) to obtain the necessary smoothness in the current to be applied to the load.

The principal use for such a circuit is in A.C.-D.C. receivers, wherein a half wave rectifier is generally used. Since a half wave rectifier requires the use of large capacitors, and a good inductance, any unnecessary increase in these items would be uneconomical.

There is one point which must be borne in mind with such a circuit. The combination of inductance of the field coil, together with the capacity of the input condenser, should not be of such values as to form a tuned circuit resonant at the ripple frequency. Such a tuned circuit in this position would cause a high voltage to be developed across it.

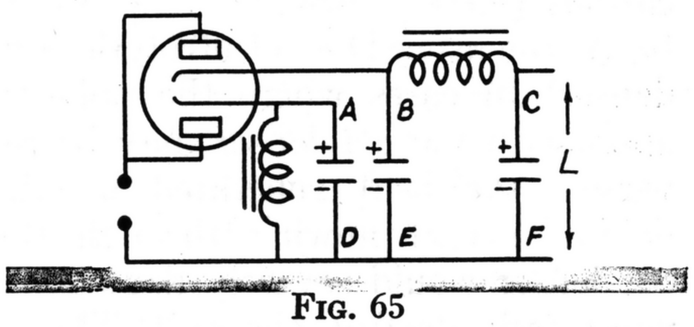

FIG. 65

The circuit in Figure 65 uses a rectifier tube which has two separate and distinct half-wave rectifiers within its envelope, such as the Type 25Z5 tube. We have a half wave rectifier and filter system to supply current to the load, and another half-wave rectifier which supplies current to the field coil.

The condenser connected across the field coil is for the purpose of filtering the current flowing through it. Otherwise there would be quite a bit of hum due to the ripple current passing through; whereas, with the condenser in parallel with the field coil, the peak of the ripple is absorbed and the condenser discharges through the field coil during the period of no current flow from the rectifier.

One of the main purposes of the split cathode design is to make the highest possible voltage available for the output tube plate. With a given total capacitor value for both parallel and individual cathodes, a maximum increase of approximately 20% is possible with the separate cathode connection.

Voltage Doubler Circuits

Although the principle and action of the voltage doubling type of rectifier-filter circuit was known for many years, it was not until the introduction of the popular A.C.-D.C. receivers that there was a good commercial reason for using such a circuit.

Section 3 of this book, entitled Half Wave and Voltage Doubler Power Supplies, appearing on pages 48 through 62, gives a complete discussion of all types of voltage doubler systems. For capacitor characteristics and service, for the doubler applications, please refer to Section 3.

Non-Polarized Condensers

There are quite a number of applications where it would be dangerous to use the usual D.C. electrolytic condenser. In cases where the polarity applied to the condenser may be reversed, the heat generated by the heavy current flowing through the condenser would severely damage, if not totally destroy the unit. This is due to the unidirectional property of the dielectric film which retards the current flow in one direction, but offers no resistance in the other.

There is a simple means of providing an electrolytic condenser which may be used in any circuit wherein the polarity may be accidentally, or intentionally reversed. Such a condenser is called a non-polarized type.

A non-polarized condenser is one in which there is no polarity; i.e., either one of the terminals may be connected to the positive side of the potential source.

Such an electrolytic condenser is easily made by either one of two methods. The first method is to build the condenser with two formed plates, or second—to connect two electrolytic condensers together negative to negative, using the remaining positive terminals for connection to the circuit.

The most general use for non-polarized electrolytic condensers is in receivers to be operated from a D.C. line, although they are frequently used in receivers which are to be operated from batteries.

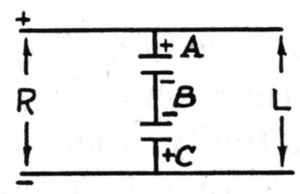

Fig. 66

Fig. 66 clarifies the method which is recommended for the replacement of non-polarized condensers.

Supposing a requirement for a 4 Mfd. non-polarized capacitor, the correct replacement would be a dual 8 Mfd. connected as a common negative unit. To install the replacement connect the positive leads into the circuit and disregard the common negative lead. If replacement unit is of separate section construction, connect the two negative leads together and tape to prevent accidental contact with the circuit. It is obvious that two single sections could be employed instead of the dual unit if their connection into the circuit is made as above.

It should be noted that the capacity resulting from such an arrangement of condensers is equal to one-half the capacity of either section. In addition, both sections of a condenser so used should be of the same capacity.

The working voltage of the capacity resulting from the connections described, and illustrated in Figure 66, is that of one section, and not twice the rating of the one section. Thus—two 450 volt condensers so connected will have a working voltage of 450 volts.

Condenser Action in AC Circuits

The apparent flow of alternating current through a non-conducting material i.e., dielectric of a condenser, is not possible in the strict sense of the word. However, there is a flow of current in an alternating current circuit which includes a condenser.

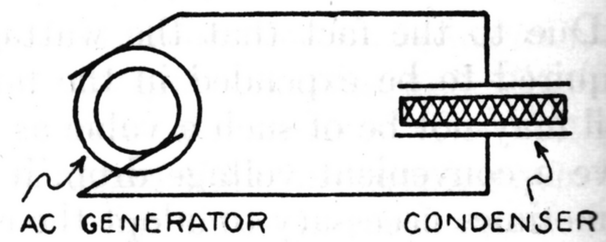

Fig. 67

Fig. 67 shows a condenser connected in a circuit with an alternating current generator. As the generator revolves, and starts a cycle, assume that the upper portion of the circuit is positive, and the lower part of the circuit is negative. The voltage rises from zero to a maximum, and then falls to zero, thus completing one-half of a cycle. At this point, the polarity of the circuit reverses; i.e., the top half of the circuit becomes negative, and the bottom half positive, and again the voltage rises to a peak and falls back to zero, whereupon the polarity again reverses and becomes the same as at the start. One cycle has been completed.

When the voltage rises on the first half of the cycle, the condenser is charged. After the voltage reaches the peak, it falls to zero (at the same rate at which it rose to the peak). We now have a condition wherein we have a charged condenser, and a conducting circuit from one plate of the condenser to the other through the generator.

A charged condenser will discharge, if there is a conducting path from one terminal of the condenser to the other. Therefore, the condenser will discharge through the circuit. However, before this discharge is complete, the voltage from the generator is rising on the second half of the cycle.

The rising voltage of the second half cycle of the alternator is of such a polarity that it aids the completion of the discharge of the condenser, and then recharges the condenser (but with opposite polarity to that of the first charge). The voltage from the alternator again falls to zero, and of course, the condenser discharges through the circuit.

Because the energy required to charge the condenser during one portion of the cycle is delivered back into the circuit, the transference of the charge represents so-called "wattless" current, since, except for usually negligible circuit losses, no power is consumed.

By-Pass Condenser Circuits

Many circuits in radio receivers or amplifiers carry both alternating and direct current. It is necessary to provide separate paths for the flow of these two different currents, in order to accomplish certain actions. A circuit may carry direct current for plate supply and an A.C. signal current at the same time. It is necessary to provide a path for the signal voltages so that they may be applied only to certain portions of the circuit. In other words, it is necessary to separate the direct current and the alternating signal current.

A convenient means of obtaining this separation is to use a condenser to provide a path for the alternating current. Since the direct current does not flow through a condenser, we can obtain the desired separation.

This action is perhaps best illustrated by Fig. 68.

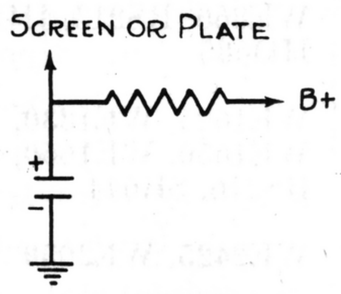

FIG. 68

This circuit shows the use of a condenser to allow the passage of alternating signal current, from the screen circuit of a tube to ground, the resistor prohibiting the alternating current from getting into the "B" supply where it might cause trouble. In most instances the resistor is necessary to provide the correct voltage for the screen, therefore it readily serves two purposes.

An additional illustration of the use of a condenser to provide a path for alternating current, is shown in Fig. 69.

In Fig. 69 the resistor shown connected from the cathode of the tube to ground, is for the purpose of supply-

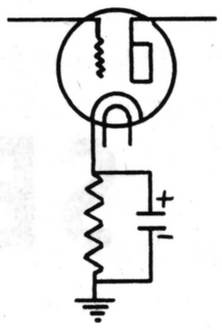

FIG. 69

ing a bias voltage for the grid of the tube. This resistor is usually of several thousand ohms resistance, and would offer an impedance of this value to the flow of the signal current. Such an impedance to signal currents at this point would introduce regeneration, and this is usually to be avoided. If a condenser is connected across the resistor, it will provide a path for the alternating current, which will not affect the required voltage drop across the resistor necessary for bias supply.

Capacity of By-Pass Condensers

The capacity of a by-pass condenser is regulated by the frequency of the current to be handled, and in addition, the resistance of the circuit to be by-passed. It is a general rule, that the capacitive reactance of a condenser should be approximately one-tenth, or less, the resistance value of the circuit to be by-passed.

Capacitive reactance is the impedance; or, opposition of a condenser to the flow of an alternating current. This reactance is expressed in ohms by the formula $X = \frac{1}{w F C}$, where w is 6.28, F is the frequency in cycles per second, and C is the capacity in Farads.

The above formula shows that for a given value of capacity, the reactance decreases with increasing frequency. For practical illustration, let us say that a 1 mfd. condenser has a reactance of 1592 ohms at 100 cycles, but that for 200 cycles, the reactance is only 796 ohms.

To find the correct capacity value to be used for by-pass condensers, it is only necessary to know the resistance of the circuit to be by-passed, and the lowest frequency which will appear in the circuit. Then find the capacity value, the reactance of which is approximately one-tenth or less of the resistance of the circuit to be by-passed, at the lowest frequency which appears in the circuit.

Electrolytic By-Pass Condensers

Inasmuch as many circuits to be by-passed are of very low resistance, or are carrying a low frequency current, it requires a large capacity to effect the proper by-passing action.

Previous to the introduction of the electrolytic condenser, large values of capacity were extremely expensive. However, in electrolytic condensers particularly at low voltages, it is possible to obtain a very large value of capacity at low cost, and in a small space. For instance, the usual capacity required for by-pass in the circuit of Fig. 69, is in the order of 25 mfds. at a potential of approximately 25 volts or less.

An electrolytic condenser suitable for use in this circuit will occupy a space of approximately 11/16" diameter x 1 7/8" long. Such a capacity value in a paper condenser would occupy quite a few cubic inches of space.

Wherever a large capacity is required for a by-pass condenser, and where there is a D.C. voltage, it is advisable to use an electrolytic condenser. For very high frequencies, a paper condenser should be used, inasmuch as electrolytic condensers are not suitable for use as by-pass condensers at frequencies above several kilocycles.

Where a circuit to be by-passed carries both audio and R.F. currents it is often advisable to use both an electrolytic condenser and a paper condenser. Such arrangements are found in many receivers.

WARTIME SERVICING D. C. ELECTROLYTIC CAPACITORS

● This part of the capacitor section is of particular interest to the servicemen responsible for keeping all kinds of electronic equipment in efficient working condition.

The wartime demands on various raw materials and manufacturing processes are making it increasingly difficult for radio parts manufacturers to procure and fabricate these materials for radio replacement parts. Parts manufacturers are finding it necessary to standardize, or universalize, their products so as to obtain a maximum replacement coverage with a minimum usage of critical materials. The Mallory Replacement Condenser Line was originally established as a universal replacement system and has continued in this pattern up to the present time. However, because of the scarcity of certain strategic materials, it was thought that further simplification would be in the interests of conservation. This program was instituted prior to the advent of this country as an active belligerent in the war. It resulted in a number of changes in the replacement system thought advisable at that time, but actually a necessity under existing conditions as this book goes to press.

The simplification program can be considered as occurring in the following steps.

1. The recommending of temporary or in some cases permanent substitutes for wet electrolytic units, the first to suffer under restricted materials.

2. The development of replacement units employing mounting features similar to that of the wet or threaded neck-can type dry units, but using a minimum of scarce metals.

3. A greater conservation of copper through the decrease of capacitor lead lengths.

4. The issuance of suitable cross reference material to provide a means of rapid substitution for types either temporarily or permanently unavailable.

As a fifth and final step we are including cross reference tables and circuit connection charts for a possible replacement of all types of units in the Mallory line as of this writing, by what might be termed a "Minimum Line." This line is predicated upon the use of only ten basic capacitors of the tubular construction as exemplified by the Mallory BB type.

First Step

Under the first step, a listing of unavailable wet and dry capacitors using aluminum cans was provided, together with the catalog number of the recommended substitute. This data appears in Fig. 70. The FP type capacitor, previously discussed, was specified for replacement since it made possible a workmanlike job with a minimum of change, employing capacitors already widely available. Five type FP capacitors provided a complete coverage for 18 wet and 6 aluminum can dry capacitors.

Unavailable Dry Type. Catalog Number	Substitute Catalog Number	Unavailable Wet Type. Catalog Number	Substitute Catalog Number
RS213	FPS142	WE825	FPS142
RS215	FPS143	WE1625	FPS143
RS216	FPS143	WE2425	FPS144
RN232	2S567	WE1830	FPS143
RM262	2S567	WE4030	FPS146
RM265	CM175	WE1835	FPS143
HD684	FPS142	WE3035	FPS145
HD685	FPS142	WE450	FPS142
HD686	2S567	WE850	FPS142
HD683	HD682	WE851	FPS142
HS693	HS692	WE1250	FPS142
SR605	2S567	WE1650	FPS143
SR644	FPS143	WE2050	FPS144
		WE3050	FPS145
		WE4050	FPS146
		WE460	FPS142
		WE860	FPS142
		WE1660	FPS143

FIG. 70

CROSS REFERENCE

Substitute Catalog No.	Replaces Unavailable Catalog Number
FPS142	WE825, WE450, WE850, WE851, WE1250, WE460, WE860, RS213, HD684, HD685
FPS143	WE1625, WE1830, WE1835, WE1650, WE1660, RS215, RS216, SR644
FPS144	WE2425, WE2050
FPS145	WE3035, WE3050
FPS146	WE4030, WE4050
2S567	RN232, RM262, HD686, SR605
CM175	RM265
HD682	HD683
HS692	HS693

FIG. 71

Replacing Wet Electrolytic Condensers

In replacing a wet electrolytic capacitor with a dry type unit, the following instructions should be considered.

From an electrical characteristic angle, dry capacitors can be readily

substituted for all wets except for a very small minority of applications. The only limitation is that the surge voltage should not exceed 525 volts.

In those instances where a high surge voltage is suspected, check the surge voltage by temporarily connecting a 1 mfd. 600 Volt Paper Capacitor in place of the wet and measuring the surge voltage across this capacitor. Use a high resistance voltmeter and take the first steady reading (not maximum swing of the needle). As the set "warms up" the needle will drop back from the surge voltage to the operating voltage. Do not forget that if the set is used on a higher line voltage, the surge and operating voltages will be higher by the voltage ratio of the power transformer.

If the surge is less than 525 volts, equal or better service will be obtained with the recommended unit.

Should the surge voltage exceed 525 volts, proceed as follows: Connect a 5 to 10 ma. bleeder resistor (Mallory 1HJ or 1AV) across the output of the filter circuit, and measure the surge again. If less than 525 volts, connect the bleeder resistor permanently in the circuit and replace the wet with the recommended unit.

If the bleeder resistor does not lower the surge voltage sufficiently, the current bleed can be increased to the desired point so long as the current rating of the rectifier tube or power transformer are not exceeded; or the performance of the receiver affected.

Another alternative, should the surge voltage exceed 525 volts, is to connect two dry capacitors in series, each capacitor to have twice the capacity as the one recommended. (When two capacitors having the same rating are connected in series, the resultant capacity is one-half that of either capacitor.) One unit can be mounted above the chassis in place of the wet, and another can be connected in series under the chassis, using a horizontal mounting clip. Or if you prefer, you may use type BB capacitors having the same rating, under the chassis.

A third alternative, if the surge voltage exceeds 525 volts and a capacity of 8 mfd. is sufficient, is to use one Mallory high surge capacitor, type HS692, which will withstand up to 700 volts surge. If a higher capacity is required, two such capacitors may be connected in parallel, resulting in a total of 16 mfd.

The following three mounting procedures are included for convenience in replacing wet type units with FP type capacitors.

1. If negative of wet capacitor is grounded and has ¾″ diameter screw neck:

It is unnecessary to use the FP bakelite mounting plate since the negative terminals of the FP capacitor will pass freely through the mounting hole in the chassis. Bend the negative terminals straight back (do not twist) and solder these terminals to the chassis. Connect wire or wires to positive terminal in normal manner. In the case of the FPS142, the bakelite mounting plate must be used and mounted in accordance with No. 3 below.

2. If negative of wet capacitor is grounded but has only a ⅝″ diameter screw neck:

If the hole in the chassis does not permit the passage of the FP negative terminals, file small notches around the periphery of the hole and proceed as described in No. 1.

3. If negative of wet capacitor is not grounded:

Place the FP bakelite mounting plate, included with each FP capacitor, over the chassis hole, mark the location of the two mounting holes, and drill. Mount the plate on the capacitor and twist the negative terminals with pliers. Should the negative terminals touch the chassis, notch out the hole as previously described. Fig. 71 gives a cross reference of the recommended substitutes.

Second Step

The second step was the development of replacements providing mounting features closely duplicating those of units discontinued because of the shortage of critical materials used in their construction.

The eventual discontinuance of such capacitors was realized by Mallory over a year ago and because of their policy to continue to supply proven standardized replacement parts wherever possible, Mallory engineers started working for an adequate substitute. Critical materials pre-empted by wartime production were passed by and the less critical materials were thoroughly explored. Knowing that properly seasoned and impregnated hardwood had been proven practical throughout the years in the construction of carpenters' tools, such as screw-threaded clamps, Mallory tested various treated woods for strength and ability to withstand splitting and cracking. Out of this investigation and research, the recently announced Mallory Wooden Neck Capacitor was developed.

Here is a case proving that necessity is the mother of invention. What

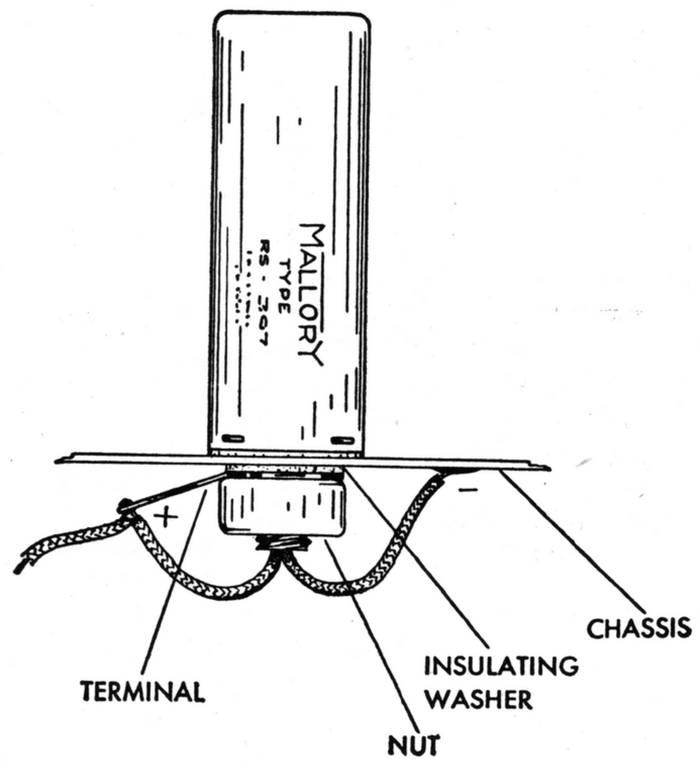

FIG. 72

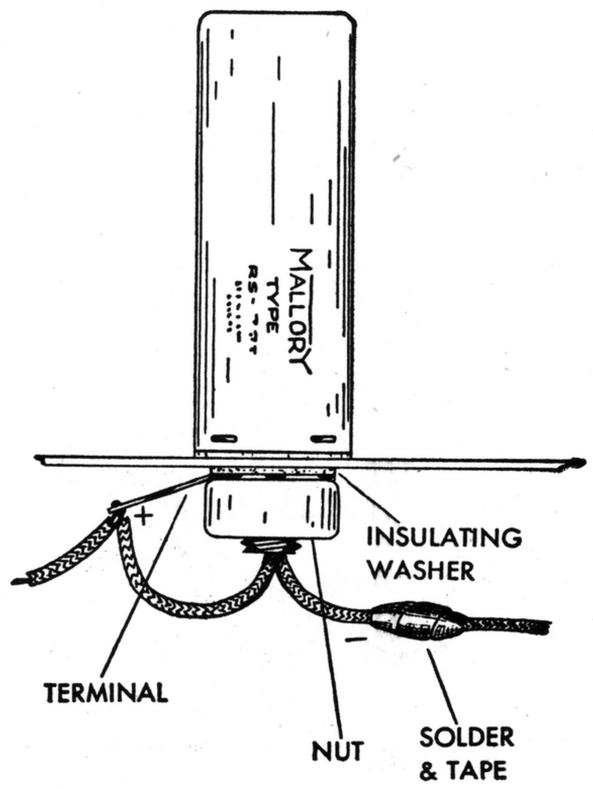

FIG. 73

could be more practical, during these critical times, than a container made of cardboard with a wooden screw neck and nut? A wooden nut is used which grips very securely even when tightened by hand. In addition it is a self insulator—simply mount it in the same manner as the original aluminum screw can and connect the leads to the desired points in the circuit. If metal lugs are preferred, they can be slipped over the self-insulating wooden neck, as shown in Figures 72 through 75.

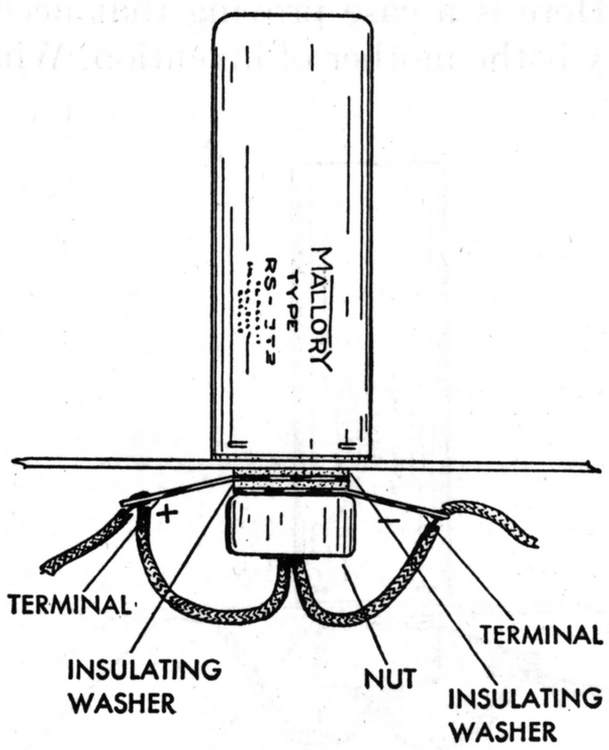

FIG. 74

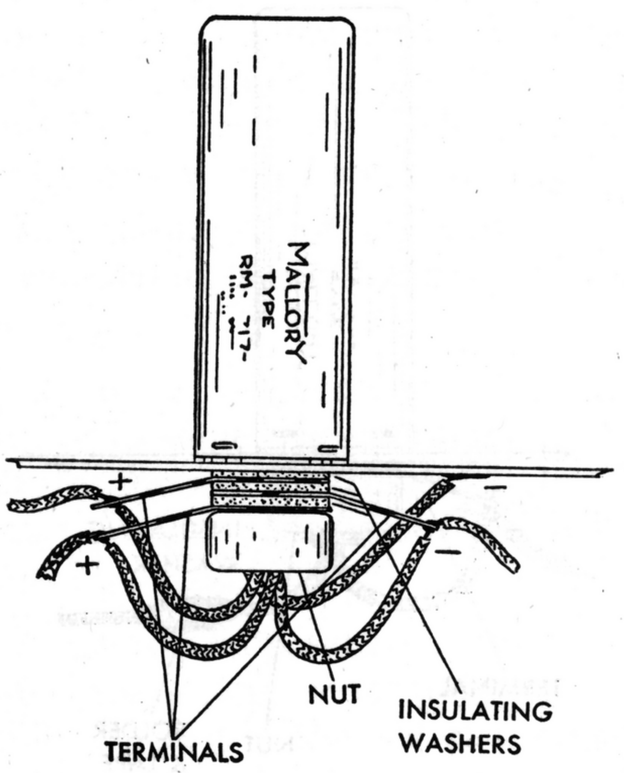

FIG. 75

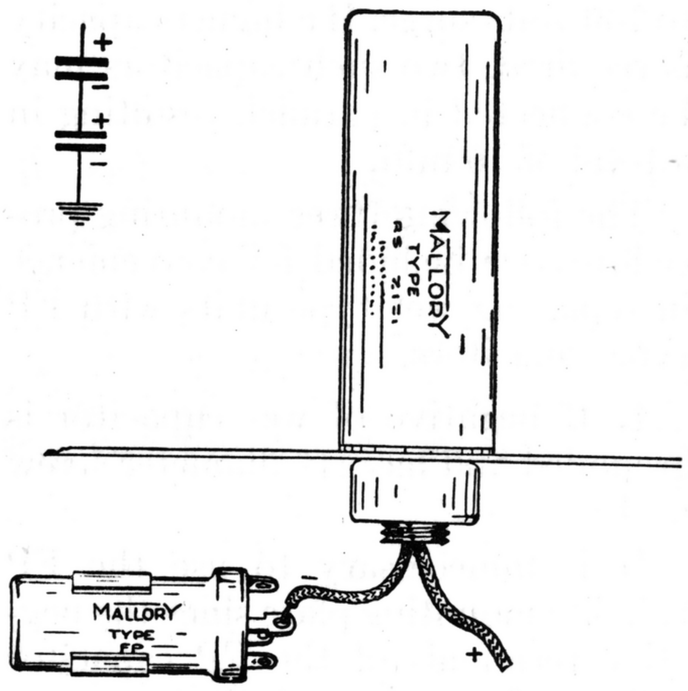

FIG. 76

Discontinued Aluminum Can Wet Type Cat. No.	New Wooden Screw Neck Dry Type Cat. No.
WE825	RS213
WE1625	RS215
WE2425	RS207
WE1830	RS217
WE4030	RS223
WE1835	RS217
WE3035	RS219
WE450	RS213
WE850	RS213
WE851	RS212
WE1250	RS212
WE1650	RS214
WE2050	RS217
WE3050	RS219
WE4050	RS223
WE460	HS691
WE860	HS693
WE1660	*

*Use series connection.

Because dry capacitors have lower power factor, etc., than wets, less dry capacity is required for a replacement. See table below.

Original Wet Capacity	Dry Capacity
4-12 Mfd.	8 Mfd.
8-16 Mfd.	12 Mfd.
12-20 Mfd.	16 Mfd.
16-30 Mfd.	20 Mfd.
20-40 Mfd.	30 Mfd.

FIG. 77

Immediately following are instructions for correct use of the wooden neck replacements.

The Mallory Wooden Screw Neck Capacitor replaces original metal can screw neck capacitors, both dry and wet type. An insulating washer and solder lug terminal are packed with each capacitor for convenience in replacing original capacitors equipped with lugs.

1. To replace a grounded can capacitor. Fig. 72 illustrates the correct use of the washer and lug. Note that the washer insulated the lug from the chassis, and the negative lead (black or dark color) is soldered to the chassis.

2. To replace an insulated can capacitor. Fig. 73 illustrates the use of the washer and lug in the positive lead with the negative lead spliced to original negative lead. Fig. 74 illustrates the use of two sets of the washer and lug. These extra washer and lug sets, catalog WE-S, may be obtained separately.

3. To replace a lug type multisection capacitor. Fig. 75 illustrates the use of three sets of the washer and lug, with one negative grounded.

4. In applications requiring series connection of replacement units, the method shown in Fig. 76 is recommended. Such practice is sometimes necessary in replacing wet type units of 600 volt rating, or in applications where a high surge condition is present. The method of Fig. 76 utilizes the space occupied by the original unit, with the small additional space required by an FP, BB or ST type mounted below the chassis. It should be noted that the same considerations applying to the replacement of wet electrolytics previously outlined under the first steps (substitution with FP types) apply equally to substitution with the wooden neck units. Fig. 77 provides a listing of the discontinued types with their correct replacement in the new construction.

NOTE—The catalog numbers of the original aluminum can type units (RS types) were carried through into the wooden neck construction to keep confusion occurring in substitution, at a minimum.

Third Step

The cutting down of a capacitor lead length under step 3 does not work any great hardship. In most cases the lead length is still great enough, and in applications where it isn't, some of the original lead wires may be easily salvaged.

Fourth Step

The preparation and issuance of substitution cross reference material, outlined under step 4, was quite an assignment. To be really effective, this information must cover every D.C. electrolytic type in the line (as of December, 1941), and must also be provided in two systems, one by capacity rating, and the other by D.C. voltage rating.

The two cross references appear on pages 290 through 301. An examination of both cross references discloses the same general layout. In the center of the capacity reference pages, is the capacity rating column with working volts D.C. to the right and left. Similarly, in the center of the working volts D.C. reference pages, is the working volts column, with capacity to the right and left. Listed on the right side of the page are the various horizontal types, with the vertical mounting types on the left. The columns under the vertical and horizontal mounting headings indicate the internal connections, and the catalog number of each capacitor is printed under the proper column heading. The capacity or D.C. working volts, depending on the cross reference used, is printed in the adjacent column only when that type of mounting is available for the listed rating.

As an example, let us assume that an FP type unit having a rating of 10-10-10 mfd. @ 300 volts, such as Mallory type FPT368, is required but is temporarily out of stock. Locate the recommended capacitor in the cross reference. Keeping in mind that a higher capacity and/or voltage can be substituted with satisfactory results in almost every instance, we look further down the page and find that the best substitute is the type FPT390 unit, rated at 15-15-10 mfd. @ 450 volts. This rating is equal or higher for each section. Also note that the FPT374 having a rating of 20-15-10 mfd. @ 450-300-300 volts would make a satisfactory substitute.

Now refer to the D.C. working volts cross reference and assume that a spade lug capacitor, rated 16-12 mfd. @ 200 volts, such as Mallory type UR194 is required, but is temporarily out of stock. After locating this unit in the cross reference, look further down the page, and notice that the type 2S562 cardboard tubular with universal mounting and rated 16-16 mfd. @ 250 volts, makes an ideal substitute.

It is not always necessary to select a substitute unit from the same column. Sometimes the serviceman knows that he can mount the condenser under the chassis even though the original mounted in another position. If this were the case in the example just given, the Mallory rectangular carton type CM164, with universal mounting feet, rated 16-16 mfd. @ 250 volts, would make an excellent substitute. This unit appears under the horizontal mounting classification.

A further possibility in using the cross reference is the use of paralleled sections of dual and triples to replace units of fewer sections, but higher capacity ratings.

Cross Reference MALLORY DC Electrolytic Condensers

P. R. MALLORY & CO. Inc.

BY CAPACITY

VERTICAL MOUNTING							HORIZONTAL MOUNTING					
CATALOG NUMBER							CATALOG NUMBER					
Special Connections (See 3rd MYE)	Separate Sections (Filters)	1st Section Separate Other Sections Common Negative	Common Negative Filter and By-pass	Common Negative (Filter)	Working Volts DC	CAPACITY MFD.	Working Volts DC	Common Negative (Filter)	Common Negative Filter and By-pass	Common Positive (Filter)	Separate Sections (Filter)	Special Connections (See 3rd MYE)
						SINGLES						
						2	450	CS130				
				WE450(a)	450	4	150 350 450 450 600	BB20 BB40 BB60 CS131 HS690				
				HS691 WE460(c)	600 600							
						5	50	BB11				
				RS203 ST585 WE825(b) ST590 ST595 RS212 RS213 HD684 HD685 WE850(a) WE851(a) HD683	250 250 250 350 450 450 450 450 450 450 450 500	8	150 250 350 450 450 450 500 500 600	BB21 BB31 BB41 BB61 CS133 18450 ST605 HD682 HS692				
				HS693 WE860(c)	600 600							
				FPS142 SR643	450 450	10	25 50 450	BB12 BB13 BB62				
				SR635 RS205 ST591 ST596 RS214 RS215 SR644 WE1250(a)	150 250 350 450 450 450 450 450	12	150 250 350 450	BB22 BB33 BB42 BB63				
				FPS127 FPS143	300 450	15						
				ST587 WE1625(b) ST592 ST597 RS216 RS217 WE1650(a)	250 250 350 450 450 450 450	16	150 250 350 450 450 500	BB24 BB34 BB44 BB64 CS136 ST609				
				WE1660(c)	600							
				WE1830(b) WE1835(b)	300 350	18						
				FPS120 FPS144 FPS144A RS219 WE2050(a)	250 450 450 450 450	20	450	ST598				

				ST589 WE2425(b) ST593	250 250 350	24	150	BB25				
						25	25 50	BB15 BB14				
				FPS113 RS207 FPS129 FPS129A WE3035(b) FPS145 RS223 WE3050(a)	150 250 300 300 350 450 450 450	30	150	BB26				
				FPS102 FPS122 WE4030(b) FPS146 WE4050(a)	25 250 300 450 450	40	150	BB27				
				RS200 FPS115 RS208 FPS137	25 150 300 350	50	25 50	BB17 BB19				
						65	30	SR608				
				FPS149	450	80						
				FPS105	25	100	25 50	HC2501 HC5001				
				FPS140	350	125						
						250	25	HC25025				
				HC1205 FPS037 FPS057 HC2505 HC5005	12 15 25 25 50	500	6 12	HC605 HC1205A				
				HC1210 FPS039 FPS059 HC2510 HC5010	12 15 25 25 50	1000	3 6 12	SR646 HC610 HC1210A				
				FPS030 HC1215	10 12	1500						
				HC1220 FPS041 HC2520 RC2520	12 15 25 25	2000	6 12	HC620 HC1220A				
				HC1240	12	4000						
						DUALS						
						4-4	150 450–150 450	2N500 SR627			CM170	
						5-5	35	SR619				
	SR633				250	6-6	350			SR606		
	RM261			RN241	450	8-4	150			2P541		

VERTICAL MOUNTING							HORIZONTAL MOUNTING					
CATALOG NUMBER								CATALOG NUMBEE				
Special Connections (See 3rd MYE)	Separate Sections (Filters)	1st Section Separate Other Sections Common Negative	Common Negative Filter and By-pass	Common Negative (Filter)	Working Volts DC	CAPACITY MFD.	Working Volts DC	Common Negative (Filter)	Common Negative Filter and By-pass	Common Positive (Filter)	Separate Sections (Filter)	Special Connections (See 3rd MYE)
						DUALS						
SR639 SR645	2S560 RM252 2S564 2S567 RM262 HD686			2N516 RN232 2N517 SR605 2N518 MN272 SR638 SR642	250 250 350 350 450 450 450 450	8-8	150 300–250 459	2N502 UR180		2P542	CM172	
				FPD231	450	10-10	25 50	TN111 TN113				
				SR636	150	12-4	150			2P543		
SR634					400	12-8	300	SR601				
	2S565 2S568				350 450	12-12						
				MN273	450	15-5						
				FPD232	450–250	15-10						
				FPD225	350	15-15						
	2S563			2N519	450	16-8	150	2N504		2P544		
	UR194				200	16-12						
	2S562 2S566 2S569				250 350 450	16-16	150 250	2N506		2P546	CM164	
						20-10	150	2N507				
	2S554			FPD208 FPD217 FPD227 FPD234	150 250 350 450	20-20	150	2N509		2P549	UR192	
						30-8	30–300				SR603	
						30-10	150 150	2N512		2P552 SR620		
				FPD233 FPD235	300–450 450	30-20	150			2P553		
	2S556			2N513 FPD211 FPD228	150 150 350–300	30-30						
						40-20	150	2N514				
				FPD202 FPD221 FPD238	25 250 450	40-40						
	2S558			2N515 FPD214	150 150	50-50						

				FPD245	450	**80-10**						
				FPD200	15	**1000-1000**						
						TRIPLES						
						4-4-4	150					UR183
						5-3-6	300–300–12		SR604			
SR602					300–300–25	**6-4-6**	300–300–12		SR607			
						6-4-10	350–300–25					SR629
			SR632		350–350–25	**6-4-16**						
						8-4-10	150–150–25		3N520			
SR616	RM255 RM265	3S582 3S583 3S584		SR615 MN275	250 350 450–450–350 450	**8-8-8**	150 450	TN120			CM175	
SR628					300–300–25	**8-8-10**						
						8-8-12	350–350–25		SR622			
		3S570 3S575 3S579	SR637		250–250–25 350–350–25 450–450–25	**8-8-20**						
SR609					400–400–25	**8-8-25**	350–300–25 400–400–25		SR611 SR610			
				FPT388	450	**10-5-5**						
				FPT368 FPT389	300 450	**10-10-10**						
				FPT332	450–450–25	**10-10-20**						
		3S577 3S581			350–350–25 450–450–25	**12-12-20**						
				FPT370	350	**15-10-5**						
			FPT328 TN136 FPT333		350–350–25 350–350–25 450–450–25	**15-10-20**						
				FPT359 FPT390	250 450	**15-15-10**						
			FPT316		250–250–25	**15-15-40**						
						16-8-4	150	TN122				
						16-8-5	150				UR193	
	RM257				250	**16-8-8**						
						16-8-10	150–150–25					SR630
						16-10-10	150–150–25		3N525			
SR631					150	**16-12-4**						

VERTICAL MOUNTING							HORIZONTAL MOUNTING					
CATALOG NUMBER								CATALOG NUMBER				
Special Connections (See 3rd MYE)	Separate Sections (Filters)	1st Section Separate Other Sections Common Negative	Common Negative Filter and By-pass	Common Negative (Filter)	Working Volts DC	CAPACITY MFD.	Working Volts DC	Common Negative (Filter)	Common Negative Filter and By-pass	Common Positive (Filter)	Separate Sections (Filter)	Special Connections (See 3rd MYE)
						TRIPLES						
	RM259				250	16-16-8						
			SR617		150–150–25	16-16-10						
		3S572 3S578			250–250–25 350–350–25	16-16-20	150–150–25		3N526			
				FPT369	350–350–250	20-10-5						
						20-10-10	150	TN125				
			TN139		400–350–25	20-10-25						
				FPT374	450–300–300	20-15-10						
			FPT338		450–450–25	20-15-40						
				FPT381	350–250–450	20-20-15						
			FPT351 FPT329 FPT339	FPT354 FPT360	25 150 250–150–150 350– 25–25 450–450–25	20-20-20						
			FPT316C		250–250–25	20-20-40						
			FPT340		450–450–25	20-20-100						
			3N528		150–150–25	24-16-20						
						25-10-5	150				UR182	
			3N532 FPT342		150–150–25 450–450–25	30-10-20						
				FPT362	250	30-15-10						
			FPT343		450–350–25	30-15-20						
						30-16-16	200					SR613
				TN127 FPT371	150 350–250–350	30-20-10						
			FPT313		200–200–25	30-20-20						
				FPT361	250–150–150	30-30-15						
			FPT319	FPT383	250–250–25 450–450–350	30-30-20						
				FPT382	150–450–450	40-15-10						
			FPT324		300–300–25	40-15-20						

			3N534 FPT306	TN129 FPT363	150–150–25 150–150–25 150 250	40-20-20						
			FPT304		150–150–25	40-20-200						
			FPT308 FPT327 FPT346		150– 25–25 350–300–25 450–450–25	40-40-20						
				FPT357	150	40-40-40						
			FPT309		150–150–25	50-30-100						
			FPT322	FPT358	150–250–25 150–250–150	50-40-20						
			FPT311		150–150–25	50-50-20						
						QUADS						
				UR181	450	3-2-1-1						
						8-4-4-12	450–300–150–25		SR626			
						8-8-5-5	450–450–50–50					SR625
				MN277	450	8-8-8-8	250 450					UR190 UR191
		4S718	4N701		150–150–25–25 450–450–25–25	8-8-10-10						
SR612					350–350–100–100	8-8-16-16						
						10-4-4-4	150–300–300–25		SR624			
				FPQ434	450	10-10-10-10						
			SR641		450–450–350–25	12-8-8-10						
			FPQ424		450–450–450–25	15-15-10-20						
			SR623		450–450–450–25	16-2-2-25						
			SR621		200–200–50–50	16-8-5-5						
SR640					450–450–25–25	16-8-10-10						
		4S715			150–150–25–25	16-16-10-10						
				MN278	450	18-18-9-9						
						20-10-5-5	150–150–150–25					SR618
			FPQ421		450–350–350–25	20-15-15-20						
			FPQ426		450–450–25–25	20-15-20-20						
				FPQ435	450	20-20-10-10						
			FPQ414	FPQ444	350–350–150–25 450	20-20-20-20						
			4N708		150–150–25–25	30-20-10-10						

VERTICAL MOUNTING							HORIZONTAL MOUNTING					
CATALOG NUMBER								CATALOG NUMBRR				
Special Connections (See 3rd MYE)	Separate Sections (Filters)	1st Section Separate Other Sections Common Negative	Common Negative Filter and By-pass	Common Negative (Filter)	Working Volts DC	CAPACITY MFD.	Working Volts DC	Common Negative (Filter)	Common Negative Filter and By-pass	Common Positive (Filter)	Separate Sections (Filter)	Special Connections (See 3rd MYE)
						QUADS						
			FPQ415		350–300–250–25	30-20-10-20						
			FPQ407		150–150–150–10	30-20-20-200						
				FPQ439	300–300–450–450	30-30-20-20						
			FPQ429		450–450–450–25	40-30-10-20						
			FPQ416		350–300–300–25	40-40-20-20						
			FPQ409		150–150–150–25	40-40-30-20						
			FPQ412		300–250–250–25	40-50-20-20						
			FPQ410		150–150–150–25	50-50-50-20						
						QUINTS						
UR188					200–200–200–25–25	8-8-8-5-5	200–200–200–25–25					UR189
						8-8-8-12-12	450–250–250–25–25					SR614

Cross Reference MALLORY DC Electrolytic Condensers BY WORKING VOLTAGE

VERTICAL MOUNTING							HORIZONTAL MOUNTING					
CATALOG NUMBER								CATALOG NUMBER				
Special Connections (See 3rd MYE)	Separate Sections (Filter)	1st Section Separate Other Sections Common Negative	Common Negative Filter and By-pass	Common Negative (Filter)	Capacity Mfd.	WORKING VOLTS DC	Capacity Mfd.	Common Negative (Filter)	Common Negative Filter and By-pass	Common Positive (Filter)	Separate Sections (Filter)	Special Connections (See 3rd MYE)
						SINGLES						
						3	1000	SR646				
						6	500 1000 2000	HC605 HC610 HC620				
				FPS030	1500	10						
				HC1205 HC1210 HC1215 HC1220 HC1240	500 1000 1500 2000 4000	12	500 1000 2000	HC1205A HC1210A HC1220A				
				FPS037 FPS039 FPS041	500 1000 2000	15						
				FPS102 RS200 FPS105 FPS057 HC2505 FPS059 HC2510 HC2520 HC2530	40 50 100 500 500 1000 1000 2000 2000	25	10 25 50 100 250	BB12 BB15 BB17 HC2501 HC25025				

						30	65	SR608					
				HC5005	500	50	5	BB11					
				HC5010	1000		10	BB13					
							25	BB14					
							50	BB19					
							100	HC5001					
				SR635	12	150	4	BB20					
							8	BB21					
							12	BB22					
							16	BB24					
				FPS113	30		24	BB25					
							30	BB26					
				FPS115	50		40	BB27					
				ST585	8	250	8	BB31					
				RS203	8								
				WE825(b)	8								
				RS205	12		12	BB33					
				ST587	16		16	BB34					
				WE1625(b)	16								
				FPS120	20								
				ST589	24								
				WE2425(b)	24								
				RS207	30								
				FPS122	40								
				FPS127	15	300							
				WE1830(b)	18								
				FPS129	30								
				FPS129A	30								
				WE4030(b)	40								
				RS208	50								
				ST590	8	350	4	BB40					
				ST591	12		8	BB41					
				ST592	16		12	BB42					
				WE1835(b)	18		16	BB44					
				ST593	24								
				WE3035(b)	30								
				FPS137	50								
				FPS140	125								
				WE450(a)	4	450	2	CS130					
							4	BB60					
							4	CS131					
				ST595	8		8	BB61					
				RS212	8								
				RS213	8		8	CS133					
				HD684	8		8	18450					
				HD685	8								
				WE850(a)	8								
				WE851(a)	8								
				FPS142	10		10	BB62					
				SR643	10								
				ST596	12		12	BB63					
				RS214	12								
				RS215	12								
				SR644	12								
				WE1250(a)	12								
				FPS143	15								
				ST597	16		16	BB64					
				RS216	16		16	CS136					
				RS217	16								
				WE1650(a)	16								
				FPS144	20		20	ST598					
				FPS144A	20								
				WE2050(a)	20								
				RS219	20								
				FPS145	30								
				WE3050(a)	30								
				RS223	30								
				FPS146	40								
				WE4050(a)	40								
				FPS149	80								
				HD683	8	500	8	ST605					
							8	HD682					
							16	ST609					

VERTICAL MOUNTING							HORIZONTAL MOUNTING					
CATALOG NUMBER								CATALOG NUMBER				
Special Connections (See 3rd MYE)	Separate Sections (Filter)	1st Section Separate Other Sections Common Negative	Common Negative Filter and By-pass	Common Negative (Filter)	Capacity Mfd.	WORKING VOLTS DC	Capacity Mfd.	Common Negative (Filter)	Common Negative Filter and By-pass	Common Positive (Filter)	Separate Sections (Filter)	Special Connections (See 3rd MYE)
						SINGLES						
				HS691 WE460(c) HS693 WE860(c) WE1660(c)	4 4 8 8 16	600	4 8	HS690 HS692				
						DUALS						
				FPD200	1000–1000	15						
				FPD202	40–40	25	10–10	TN111				
						35	5–5	SR619				
						50	10–10	TN113				
	2S554 2S556 2S558			SR636 FPD208 2N513 FPD211 2N515 FPD214	12–4 20–20 30–30 30–30 50–50 50–50	150	4–4 8–4 8–8 12–4 16–8 16–16 20–10 20–20 30–10 30–10 30–20 40–20	2N500 2N502 2N504 2N506 2N507 2N509 2N512 2N514		2P541 2P542 2P543 2P544 2P546 2P549 2P552 SR620 2P553	UR192	
	UR194				16–12	200						
	SR633 2S560 RM252 2S562			2N516 RN232 FPD217 FPD221	6–6 8–8 8–8 16–16 20–20 40–40	250	16–16				CM164	
						300–30	8–30				SR603	
						300–350	8–8	UR180				
						300	12–8	SR601				
				FPD228	30–30	350–300						
	2S564 2S565 2S566			2N517 SR605 FPD225 FPD227	8–8 8–8 12–12 15–15 16–16 20–20	350	6–6			SR606		
SR634					12–8	400						
						450–150	4–4	SR627				
				FPD232	15–10	450–250						
				FPD233	20–30	450–300						

							4–4				CM170	
SR639 SR645	RM261 2S567 RM262 HD686			RN241 2N518 MN272 SR638 SR642 FPD231	8–4 8–8 8–8 8–8 8–8 10–10		8–8				CM172	
	2S568				12–12	450						
	2S563 2S569			MN273 2N519	15–5 16–8 16–16							
				FPD234 FPD235 FPD238 FPD245	20–20 30–20 40–40 80–10							
						TRIPLES						
			FPT351		20–20–20	25						
			FPT308		40–40–20	150–25–25						
							8–4–10 16–8–10		3N520			SR630
			SR617		16–16–10	150–150–25	16–10–10		3N525			
			3N528 3N532 3N534 FPT306 FPT304 FPT309 FPT311		24–16–20 30–10–20 40–20–20 40–20–20 40–20–200 50–30–100 50–50–20		16–16–20		3N526			
							4–4–4 8–8–8 16–8–4 16–8–5	TN120 TN122				UR183
SR631					16–12–4	150	20–10–10	TN125			UR193	
				FPT354	20–20–20		25–10–5				UR182	
				TN127 TN129 FPT357	30–20–10 40–20–20 40–40–40							
			FPT313		30–20–20	200–200–25						
						200	16–30–16					SR613
			FPT322		40–50–20	250–150–25						
				FPT360 FPT361 FPT358	20–20–20 30–30–15 40–50–20	250–150–150						
		3S570			8– 8–20							
			FPT316		15–15–40							
		3S572			16–16–20	250–250–25						
			FPT316C FPT319		20–20–40 30–30–20							
	RM255	3S582			8–8–8							
				FPT359	15–15–10							
	RM257 RM259				16– 8– 8 16–16– 8	250						
				FPT362 FPT363	30–15–10 40–20–20							
						300–300–12	5–3–6 6–4–6		SR604 SR607			
SR602 SR628					6– 4– 6 8– 8–10	300–300–25						
			FPT324		40–15–20							
				FPT368	10–10–10	300						
			FPT329		20–20–20	350–25–25						

VERTICAL MOUNTING							HORIZONTAL MOUNTING					
CATALOG NUMBER							CATALOG NUMBER					
Special Connections (See 3rd MYE)	Separate Sections (Filter)	1st Section Separate Other Sections Common Negative	Common Negative Filter and By-pass	Common Negative (Filter)	Capacity Mfd.	WORKING VOLTS DC	Capacity Mfd.	Common Negative (Filter)	Common Negative Filter and By-pass	Common Positive (Filter)	Separate Sections (Filter)	Special Connections (See 3rd MYE)
						TRIPLES						
			FPT327		40–40–20	350–300–25	6–4–10 8–8–25		SR611			SR629
		3S575 3S577 3S578	SR632 SR637 TN136 FPT328		6–4–16 8–8–20 12–12–20 15–10–20 15–10–20 16–16–20	350–350–25	8–8–12		SR622			
				FPT369 FPT371	20–10–5 30–10–20	350–350–250						
		3S583		FPT370	8–8–8 15–10–5	350						
			TN139		20–10–25	400–350–25						
SR609					8–8–25	400–400–25	8–8–25		SR610			
				FPT374	20–15–10	450–300–300						
			FPT343		30–15–20	450–350–25						
				FPT381	15–20–20	450–350–250						
		3S579 3S581	FPT332 FPT333 FPT338 FPT339 FPT340 FPT342 FPT346		8–8–20 10–10–20 12–12–20 15–10–20 20–15–40 20–20–20 20–20–100 30–10–20 40–40–20	450–450–25						
				FPT382	15–10–40	450–450–150						
SR616				SR615 FPT383	8–8–8 30–30–20	450–450–350						
	RM265	3S584		MN275 FPT388 FPT389 FPT390	8–8–8 10– 5– 5 10–10–10 15–15–10	450	8–8–8				CM175	
						QUADS						
		4S715	4N701 4N708		8–8–10–10 16–16–10–10 30–20–10–10	150–150–25–25						
			FPQ407		30–20–20–200	150–150–150–10						
			FPQ409 FPQ410		40–40–30–20 50–50–50–20	150–150–150–25	5–20–10–5					SR618
			SR621		16–8–5–5	200–200–50–50						
						250	8–8–8–8					UR190
			FPQ412		40–50–20–20	300–250–250–25						
						300–300–150–25	4–4–10–4		SR624			
			FPQ415		30–20–10–20	350–300–250–25						
			FPQ416		40–40–20–20	350–300–300–25						

| | | |

REPLACEMENT RECOMMENDATIONS—SINGLE SECTION UNITS

PRESENT LINE			MINIMUM LINE			
Capacity	Voltage	Catalog No.	Capacity	Voltage	Catalog No.	No. Req.
1000	3	SR646	These capacitors not used for home radio receiver functions. Not subject to replacement under this program.			
500	6	HC605				
1000	6	HC610				
2000	6	HC620				
1500	10	FPS030				
500	12	HC1205				
500	12	HC1205A				
1000	12	HC1210				
1000	12	HC1210A				
1500	12	HC1215				
2000	12	HC1220				
2000	12	HC1220A				
4000	12	HC1240				
500	15	FPS037				
1000	15	FPS039				
2000	15	FPS041				
10	25	BB12	25	50	BB14	1
25	25	BB15				
40	25	FPS102				
50	25	BB17	25	50	BB14	2
50	25	RS200				
100	25	FPS105	Not subject to replacement under this program.			
100	25	HC2501				
250	25	HC25025				
500	25	FPS057				
500	25	HC2505				
1000	25	FPS059				
1000	25	HC2510				
2000	25	HC2520				
2000	25	RC2520				
65	30	SR608	25	50	BB14	2
5	50	BB11				
10	50	BB13	25	50	BB14	1
25	50	BB14				
50	50	BB19	25	50	BB14	2
100	50	HC5001	Not subject to replacement under this program.			
500	50	HC5005				
1000	50	HC5010				
4	150	BB20				
8	150	BB21	8	150	BB21	1
12	150	BB22				
12	150	SR635	20	150	BB25*	1
16	150	BB24				
			‡See "Replacing Wet Electrolytic Condensers," page 286			
*Revised rating						

PRESENT LINE			MINIMUM LINE			
Capacity	Voltage	Catalog No.	Capacity	Voltage	Catalog No.	No. Req.
24	150	BB25				
30	150	BB26				
30	150	FPS113	40	150	BB27	1
40	150	BB27				
50	150	FPS115				
8	250	BB31				
8	250	ST585	8	250	BB31	1
8	250	RS203				
8	250	WE825				
12	250	BB23				
12	250	RS205				
16	250	BB34				
16	250	ST587	20	250	BB34*	1
16	250	WE1625				
20	250	FPS120				
24	250	ST589				
15	300	FPS127	16	450	BB64	1
18	300	WE1830				
30	300	FPS129				
30	300	FPS129A	30	450	BB68	1
40	300	WE4030				
50	300	RS208	30+20	450	BB68+BB65	1 ea.
4	350	BB40				
8	350	BB41	8	450	BB61	1
8	350	ST590				
12	350	BB42				
12	350	ST591				
16	350	BB44	16	450	BB64	1
16	350	ST592				
18	350	WE1835				
24	350	ST593	20	450	BB65	1
30	350	WE3035				
50	350	FPS137	30+20	450	BB68+BB65	1 ea.
125	350	FPS140	Not subject to replacement			
2	450	CS130				
4	450	BB60				
4	450	CS131				
8	450	BB61				
8	450	ST595				
8	450	CS133	8	450	BB61	1
8	450	18450				
8	450	RS212				
8	450	RS213				
8	450	HD684				

PRESENT LINE			MINIMUM LINE			
Capacity	Voltage	Catalog No.	Capacity	Voltage	Catalog No.	No. Req.
8	450	HD685				
10	450	BB62	8	450	BB61	1
10	450	FPS142				
10	450	SR643				
12	450	BB63				
12	450	ST596				
12	450	RS214				
12	450	RS215				
12	450	SR644				
15	450	FPS143	16	450	BB64	1
16	450	BB64				
16	450	ST597				
16	450	CS136				
16	450	RS216				
16	450	RS217				
20	450	ST598				
20	450	FPS144	20	450	BB65	1
20	450	FPS144A				
20	450	RS219				
30	450	FPS145	30	450	BB68	1
30	450	RS223				
40	450	FPS146	20+20	450	BB65	2
80	450	FPS149	Not subject to replacement			
4	500	WE450				
8	500	WE850				
8	500	WE851	8	450	BB61‡	1
8	500	HD682				
8	500	HD683				
8	500	ST605				
12	500	WE1250	8	450	BB61‡	1
16	500	WE1650				
16	500	ST609	16	450	BB64‡	1
20	500	WE2050				
30	500	WE3050	20	450	BB65‡	1
40	500	WE4050	30	450	BB68‡	1
4	600	WE460				
4	600	HS690	8-8 Use series connection	450	BB61	2
4	600	HS691				
8	600	WE860				
8	600	HS692	16-16 Use series connection	450	BB64	2
8	600	HS693				
16	600	WE1660	30-30 Use series connection	450	BB68	2

REPLACEMENT RECOMMENDATIONS—DUAL UNITS

PRESENT LINE					MINIMUM LINE					
Capacity		Voltage		Cat. No.	Capacity		Voltage		Catalog No.	
Sec. 1	Sec. 2	Section 1	Section 2		Sec. 1	Sec. 2	Section 1	Section 2	Section 1	Section 2
1000	1000	15	15	FPD200	Not subject to replacement					
10	10	25	25	TN111	25	25	50	50	BB14	BB14
40	40	25	25	FPD202	2-25	2-25	50	50	2-BB14	2-BB14
5	5	35	35	SR619	25	25	50	50	BB14	BB14
10	10	50	50	TN113	25	25	50	50	BB14	BB14
4	4	150	150	2N500						
8	4	150	150	2P541						
8	8	150	150	2N502	8	8	150	150	BB21	BB21
8	8	150	150	2P542						
12	4	150	150	2P543						
12	4	150	150	SR636						
16	8	150	150	2N504	20	8	150	150	BB25	BB21
16	8	150	150	2P544						
16	16	150	150	2N506	20	20	150	150	BB25	BB25
16	16	150	150	2P546						
20	10	150	150	2N507	20	8	150	150	BB25	BB21
20	20	150	150	2S554						
20	20	150	150	FPD208						
20	20	150	150	2N509	20	20	150	150	BB25	BB25
20	20	150	150	2P549						
20	20	150	150	UR192						
30	10	150	150	2N512						
30	10	150	150	2P552	20	20	150	150	BB25	BB25
30	10	150	150	SR620						
30	20	150	150	2P553	40	20	150	150	BB27	BB25
30	30	150	150	2S556						
30	30	150	150	2N513	40	20	150	150	BB27	BB25
30	30	150	150	FPD211						
40	20	150	150	2N514						
50	50	150	150	2S558						
50	50	150	150	2N515	40	40	150	150	BB27	BB27
50	50	150	150	FPD214						
16	12	200	200	UR194	20	8	250	250	BB34	BB31
6	6	250	250	SR633	8	8	250	250	BB31	BB31
8	8	250	250	2S560						
8	8	250	250	2N516	8	8	250	250	BB31	BB31
8	8	250	250	RM252						
8	8	250	250	RN232						
16	16	250	250	2S562						
16	16	250	250	CM164	20	20	250	250	BB34	BB34
20	20	250	250	FPD217						

PRESENT LINE					MINIMUM LINE					
Capacity		Voltage		Cat. No.	Capacity		Voltage		Catalog No.	
Sec. 1	Sec. 2	Section 1	Section 2		Sec. 1	Sec. 2	Section 1	Section 2	Section 1	Section 2
40	40	250	250	FPD221	2-20	2-20	250	250	2-BB34	2-BB34
8	30	300	30	SR603	8	25	450	50	BB61	BB14
12	8	300	300	SR601	16	8	450	450	BB64	BB61
8	8	350	300	UR180	8	8	450	450	BB61	BB61
30	30	350	300	FPD228	30	30	450	450	BB68	BB68
6	6	350	350	SR606						
8	8	350	350	2S564	8	8	450	450	BB61	BB61
8	8	350	350	2N517						
8	8	350	350	SR605						
12	12	350	350	2S565	8	16	450	450	BB61	BB64
15	15	350	350	FPD225	16	16	450	450	BB64	BB64
16	16	350	350	2S566						
20	20	350	350	FPD227	20	20	450	450	BB65	BB65
12	8	400	400	SR634	16	8	450	450	BB64	BB61
4	4	450	150	SR627	8	8	450	150	BB61	BB21
15	10	450	250	FPD232	16	8	450	250	BB64	BB31
20	30	450	300	FPD233	20	30	450	450	BB65	BB68
4	4	450	450	CM170						
8	4	450	450	RM261						
8	4	450	450	RN241						
8	8	450	450	SR639						
8	8	450	450	2S567						
8	8	450	450	2N518						
8	8	450	450	CM172	8	8	450	450	BB61	BB61
8	8	450	450	SR645						
8	8	450	450	RM262						
8	8	450	450	MN272						
8	8	450	450	HD686						
8	8	450	450	SR638						
8	8	450	450	SR642						
10	10	450	450	FPD231						
12	12	450	450	2S568						
15	5	450	450	MN273	16	8	450	450	BB64	BB61
16	8	450	450	2S563						
16	8	450	450	2N519						
16	16	450	450	2S569	16	16	450	450	BB64	BB64
20	20	450	450	FPD234	20	20	450	450	BB65	BB65
30	20	450	450	FPD235	30	20	450	450	BB68	BB65
40	40	450	450	FPD238	2-20	2-20	450	450	2-BB65	2-BB65
80	10	450	450	FPD245	Not subject to replacement under this program					

REPLACEMENT RECOMMENDATIONS—TRIPLE UNITS

PRESENT LINE							MINIMUM LINE								
Capacity			Voltage			Catalog No.	Capacity			Voltage			Catalog No.		
Section 1	Section 2	Section 3	Section 1	Section 2	Section 3		Section 1	Section 2	Section 3	Section 1	Section 2	Section 3	Section 1	Section 2	Section 3
20	20	20	25	25	25	FPT351	25	25	25	50	50	50	BB14	BB14	BB14
40	40	20	150	25	25	FPT308	40	25	25	150	50	50	BB27	BB14	BB14
8	4	10	150	150	25	3N520	8	8	25	150	150	50	BB21	BB21	BB14
16	8	10	150	150	25	SR630	20	8	25	150	150	50	BB25	BB21	BB14
16	10	10	150	150	25	3N525									
16	16	10	150	150	25	SR617									
16	16	20	150	150	25	3N526	20	20	25	150	150	50	BB25	BB25	BB14
24	16	20	150	150	25	3N528									
30	10	20	150	150	25	3N532									
40	20	20	150	150	25	3N534	40	20	25	150	150	50	BB27	BB25	BB14
40	20	20	150	150	25	FPT306									
†40	20	200	150	150	25	FPT304	40	20		150	150		BB27	BB25	
†50	30	100	150	150	25	FPT309	40	40		150	150		BB27	BB27	
50	50	20	150	150	25	FPT311	40	40	25	150	150	50	BB27	BB27	BB14
4	4	4	150	150	150	UR183	8	8	8	150	150	150	BB21	BB21	BB21
8	8	8	150	150	150	TN120									
16	8	4	150	150	150	TN124									
16	8	5	150	150	150	UR193	20	8	8	150	150	150	BB25	BB21	BB21
16	12	4	150	150	150	SR631									
20	10	10	150	150	150	TN125									
20	20	20	150	150	150	FPT354	20	20	20	150	150	150	BB25	BB25	BB25
25	10	5	150	150	150	UR182	20	20	8	150	150	150	BB25	BB25	BB21
30	20	10	150	150	150	TN127	40	20	8	150	150	150	BB27	BB25	BB21
40	20	20	150	150	150	TN129	40	20	20	150	150	150	BB27	BB25	BB25
40	40	40	150	150	150	FPT357	40	40	40	150	150	150	BB27	BB27	BB27
30	20	20	200	200	25	FPT313	20+8	20	25	250	250	50	BB34+BB31	BB34	BB14
16	30	16	200	200	200	SR613	20	20	20	250	250	250	BB34	BB34	BB34
40	50	20	250	150	25	FPT322	2-20	40	25	250	150	25	2-BB34	BB27	BB14
20	20	20	250	150	150	FPT360	20	20	20	250	150	150	BB34	BB25	BB25
30	30	15	250	150	150	FPT361	20+8	40	20	250	150	150	BB34+BB31	BB27	BB25
40	50	20	250	150	150	FPT358	2-20	40	20	250	150	150	2-BB34	BB27	BB25
8	8	20	250	250	25	3S570	8	8	25	250	250	50	BB31	BB31	BB14
15	15	40	250	250	25	FPT316									
16	16	20	250	250	25	3S572	20	20	25	250	250	50	BB34	BB34	BB14
20	20	40	250	250	25	FPT316C									
30	30	20	250	250	25	FPT319	20+8	20+8	25	250	250	50	BB34+BB31	BB31+BB34	BB14
8	8	8	250	250	250	RM255	8	8	8	250	250	250	BB31	BB31	BB31
8	8	8	250	250	250	3S582									
16	8	8	250	250	250	RM257	20	8	8	250	250	250	BB34	BB31	BB31
15	15	10	250	250	250	FPT359	20	20	8	250	250	250	BB34	BB34	BB31
16	16	8	250	250	250	RM259									
30	15	10	250	250	250	FPT362	20+8	20	8	250	250	250	BB31+BB34	BB34	BB31
40	20	20	250	250	250	FPT363	2-20	20	20	250	250	250	2-BB34	BB34	BB34
5	3	6	300	300	12	SR604									
6	4	6	300	300	12	SR607	8	8	25	450	450	50	BB61	BB61	BB14
6	4	6	300	300	25	SR602									
8	8	10	300	300	25	SR628									
40	15	20	300	300	25	FPT324	2-20	16	25	450	450	50	2-BB65	BB64	BB14
10	10	10	300	300	300	FPT368	16	8	8	450	450	450	BB64	BB61	BB61
20	20	20	350	25	25	FPT329	20	25	25	450	50	50	BB65	BB14	BB14
6	4	10	350	300	25	SR629									
8	8	25	350	300	25	SR611									
6	4	16	350	350	25	SR632	8	8	25	450	450	50	BB61	BB61	BB14
8	8	12	350	350	25	SR622									
8	8	20	350	350	25	SR637									
8	8	20	350	350	25	3S575									
12	12	20	350	350	25	3S577									
15	10	20	350	350	25	TN136	16	8	25	450	450	50	BB64	BB61	BB14
15	10	20	350	350	25	FPT328									
16	16	20	350	350	25	3S578	16	16	25	450	450	50	BB64	BB64	BB64
20	10	5	350	350	250	FPT369	20	8	8	450	450	250	BB65	BB61	BB31
30	10	20	350	350	250	FPT371	30	8	20	450	450	250	BB68	BB61	BB34
8	8	8	350	350	350	3S583	8	8	8	450	450	450	BB61	BB61	BB61
15	10	5	350	350	350	FPT370	16	8	8	450	450	450	BB64	BB61	BB61
20	10	25	400	350	25	TN135	20	8	25	450	450	50	BB65	BB61	BB14
8	8	25	400	400	25	SR609	8	8	25	450	450	50	BB61	BB61	BB14
8	8	25	400	400	25	SR610									
20	15	10	450	300	300	FPT374	20	16	8	450	450	450	BB65	BB64	BB61
30	15	20	450	350	25	FPT343	30	16	25	450	450	50	BB68	BB64	BB14
8	8	20	450	450	25	3S579	8	8	25	450	450	50	BB61	BB61	BB14
10	10	20	450	450	25	FPT332									
12	12	20	450	450	25	3S581	16	8	25	450	450	50	BB64	BB61	BB14
15	10	20	450	450	25	FPT333									
20	15	40	450	450	25	FPT338	20	16	25	450	450	50	BB65	BB64	BB14
20	20	20	450	450	25	FPT339	20	20	25	450	450	50	BB65	BB65	BB14
†20	20	100	450	450	25	FPT340	20	20		450	450		BB65	BB65	
30	10	20	450	450	25	FPT342	20	20	25	450	450	50	BB65	BB65	BB14
40	40	20	450	450	25	FPT346	2-20	2-20	25	450	450	50	2-BB65	2-BB65	BB14
15	10	40	450	450	150	FPT382	16	8	40	450	450	150	BB64	BB61	BB27
8	8	8	450	450	350	SR615	8	8	8	450	450	450	BB61	BB61	BB61
8	8	8	450	450	350	SR616									
30	30	20	450	450	350	FPT383	30	30	20	450	450	450	BB68	BB68	BB65
8	8	8	450	450	450	MN275									
8	8	8	450	450	450	3S584	8	8	8	450	450	450	BB61	BB61	BB61
8	8	8	450	450	450	RM265									
10	5	5	450	450	450	FPT388									
10	10	10	450	450	450	FPT389	16	8	8	450	450	450	BB64	BB61	BB61
15	10	10	450	450	450	FPT390									

†Filter Sections Only

REPLACEMENT RECOMMENDATIONS—QUAD UNITS

PRESENT LINE									MINIMUM LINE											
Capacity				Voltage				Cat. No.	Capacity				Voltage				Catalog No.			
Sec. 1	Sec. 2	Sec. 3	Sec. 4	Section 1	Section 2	Section 3	Section 4		Sec. 1	Sec. 2	Sec. 3	Sec. 4	Section 1	Section 2	Section 3	Section 4	Section 1	Section 2	Section 3	Section 4
8	8	10	10	150	150	25	25	4N701	8	8	25	25	150	150	50	50	BB21	BB21	BB14	BB14
16	16	10	10	150	150	25	25	4S715	20	20	25	25	150	150	50	50	BB25	BB25	BB14	BB14
30	20	10	10	150	150	25	25	4N708	40	20	25	25	150	150	50	50	BB27	BB25	BB14	BB14
†30	20	20	200	150	150	150	10	FPQ407	40	20	20		150	150	150		BB27	BB25	BB25	
5	20	10	5	150	150	150	25	SR618	8	20	8	25	150	150	150	50	BB21	BB25	BB21	BB14
40	40	30	20	150	150	150	25	FPQ409	40	40	40	25	150	150	150	50	BB27	BB27	BB27	BB14
50	50	50	20	150	150	150	25	FPQ410												
16	8	5	5	200	200	25	25	SR621	20	8	25	25	250	250	50	50	BB34	BB31	BB14	BB14
8	8	8	8	250	250	250	250	UR190	8	8	8	8	250	250	250	250	BB31	BB31	BB31	BB31
									8 +								BB68 +			
40	50	20	20	300	250	250	25	FPQ412	30	2-20	20	25	450	250	250	50	BB61	2-BB34	BB34	BB14
4	4	10	4	300	300	150	25	SR624	8	8	8	25	450	450	150	50	BB61	BB61	BB21	BB14
30	20	10	20	350	300	250	25	FPQ415	30	20	8	25	450	450	250	50	BB68	BB65	BB31	BB14
40	40	20	20	350	300	300	25	FPQ416	2-20	2-20	20	25	450	450	450	50	2-BB65	2-BB65	BB65	BB14
8	8	16	16	350	350	100	100	SR612	8	8	20	20	450	450	150	150	BB61	BB61	BB25	BB25
20	20	20	20	350	350	150	25	FPQ414	20	20	20	25	450	450	150	50	BB65	BB65	BB25	BB14
8	4	4	12	450	300	150	25	SR626	8	8	8	25	450	450	150	50	BB61	BB61	BB21	BB14
20	15	15	20	450	350	350	25	FPQ421	20	16	16	25	450	450	450	50	BB65	BB64	BB64	BB14
8	8	10	10	450	450	25	25	4S718	8	8	25	25	450	450	50	50	BB61	BB61	BB14	BB14
16	8	10	10	450	450	25	25	SR640	16	8	25	25	450	450	50	50	BB64	BB61	BB14	BB14
20	15	20	20	450	450	25	25	FPQ426	20	16	25	25	450	450	50	50	BB65	BB64	BB14	BB14
8	8	5	5	450	450	50	50	SR625	8	8	25	25	450	450	50	50	BB61	BB61	BB14	BB14
20	20	30	30	450	450	300	300	FPQ439	20	20	30	30	450	450	450	450	BB65	BB65	BB68	BB68
12	8	8	10	450	450	350	25	SR641	16	8	8	25	450	450	450	50	BB64	BB61	BB61	BB14
16	2	2	25	450	450	450	25	SR623	16	8	8	25	450	450	450	50	BB64	BB61	BB61	BB14
15	15	10	20	450	450	450	25	FPQ424	16	16	8	25	450	450	450	50	BB64	BB64	BB61	BB14
40	30	10	20	450	450	450	25	FPQ429	2-20	30	8	25	450	450	450	50	2-BB65	BB68	BB61	BB14
3	2	1	1	450	450	450	450	UR181	Discontinued											
8	8	8	8	450	450	450	450	MN277	8	8	8	8	450	450	450	450	BB61	BB61	BB61	BB61
8	8	8	8	450	450	450	450	UR191												
10	10	10	10	450	450	450	450	FPQ434	16	8	8	8	450	450	450	450	BB64	BB61	BB61	BB61
18	18	9	9	450	450	450	450	MN278	20	20	8	8	450	450	450	450	BB65	BB65	BB61	BB61
20	20	10	10	450	450	450	450	FPQ435												
20	20	20	20	450	450	450	450	FPQ444	20	20	20	20	450	450	450	450	BB65	BB65	BB65	BB65

†Filter Sections Only

REPLACEMENT RECOMMENDATIONS—FIVE SECTION UNITS

PRESENT LINE											MINIMUM LINE														
Capacity					Voltage					Cat. No.	Capacity					Voltage					Catalog Number				
Sec. 1	Sec. 2	Sec. 3	Sec. 4	Sec. 5	Sec. 1	Sec. 2	Sec. 3	Sec. 4	Sec. 5		Sec. 1	Sec. 2	Sec. 3	Sec. 4	Sec. 5	Sec. 1	Sec. 2	Sec. 3	Sec. 4	Sec. 5	Section 1	Section 2	Section 3	Section 4	Section 5
8	8	8	5	5	200	200	200	25	25	UR188	8	8	8	25	25	250	250	250	50	50	BB31	BB31	BB31	BB14	BB14
8	8	8	5	5	200	200	200	25	25	UR189															
8	8	8	12	12	450	250	250	25	25	SR614	8	8	8	25	25	450	250	250	50	50	BB61	BB31	BB31	BB14	BB14

DUAL FP UNIT (FPD)
TYPE MN (2 SECTION)

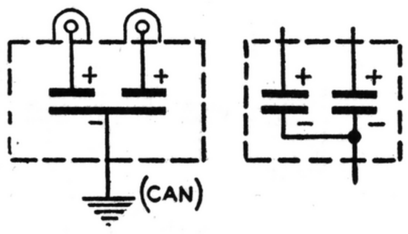

FIG. 78

TRIPLE FP UNIT (FPT)
TYPE MN (3 SECTION)

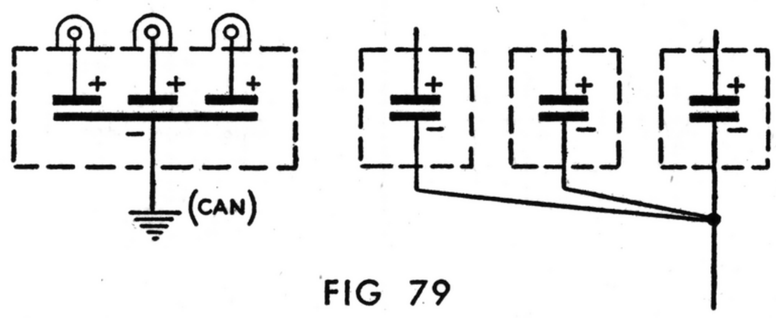

FIG 79

QUADRUPLE FP UNIT (FPQ)
TYPE MN (4 SECTION)

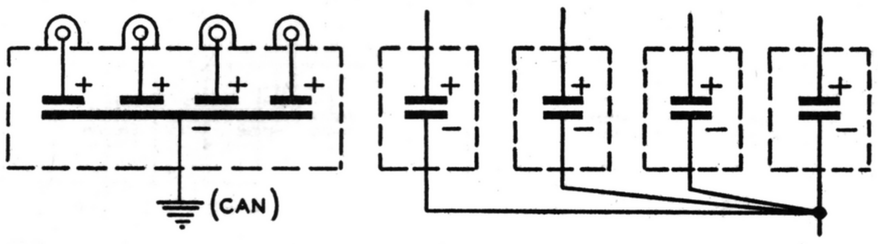

FIG. 80

TYPE RN

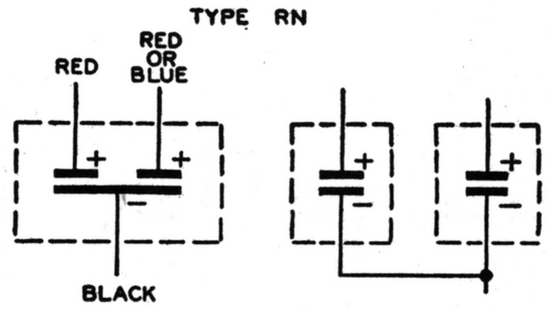

FIG. 81

TYPE CM (2 OR 3 SECTION)

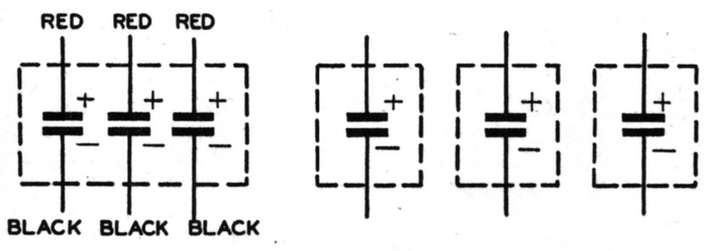

FIG. 82

TYPE RM
(2 SECTION)

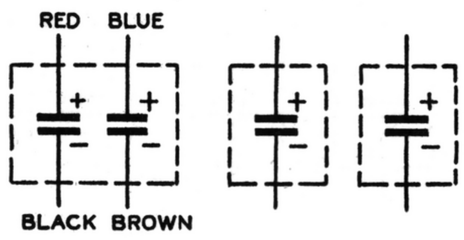

FIG. 83

TYPE RM
(3 SECTION)

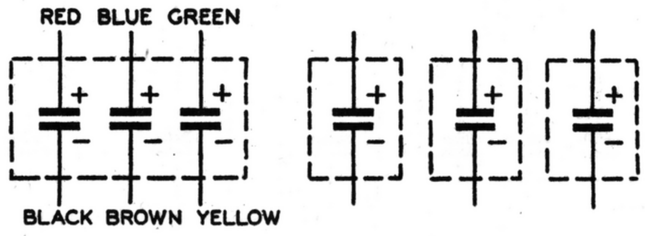

FIG. 84

TYPE 2N OR TN
(2 SECTIONS)

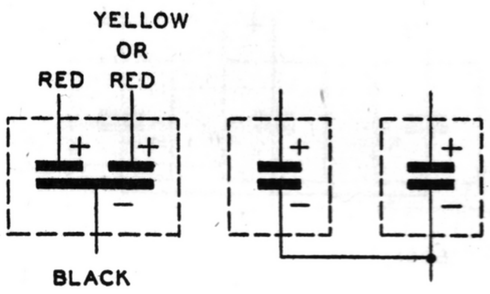

FIG. 85

TYPE 2P

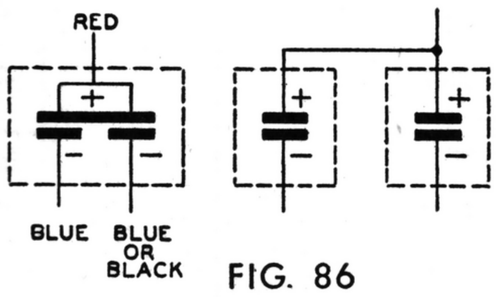

FIG. 86

TYPE 2S

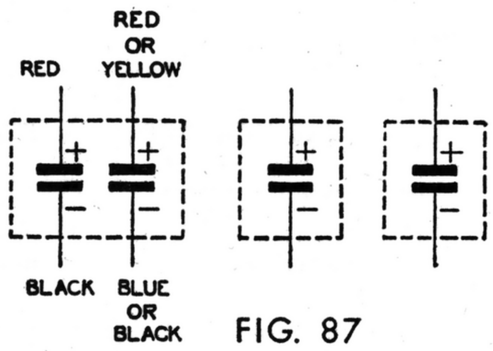

FIG. 87

TYPE 3N OR TN
(3 SECTIONS)

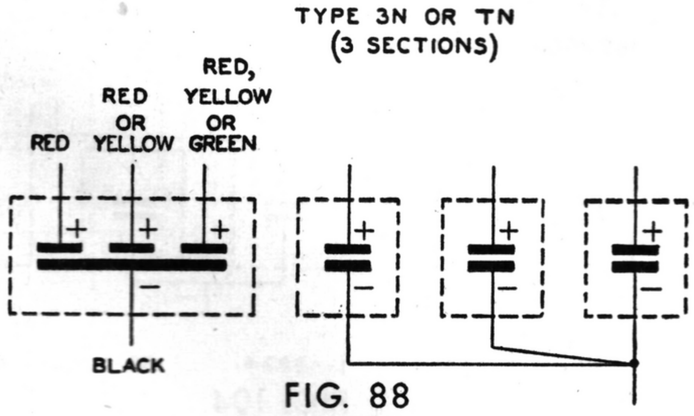

FIG. 88

TYPE 3S

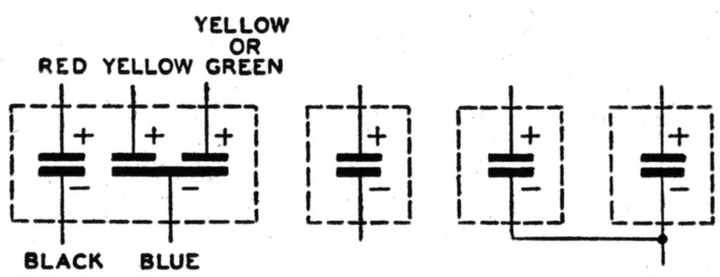

FIG. 89

TYPE 4N
(4 SECTIONS)

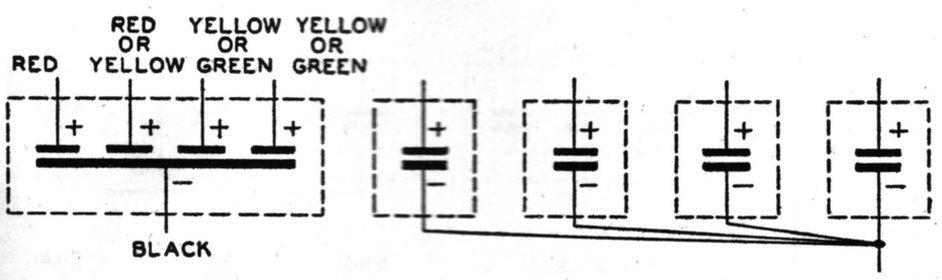

FIG. 90

TYPE 4S

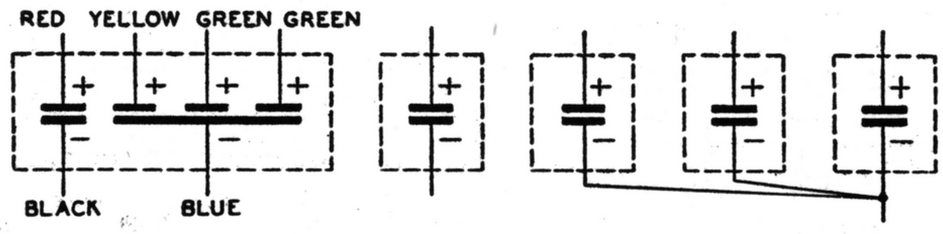

FIG. 91

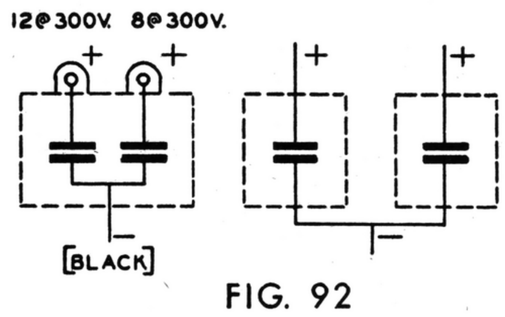

FIG. 92

SR601 [CARTON] BB64 BB61

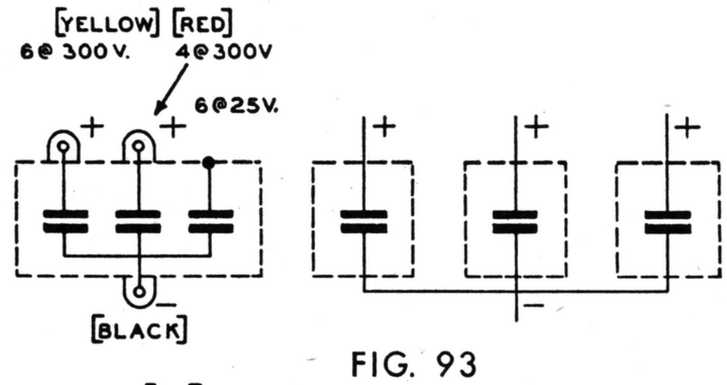

FIG. 93

SR602 [CAN] BB61 BB61 BB14

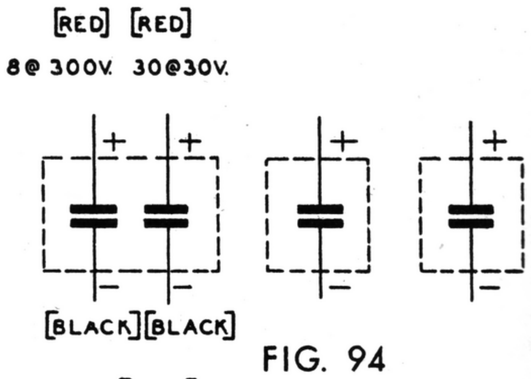

FIG. 94

SR603 [TUBE] BB61 BB27

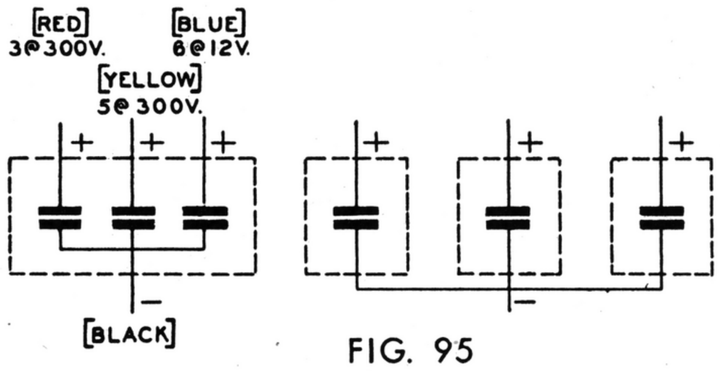

FIG. 95

SR604 [CARTON] BB61 BB61 BB14

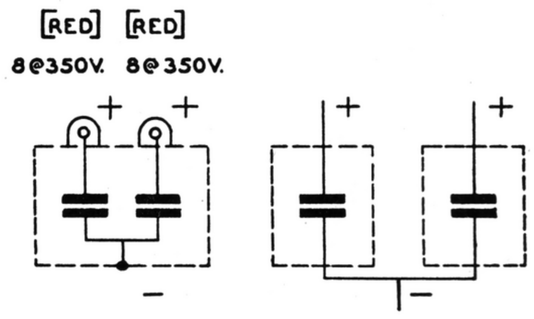

FIG. 96

SR605 [CAN] BB61 BB61

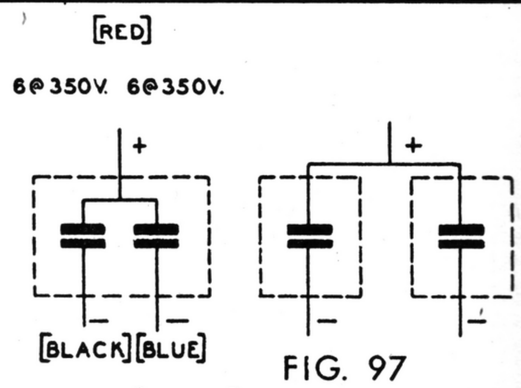

FIG. 97

SR606 [CARTON] BB61 BB61

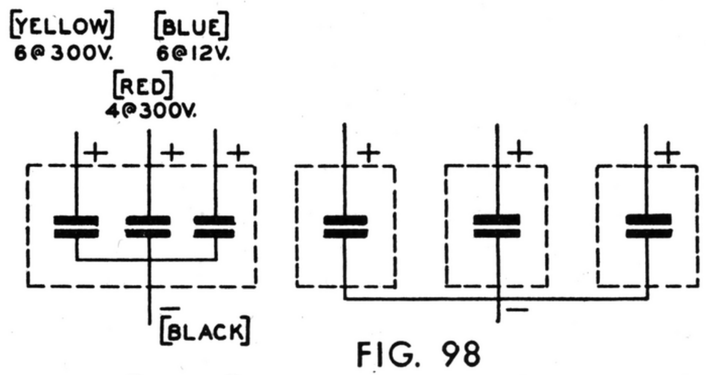

FIG. 98

SR607 [CARTON] BB61 BB61 BB14

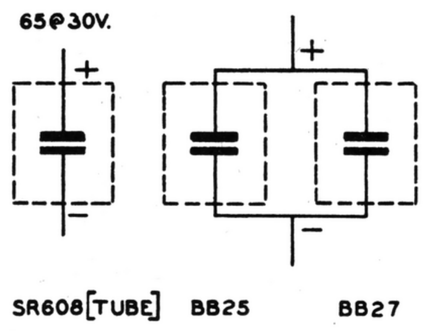

SR608 [TUBE] BB25 BB27

FIG. 99

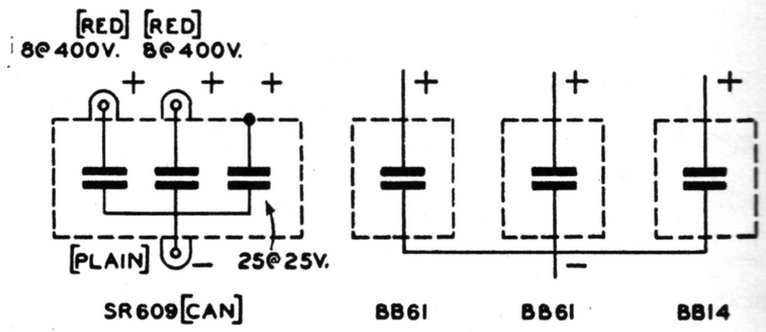

SR609 [CAN] BB61 BB61 BB14

FIG. 100

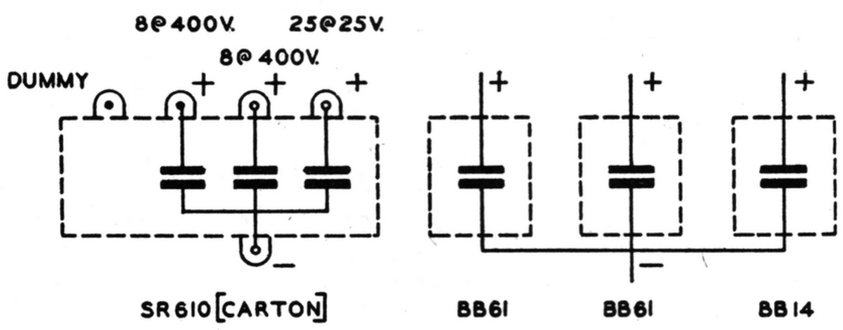

SR610 [CARTON] BB61 BB61 BB14

FIG. 101

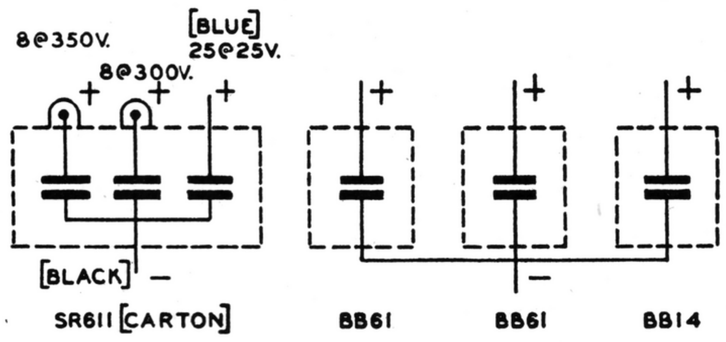

SR611 [CARTON] BB61 BB61 BB14

FIG. 102

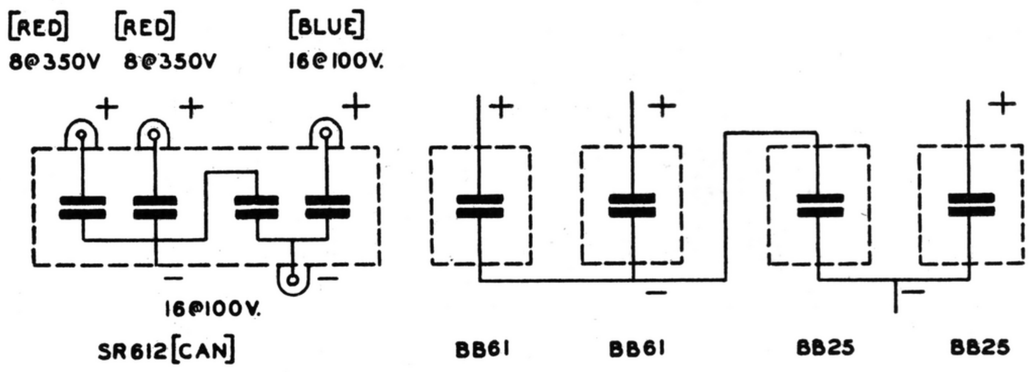

SR612 [CAN] BB61 BB61 BB25 BB25

FIG. 103

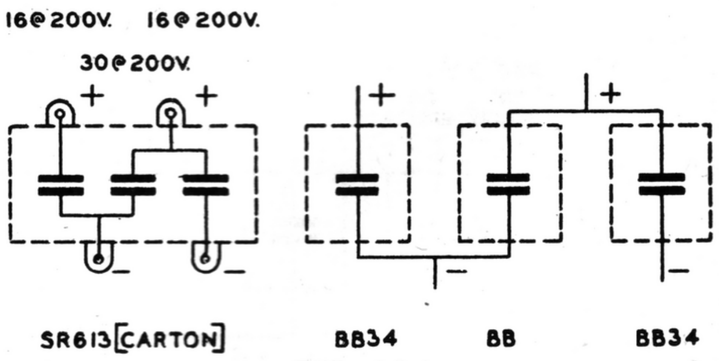

SR613 [CARTON] BB34 BB BB34

FIG. 104

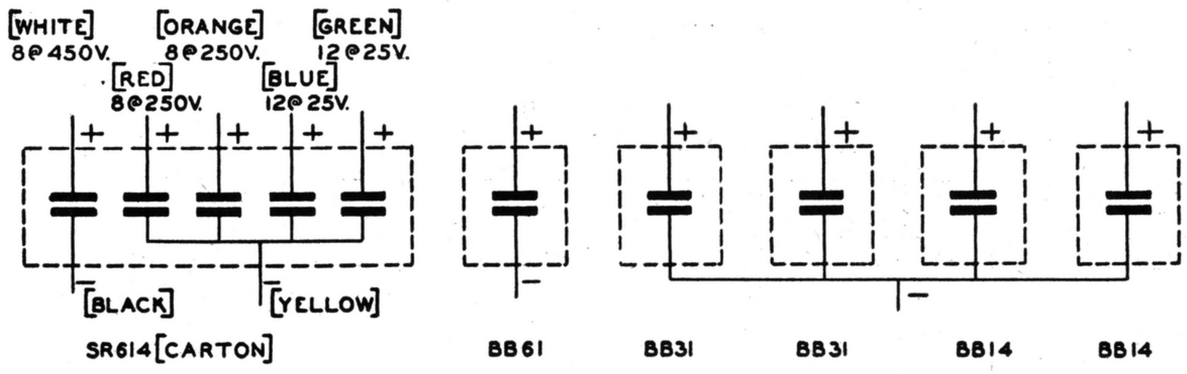

SR614 [CARTON] BB61 BB31 BB31 BB14 BB14

FIG. 105

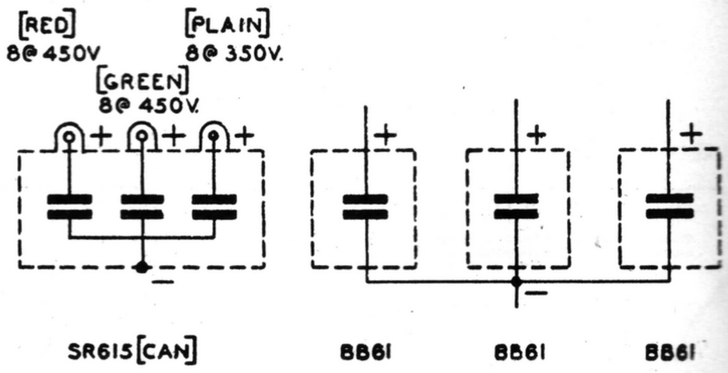

SR615 [CAN] BB61 BB61 BB61

FIG. 106

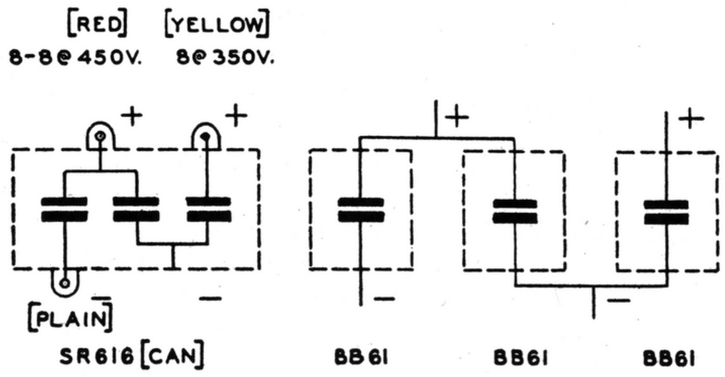

FIG. 107

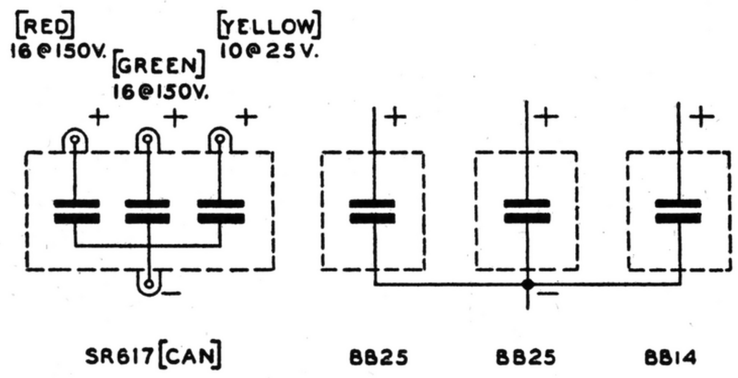

FIG. 108

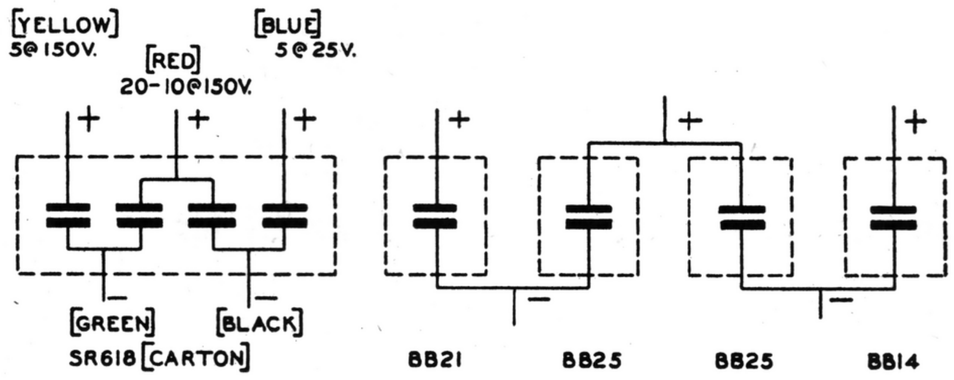

FIG. 109

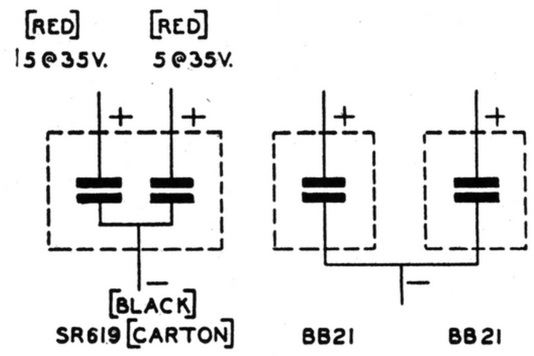

FIG. 110

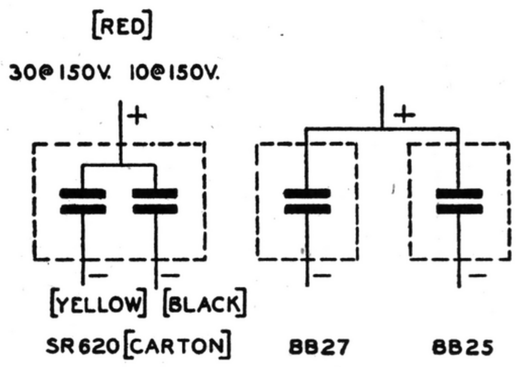

FIG. 111

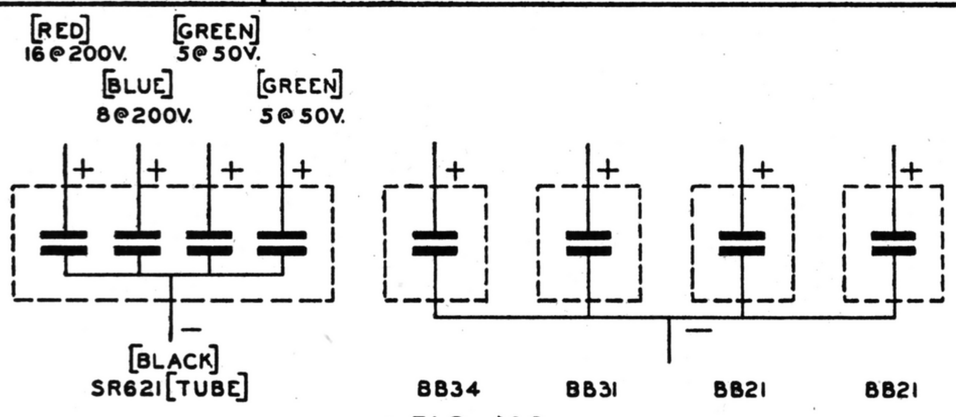

FIG. 112

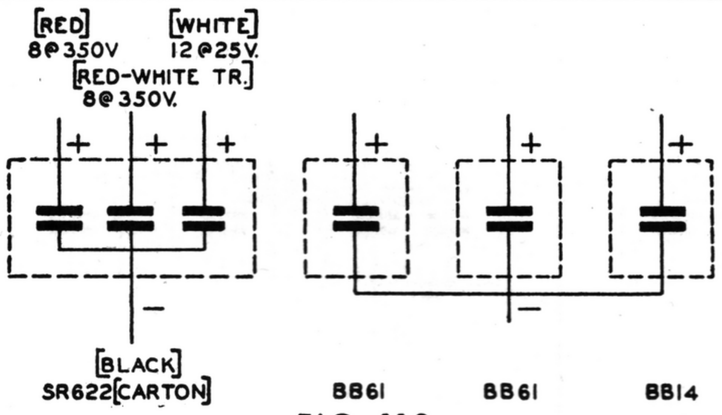

FIG. 113

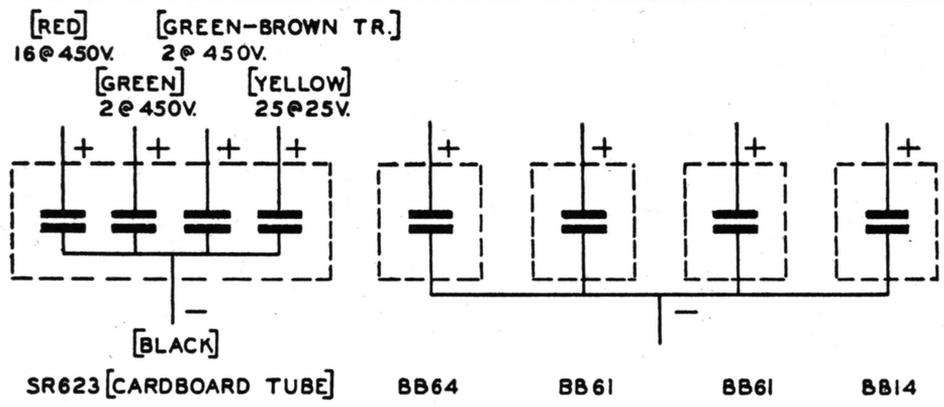

FIG. 114

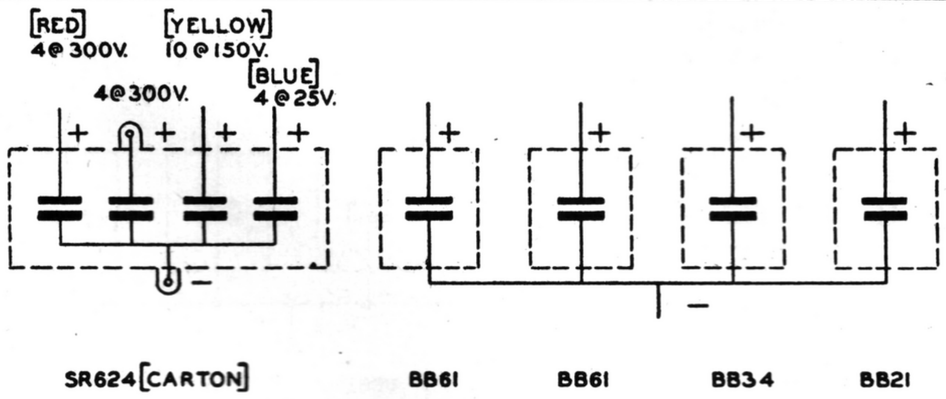

FIG. 115

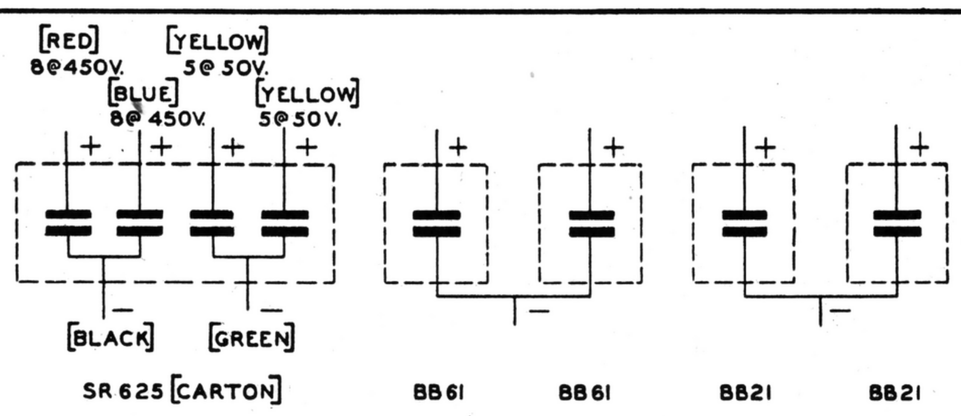

FIG. 116

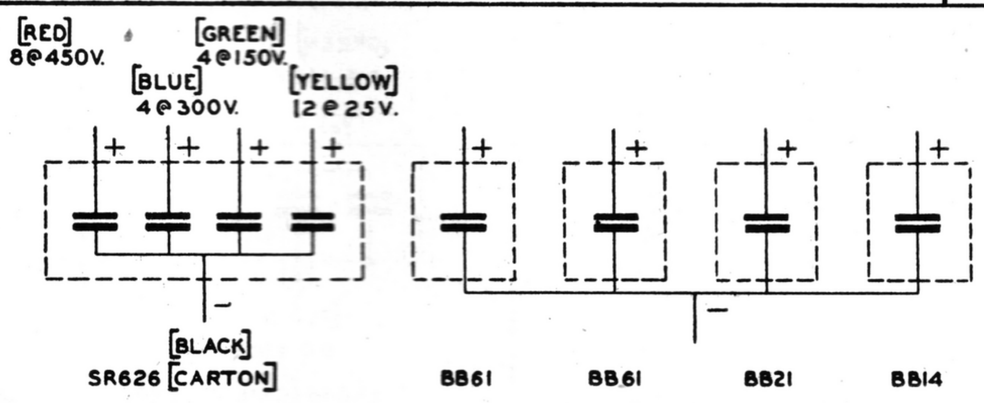

FIG. 117

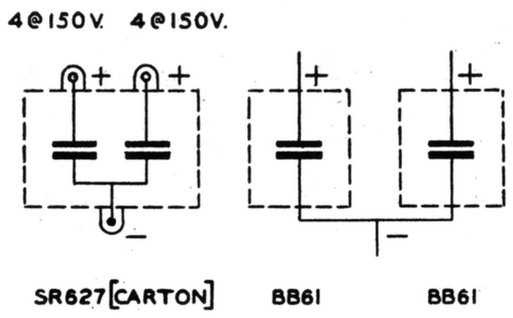

FIG. 118

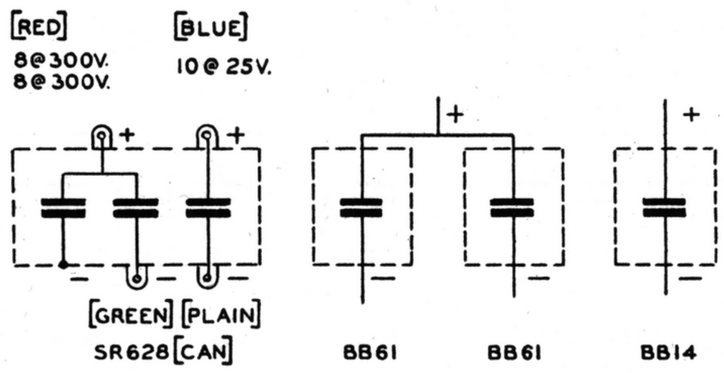

FIG. 119

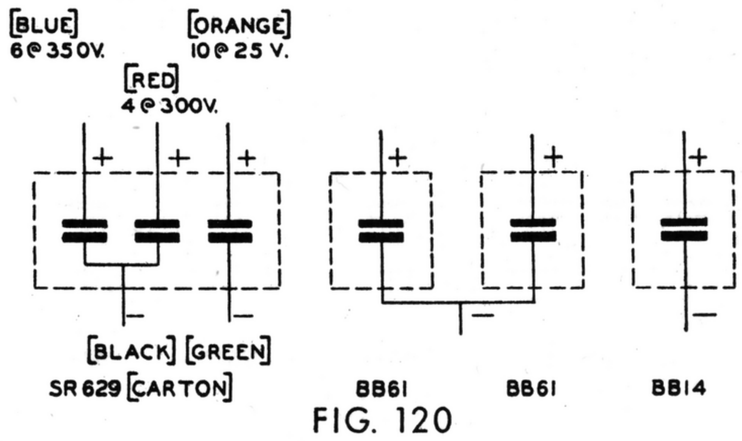

FIG. 120

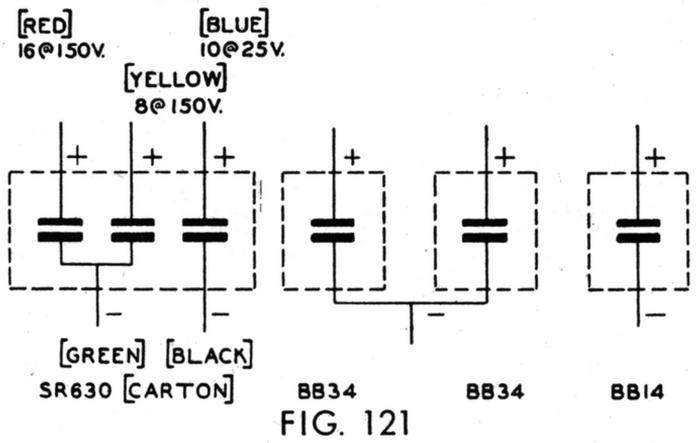

FIG. 121

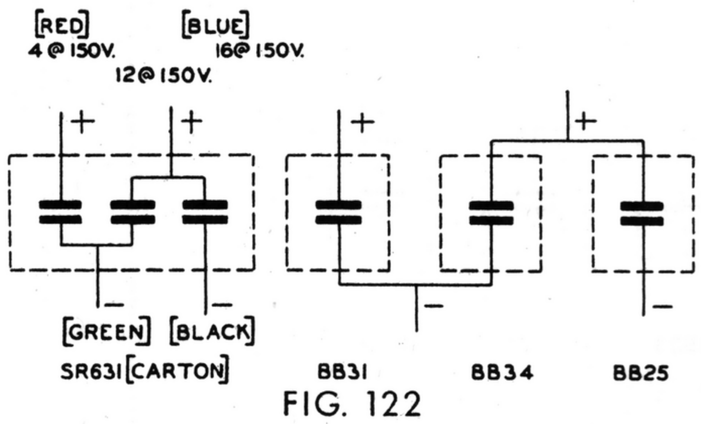

FIG. 122

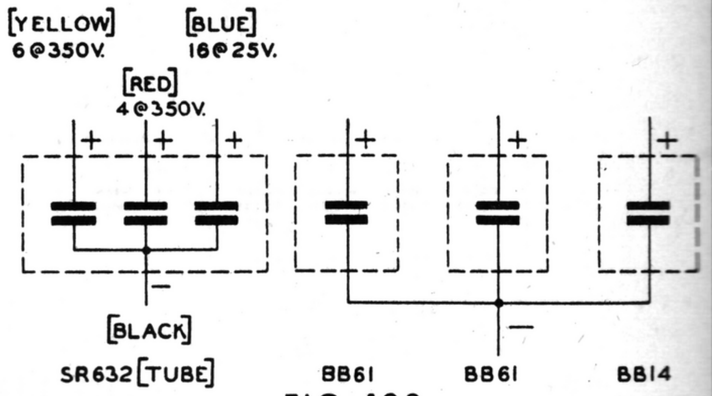

FIG. 123

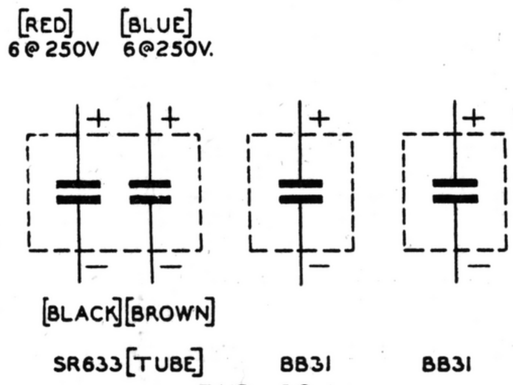

FIG. 124

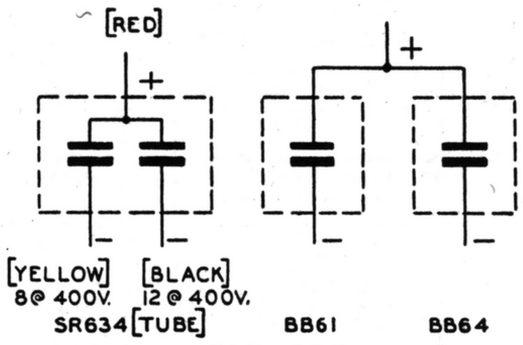

FIG. 125

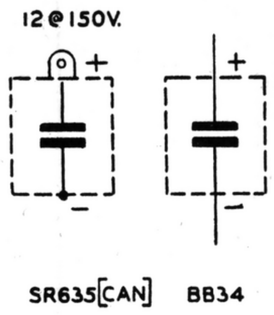

FIG. 126

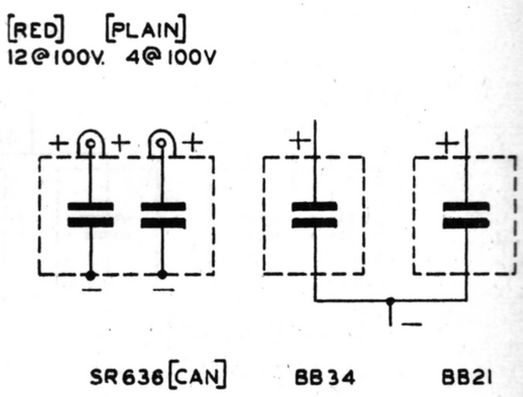

FIG. 127

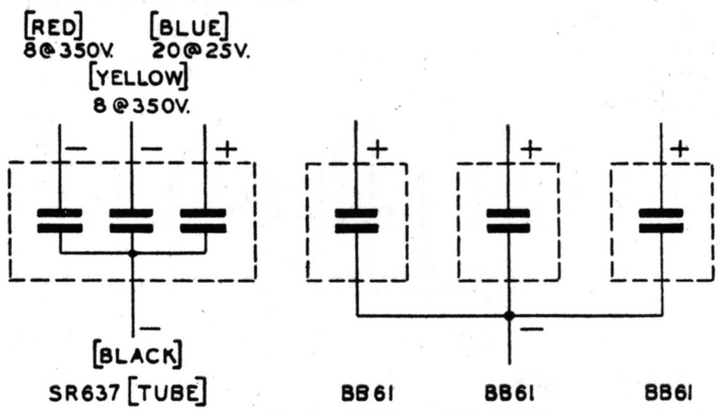

FIG. 128

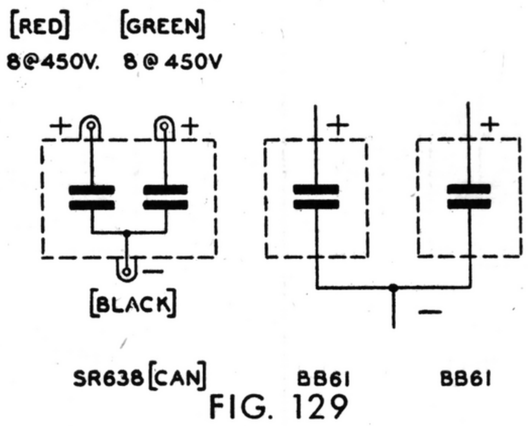

FIG. 129

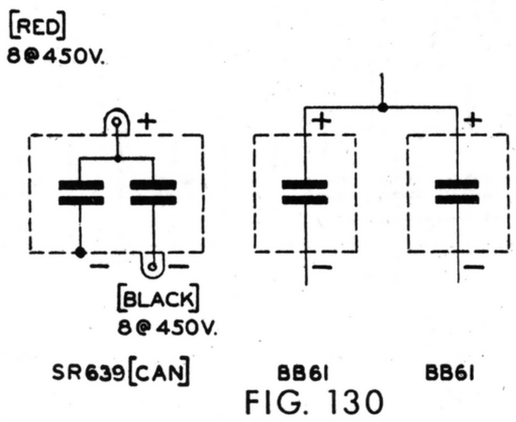

FIG. 130

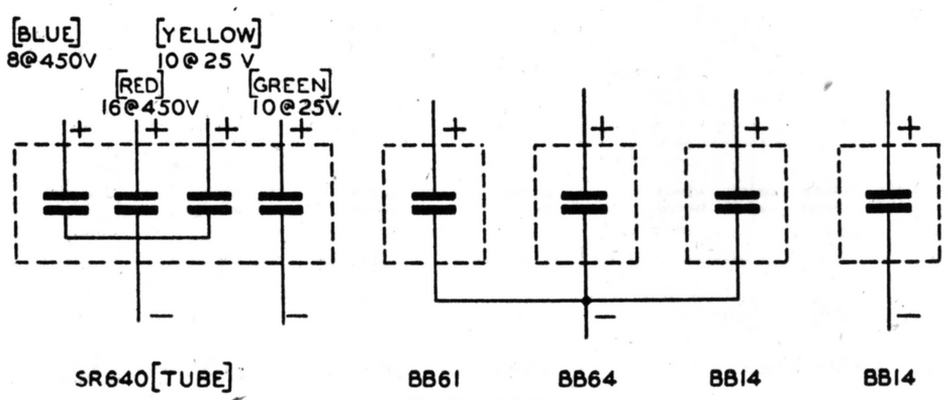

FIG. 131

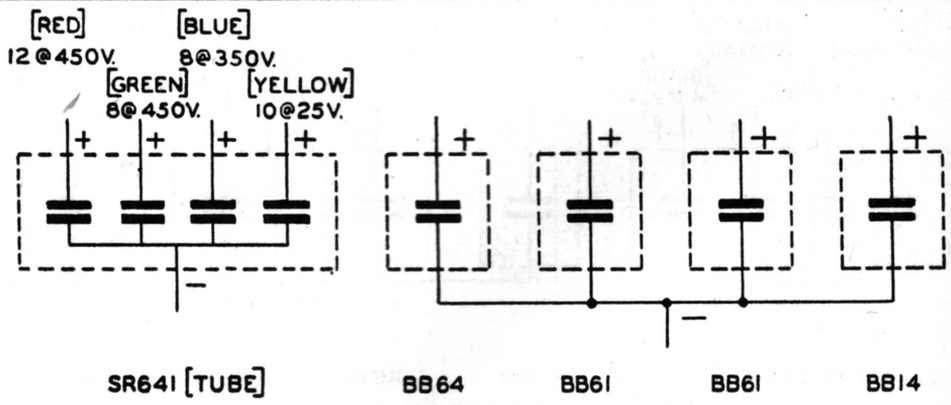

FIG. 132

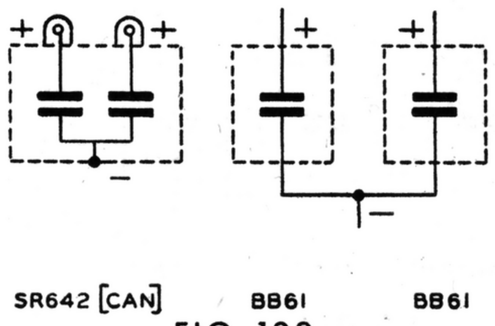

FIG. 133

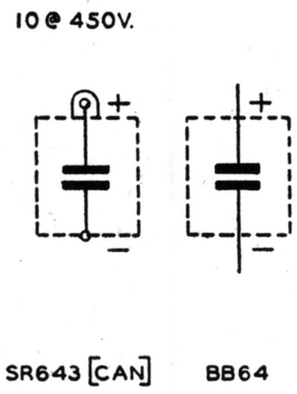

FIG. 134

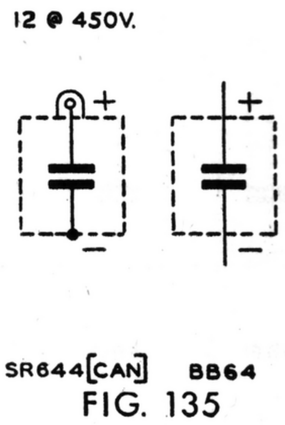

FIG. 135

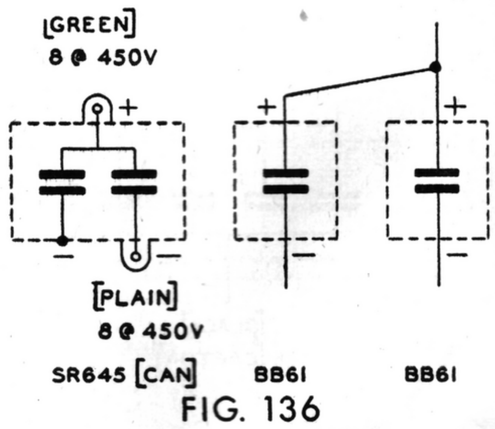

FIG. 136

• *Section* 10

THE MYE TECHNICAL MANUAL

Practical Radio Noise Suppression

P. R. MALLORY & CO. Inc.
MALLORY

PRACTICAL RADIO NOISE SUPPRESSION

For years radio listeners have endured the buzzes, roars, crackles and crashes of "man-made" static with their music, under the impression that such annoyances were inevitable. However the public has awakened recently to the fact that these "man-made static" noises can be eliminated, or reduced in intensity to the point where they are no longer annoying. As a result, numerous municipalities are passing ordinances making it a misdemeanor punishable by fine and imprisonment, to operate equipment and electrical appliances which interfere with radio reception. Some cities and towns are even employing specialists to locate and suppress radio interference.

Whether by compulsion of law, or by the force of public opinion, man-made static is on the way out. The Serviceman who understands the simple principles of noise elimination can profit amply from his knowledge. It is the purpose of this chapter to describe in simple, non-technical language the practical proven methods of eliminating all types of man-made radio interference.

All noise interfering with radio reception falls in two general classes. First, atmospherics, and second, so-called "man-made" static produced by electrical devices and appliances. Since the reduction or elimination of the former is possible only by special methods of reception and transmission we will give it no further attention, and the word noise, as used hereafter, will mean only interferences caused by electrical apparatus and appliances.

Many kinds of appliances produce radio frequency impulses which travel out through the air exactly the same as the signal from a broadcasting station. Also some appliances radiate back through the power line unless stopped by an impedance or capacity which may absorb them.

Sources of Radio Interference

Most radio noises are produced by one of three sources. First, disturbances in the power supply and transmission lines, caused by leaks to ground or other conductors through tree limbs or anything they may be touching, leaky lightning arrestors, cracked insulators, insulated tie wires, loose pieces of wire hanging on a line, or even defects in the generator. Second, by commutating devices, such as the commutators on motors and other apparatus. Third, by appliances which make and break the circuit such as thermostatic contacts on heat pads, flashing lights, incubators, and other similar appliances. Each noise source requires different treatment. Remedies for various noise sources will be given in the order named.

The general location of the noise can be determined from the following simple observation. If the noise is absent or greatly attenuated in neighboring homes, it may be assumed that the noise is originating in the building, or in the lines leading to it. On the other hand, if the noise is about equally prevalent in an entire neighborhood, it may be assumed that the noise is originating externally.

Tracing Outside Interference

It is best to always determine whether a noise is reaching the radio through the air or through the power line. This may be done quite easily by using a good portable radio working on a set of self-contained batteries. In fact there is no better noise finder than a sensitive portable radio. Since portable receivers use a loop antenna which is quite directional it is often possible to locate the source of noise by rotating the radio to the loudest point, then moving in the direction the loop is pointing. If the noise increases, you are moving toward it, and if the noise decreases you are moving away from it. However, in many cases, probably most cases, it will lead you to a point where a group of power lines converge at a transformer.

Do not make the mistake that most have made and place the blame on a supposedly leaky transformer. The odds are 100 to 1 that the transformer is in satisfactory condition, and the noise is being carried by one or more lines leading to it. True, transformers do leak and cause noise, but only in less than one per cent of the cases where they are blamed. The proper procedure in this case is to follow each of the lines and compare the noise level under each. This will generally lead to the source of the noise, or at least give a good idea as to its location. The loop of a portable radio will point in the direction from which a noise is being received until quite close to it, then the loop will pick it up best at right angles.

If the area blanketed by the interference is so large that tracing with a hand-carried portable receiver becomes excessively time consuming, assistance may be had from your automobile receiver, provided the ignition noise is well suppressed. In such cases the best procedure is to circle several blocks to find the area or areas where the noise is loudest, then use the portable radio for tracing. Pulling the main switch of a building will definitely show whether the noise maker is in that circuit or not. If the noise continues, that building is eliminated, but if it stops when the switch is pulled, the offending apparatus is on that circuit and should be very easy to find.

Transmission Line Noise

In every city and town there are numerous places where wires touch tree limbs or other objects and cause serious disturbance. Even a single leaf has been known to almost destroy radio reception over an area of several blocks. In case the leak is on the secondary side, the disturbance usually does not affect any but the homes served by that transformer, but when the leak is on a primary line it may travel all over the system and become a major annoyance over a large area.

Cracked insulators are hard to locate but a good portable will usually detect them as the pole is passed.

Insulated tie wires form high ratio step down transformers and after a year or so the insulation becomes defective resulting in considerable noise. It seems

at first thought that such a little thing could not produce noise, but it is a proven fact that they do.

"Hardware noise" results from the same effect. Here is a typical example. In this case, the noise came on in the evening in the form of a harsh buzz or hum with 60 cycle component and was so strong that radios in two adjacent houses could not be operated. The usual checking and pulling of switches showed that it was not in any of the houses and the power company was notified. Their man arrived about noon and the noise had stopped. As soon as he left it started again. The noise was on and off at odd times for several days and then appeared only at night, remaining all night. The source of the interference finally was located on the transformer pole where a steel bracket carrying an insulator barely touched another bracket supporting the transformer where they were both lag screwed to the pole. Clamping the two brackets firmly together or completely separating them stopped the noise.

Patrolling the lines many times at different hours of the day and night with the cooperation of the power company, and correcting the troubles found, will make a wonderful improvement.

Care must be taken to consider that wires loosen in day time and in warm weather, and tighten at night and in cold weather, so that a wire which clears a limb nicely at one time of day may lie against it at another time.

In this connection we want to warn **very earnestly, never touch or come within several feet of any wire unless you absolutely know that it carries low voltage.** It would be safer to allow a power company employee to handle everything near their power lines.

Power is usually transmitted at voltages of 13,500, 23,000, 33,000 and higher. Usually this is stepped down through a transformer to about 2,300 or 3,600 for distribution about the streets to other transformers which reduce the voltage to 240 with a grounded center giving 120 volts on each side, providing service to the homes. Leaks or other disturbances on the 240 volt secondary may be just as violent as on the higher voltages, but generally do not cover so much territory and are easier to locate.

The remedy for power line noises is obvious—remove the cause. When the noise-producing condition is located on the property of the public utility, *your job is only to locate the cause of the trouble and report it.* Public utility companies invariably are glad to correct any actual defective conditions of lines, poles, and transformers because not only does the elimination of radio noise produce a greater sale of electricity through the increased use of radio receivers, but also they are safeguarding their equipment by preventing causes of breakdowns.

When you find a piece of hay baling wire hanging on a power wire, **do not touch it or attempt to remove it yourself** as you will be risking your life for nothing and may accidentally short the line, blowing fuses or damaging expensive machinery. Call the power company, giving the numbers of the poles between which the wire is located and they will send a man equipped to remove it safely. They will also trim tree limbs which touch or come close to their lines when attention is called to them. However there is an old feud between tree owners and power companies, and in cases where the owner objects to trimming and it is impossible to move the wires without too much expense, it is a case of explaining to the owner that he can have either tree or radio, and in most cases he will be reasonable.

The Elimination of Line Noise at the Receiver

Conditions will be found where noise has a multiple origin so that the elimination of the noise at its source becomes either impractical or unduly expensive. Also, the owner of an offending appliance may refuse to permit the installation of a noise filter. In such cases, the only recourse is to eliminate the noise at the receiver. Mallory builds a filter especially for this purpose, type Z6 (see description, page 323), which is easily installed by plugging it into the wall socket from which the receiver is operated. The attachment plug of the receiver is then plugged into the filter. The Z6 is provided with a binding post. A wire should be attached to this post and run to the nearest good ground. This may be a water pipe, or even the screw holding the outlet box cover plate in place, if the outlet box is grounded, which will probably be the case if the house wiring is in pipe conduit. A good ground is necessary to secure the maximum filtering effect.

It should be understood at the outset that a line-noise filter can only drain the noise-producing RF energy from the power line at the point where it is attached. A line-noise filter will have no effect on noise that is picked up by the antenna, since if the antenna is in a noise field, the noise will be transferred to the receiver.

The antenna can be tested for quietness by connecting it to a battery-operated receiver. If the performance of the battery-operated receiver is satisfactory from the standpoint of noise, it may be assumed that a noise filter installed at the receiver will eliminate or greatly reduce the noise.

If the antenna is noisy, the case is by no means hopeless, since it is usually possible to relocate the antenna in a position where it will be comparatively interference-free. In most instances, the best location for the antenna will be at right angles to the power line carrying the most interference. In rare instances, it has been necessary to move the antenna several hundred feet from the receiver to secure a noise-free installation. Such remotely located antennas require the use of a shielded lead-in, preferably of the co-axial type, with suitable coupling transformers.

Lead-in Noise

An ordinary exposed-wire lead-in will act as a part of the antenna, and may contribute more noise than the antenna itself, because a comparatively strong coupling may exist between the lead-in and house wiring carrying noise.

There are two ways of attacking noise that is being picked up by the lead-in. The most obvious method is to use a shielded lead-in. A noise filter at the receiver will help lower lead-in noise pick-up since the presence of the filter on the line will lower the RF potential of all the associated house wiring in the immediate vicinity.

Further and usually effective help can be obtained by installing a second filter in the house wiring near the point where the service wires enter the build-

ing. This prevents the entire house wiring system from acting as a transmitting antenna for any incoming noise from the outside power line. It is often the radiation from the house wiring that is picked up by the lead-in or loop of the receiver, that causes the real trouble. If the noise can be stopped at the entrance to the house wiring, the source may then be so far removed as to be inconsequential.

The simplest and least expensive installation of this kind consists of mounting a capacitor type filter, Mallory W11 (see page 322 for description) in the fuse box of the house. Bolt the mounting strap of the filter to the fuse box, first scraping the paint from the box to insure a good, low resistance connection. For a two-wire installation connect each lead of the filter, type W11, to a fuse holder terminal on the load side. A three-wire system with grounded neutral is handled the same way except that the filter leads connect to the two "hot" wires only. A three-wire installation, either three-phase, or with an ungrounded neutral, will require the use of two filters, type W11, one lead from each filter connecting to the third wire. The remaining leads of the two filters are then connected to the other incoming wires, all connections being made to the load side of the fuse holders.

For a truly de luxe installation of this kind, the entire power supply of the building could be filtered with a combination inductance-capacity filter such as the Mallory type LB40 (see description, page 323) providing the maximum current does not exceed 40 amperes. Such an installation would provide maximum isolation between the building wiring and the outside service wires. This arrangement would be especially suitable for police radio stations where the best possible reception of weak high-frequency signals is desired.

Appliance Noise

Noise-Makers in a Typical Town of 5,000 Population

325 Vacuum Cleaners
70 Fountain Drink Mixers
65 Electric Drills
50 Home Mixers
30 Stationary Motors of various kinds
15 Hand Sanders
25 Washing Machines
25 Neon and Flashing Signs
35 Electric Shavers
30 Electric Sewing Machines
10 Electric Cash Registers
9 Electric Refrigerators
5 Violet Ray Machines
5 Dentist's Drills
2 X-Ray Machines
1 Garage Spark Plug and Coil Tester
1 Flat Iron with Automatic Heat Control
10 Miscellaneous Interferences

The above noise-makers were actually found in one town and indicates generally what may be expected for each 5,000 population. Among the 10 listed as miscellaneous are some unusual things to be dealt with later. The term "noise-makers" refers to appliances actually found to be making objectionable noise—the list does not include appliances of similar types found to be reasonably noise-free.

Commutating Devices

Commutating devices from the largest motor down to electric razors are responsible for various degrees of interference. Large three-phase motors seldom produce enough interference to worry about. In fact few large motors of any kind are very bad, and motors having no brushes or commutators do not interfere at all, unless defective.

Brush type motors, either shunt, compound, or series wound produce noise, the violence of which varies inversely with their size and directly with their speed. The little drilling and engraving tool which is held in the hand is an example of the worst interference to be found. Brush type barber clippers are practically the same, and several types of electric shavers, especially those using a direct make and break commutator are also in the same class.

Thermostats on heat pads, incubators, electric irons, and various kinds of flashing lights are a serious nuisance. Cases have been found where a heat pad practically ruined reception all over a town of 2,000 for weeks. Flashers on a single small lamp interfere with radios in the same house or on the same circuit but rarely reach out far enough to annoy the neighbors.

Ability to identify and locate these disturbances comes with practice and after a few months of constant practice, one can tell quite definitely from the sound, just what kind of apparatus is producing it.

Silencing Commutating Appliances

The simplest standard filter for stopping or tuning radio noise out of range of the radio receiver consists of two condensers connected in series across the electric line, with their center point grounded, and installed close up to the apparatus. In this case ground does not mean earth, but the metal frame of the machine. True, it is good practice to ground the frames of all motors and other electrical apparatus to earth through a water pipe or other good connection, but such grounds seldom reduce noise very much unless the connection to earth is short.

P. R. Mallory & Co. now is producing, at reasonable cost, suitable pairs of capacitors scientifically placed in metal cans with mounting brackets having greater superiority in compactness, ruggedness and ease of application than individual condensers. Since they are designed for continuous service across an A.C. line, these special twin capacitors have extra heavy insulation so that they will be durable and trouble-free. Special care has been taken in the design of these units to provide the lowest possible RF impedance. Metal cased twin capacitors for radio noise suppression service may be purchased as Mallory Noise Filters, types W7, W7A, W9, and W11. (See description, page 322.)

Practically all of the stationary appliances can be silenced by filters containing two capacitors of suitable value. However we find some appliances, such as mixers, electric drills and sanders which must be held in the hands while using, and for them the twin condenser filters are unsuitable because when the operator gets on a damp floor or touches some grounded object he may be subject to a small electrical shock.

This makes necessary another type of filter containing a third condenser connected between ground (the can) and the common connection of the other two condensers which are in series across the line. This third condenser only slightly reduces the filtering effect.

The shock-proof, three-capacitor types

of noise filters are available as Mallory types W7SP, W9SP, and W11SP.

Since noise or radio interference is RF energy it can be attenuated by inductance in the circuit. In many applications, the windings of the appliance may possess considerable inductance so that the combination of the appliance windings plus a capacitor-type filter will provide a complete capacitor-inductance filter of high efficiency. However, where the inductance of the appliance is low, or where a greater filtering effect is required than obtainable from the addition of capacitors alone, combination inductance-capacity filters are used. These filters employ RF choke coils in addition to the usual condensers.

Mallory filters of the combination inductance-capacity type are catalog Nos. Z2, Z4, Z6, Z8, Z8A, LC5, YC10, and the heavy-duty box type filters LB5 and LB10.

Another noise suppressor of a different type is used on oil burning furnace igniters, spark plug and coil testers, and in other places where high frequency and high voltage are present. These will be described fully later in this text.

It has been quite customary for filter manufacturers to recommend that capacitor-type filters be connected to the brush holders, and for some types of motors or generators this probably is the best connection. However, for small motor-driven appliances equally satisfactory or even better results will usually be obtained by simply connecting the filter leads to the motor power leads as close as possible to the point where they leave the motor. The two most important points to be observed when installing a capacitor-type filter, or a noise filter of any type, is that the minimum length of wiring be included in the exposed leads, and second that a really good ground connection be made to the motor frame. On some types of filters, the ground connection is automatically made when the mounting strap is bolted to the motor or appliance frame. When using such filters, the paint or enamel should be carefully scraped from the appliance or motor frame at the point where it contacts the filter mounting strap to insure a good, low resistance electrical connection.

We will take up the various appliances in detail, in order, according to the number in use and give detailed information concerning them.

Vacuum Cleaners

Vacuum cleaners, being more numerous than any other electrical appliance, cause a very large percentage of the total radio interference. Each one contains a small, powerful brush type motor which turns at high speed causing terrific noise over an area varying with the location, the climate and the condition of the motor. For example, in Northern Michigan where reception is not too good, places were found where a vacuum cleaner could be heard with annoying volume all over a small city. In other localities where reception is better, the volume control of the radio would be run much lower, and the same cleaner probably would not interfere seriously at a distance of over one block. However with several cleaners in each block, each used at least 15 minutes a day, they become a major problem.

Since vacuum cleaners are used on dry floors, the Mallory W7 filter consisting of two condensers in series, with common grounded to the can may be employed with very satisfactory results. The leads are connected across the line at or near the point where it enters the case and a screw is raised and tightened down on the mounting bracket. This must make good contact to the metal frame of the machine, and if no screw is available, a hole must be drilled and the bracket fastened with a self-tapping screw. Care must be taken not to drill into the windings, and to see that the filter does not interfere with the handle bracket or other moving parts. Many cleaners have a pair of binding posts on the case covered with a stamped metal cover, making the connections easy by removing the screw that holds the cover. Others have a spring wire shield around the cord, extending from the case to the lower end of the handle. This can be pulled loose from the handle and slipped back far enough to splice on the filter leads.

Little difficulty will be encountered in silencing most cleaners, and in four cases out of five a Mallory W7 will do a satisfactory job. Occasionally a bad one will require more capacity and can be taken care of by a W9 or W11. These two filters are similar to the W7 except that the capacities are higher.

Some models of Hoovers are hard to silence, especially the two-speed type. Some of these have bakelite cases and one must be careful to find a ground that is really grounded to the metal frame, otherwise the filter will have little or no effect. In the two-speed type you will find three wires crossing the front under the outside cover and directly under the lamp. Usually a .25 mfd. condenser from each of these wires to ground will make a satisfactory job. There is little room and it's a tough job, but can be done.

Use the W7SP shock proof type on the little cleaners employed for upholstery as there is more danger of shock from them.

Plug type filters on the far end of any long appliance cord, especially cleaners, are less effective than filters mounted directly on the appliance. While they may keep the interference out of the electric light line, there may be twenty feet of cord left to radiate the noise and part of the effect of the filter is lost.

Drink Mixers

The next most serious and numerous radio interference producers are fountain drink mixers, consisting of small motors mounted on cast-iron pedestals about fifteen inches high. These devices may be seen in groups behind almost every soda fountain. The mixers employ small, high speed, brush type motors. With a few of these operating in each block radio reception is almost impossible.

Since these machines are usually operated by girls standing on a wet or damp floor who frequently touch the machines with wet hands, the installation must be absolutely shock proof. Use a W7SP or W9SP across the line inside the metal frame wherever it will provide sufficient filtering. For the most severe cases of interference, use a Z8A if the filter may be bolted to the frame of the mixer. Otherwise, cut the A.C. cord close to the motor and install male and female plugs on the cord ends so that a Z8A may be inserted in the circuit. In all cases it is preferable to have the filter or condensers connected to the load side of the switch, that is, so that the condensers are not across the electric light line except when the apparatus is in use.

If an A.C. milliammeter is placed in series with a 1 mfd. condenser across a 120 volt 60 cycle line, it will show a load in the order of 50 milliamperes which might lead us to believe that it was pulling and wasting something like 6 watts. However this is not the case, for the energy the condenser stores on one-half cycle is put back the next, wasting only the power factor loss which in well constructed paper dielectric capacitors is negligible. Therefore the loss through any good condenser across the line is negligible. It is preferable to place noise filters on the load side of the switch, when an appliance is operated at intervals, merely to prolong their life rather than to save power.

Electric Drills and Sanders

Electric drills, used mostly at garages and machine shops, and hand sanders which are essentially the same thing except that instead of turning a drill they turn a sandpaper disc, cause very bad interference, quite similar to drink mixers. Sanders are almost always in a noisy condition due to grit getting inside and chewing up the commutator, brushes, brush holders and bearings. Drills are usually in a better condition.

These appliances are a serious problem for since they are used on damp floors and must be held in the hands they must be shock proof. At the same time they require a considerable amount of filter with little space for mounting it. These devices are handled roughly and a filter must be mounted securely in order to avoid being knocked off within a few days, also anything on the outside is likely to be in the way of the operator. Most electric drills and hand sanders are factory equipped with a three-conductor cord, the third conductor being intended for use in grounding the frame of the appliance. However few garages make provision for this ground connection at the socket. Further, when the cords get old and worn, mechanics almost invariably make replacement with a standard two-conductor cable. For these reasons it is imperative that a shock-proof filter such as the W7SP or W9SP be employed. In some instances it will be possible to mount the filter inside the handle, or within the end cap of the motor housing.

If a satisfactory location cannot be found for mounting the filter on the drill, then recourse can be made to the Mallory Z8 filter mounted at the far end of the cord. A three-wire cable should be used for the drill or sander, the third wire being employed as the return lead between the filter and the appliance frame. The best arrangement is always the one which uses the shortest return wire to the appliance frame.

Home Food Mixers

Home mixers are in the same class with electric drills. However in most cases there is no room for condensers inside and little space outside for satisfactory mounting. Women do not like to have their appliances look unsightly, therefore care must be taken about appearance. The neatest and probably the most effective installation for home mixers is to use the Mallory Z8 noise filter. Installation is made by cutting the A.C. cord close to the motor, then installing male and female plugs on the cord ends so that the filter can be inserted in the circuit. If the design of the mixer is such that the filter may be bolted directly to its frame, filter types W7SP, W9SP, or Z8A may be employed, the choice depending on the severity of the interference.

Large Motors and Generators

Large alternating-current motors used for the operation of heavy machinery seldom produce much interference; some types such as three-phase induction motors which have no slip rings or commutators are inherently noise-free. Single-phase motors of the shaded-pole and capacitor types are also noise-free when not actually defective. Repulsion start induction motors normally produce interference only during the starting cycle, although if the motor parts are badly worn they can create a terrific continuous racket. In such cases the wise thing is to see that the motor is properly adjusted before attempting to apply noise filters. In general, however, brush type, series, shunt and compound wound A.C. and D.C. motors and generators are the principal noise-makers.

The large, box-type Mallory Noise Filters types LB10, LB20 and LB40 (see pages 10-15), intended for installation in the power line near the motor, are recommended for permanently connected motors and generators with loads up to 40 amperes, maximum, and 230 volts A.C. or D.C. maximum. Larger motors whose power requirements exceed the values given require special treatment described later. The installation of the appropriate LB filter will probably reduce the noise to a negligible value—if not, the installation requires the connection of W11 filters to the brush-holders as shown in Fig. 1.

Generator field excitation control leads will conduct and radiate interference. These can be easily dealt with by by-passing at the point where they leave the generator housing with a type W11 filter providing their potential does not exceed 230 volts. If it does, use two .5 to 2 mfd. metal-cased transmitting condensers of appropriate working voltage rating, connecting each between one lead and the motor frame.

For motors and generators having current above 40 amperes, the connecting wiring may be used in place of chokes. This calls for two sets of by-passes—one set at the motor or generator, the second set at the fuse box, or at a farther distance, the most effective location being chosen by experiment. For three-wire service with a grounded neutral it is usually necessary to by-pass only the "hot" wires. The filter at the motor or generator is grounded to its frame. The filter on the line should be grounded to the conduit, and the conduit grounded to the earth at the common connection.

Mallory Type W11 filters can be used with potentials up to 230 volts, A.C. or D.C. For higher potentials use standard metal-cased transmitting capacitors of .5 to 2 mfd. size, 1,000 W.V. rating for 330 volts A.C., 2,000 W.V. rating for 440 volt A.C. For D.C. service the working voltage rating of the capacitors should be approximately 50% or more than the working voltage of the motor or generator to give a factor of safety for voltage surges.

The usual precautions should be observed regarding the placement of filters to secure short direct leads, and to secure a location which will afford the maximum protection against mechani-

cal injury. The frame of any motor or generator should be grounded.

Noise in the A.C. leads from an alternator will frequently have its origin in the small D.C. generator that is used for field excitation. Consequently when working on A.C. generating systems it is well to clean up the interference of the exciter unit before investigating the alternator.

BRUSH FILTERS FOR LARGE MOTORS

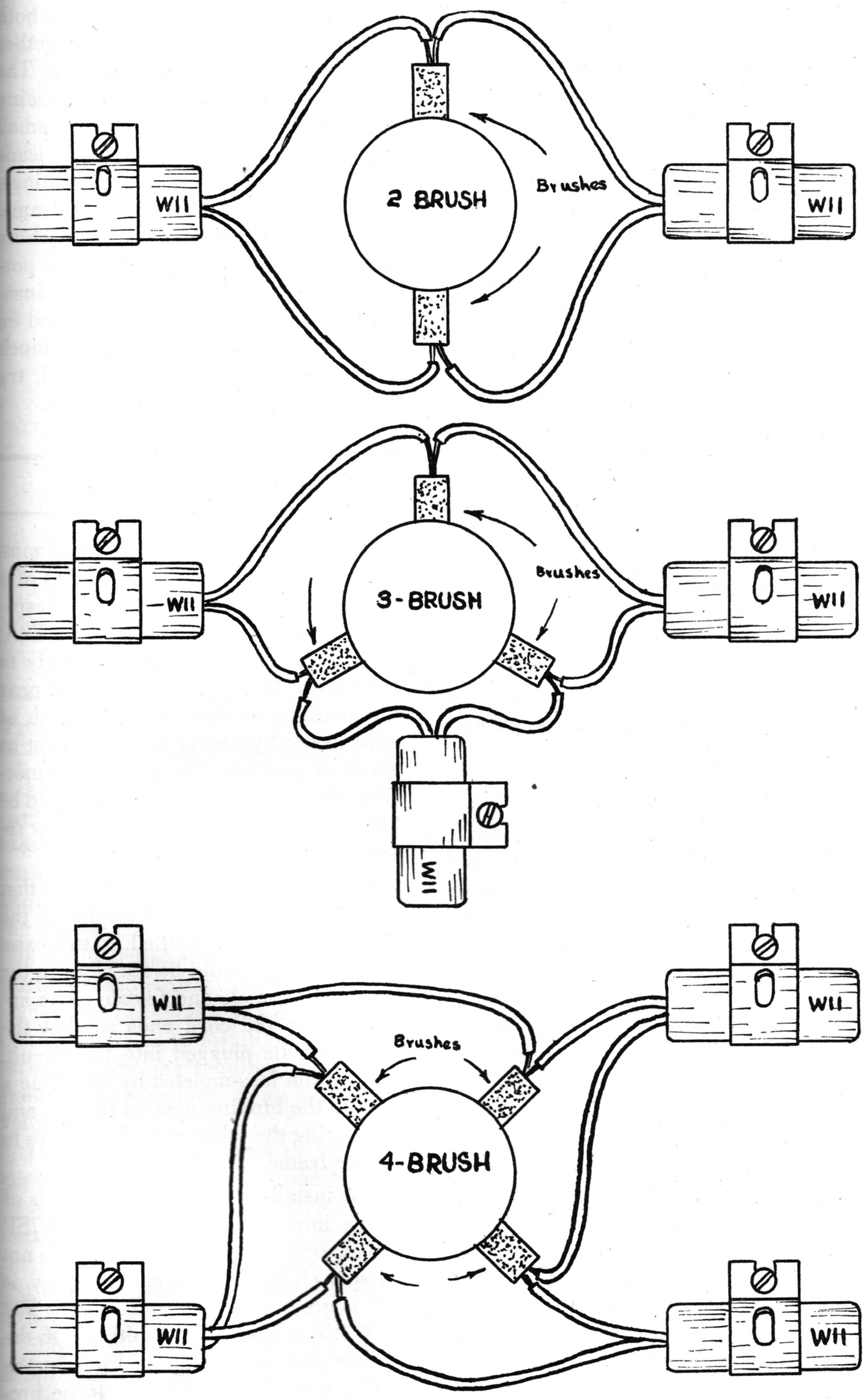

Fig. 1

In the case of gasoline engine driven generators, the electric ignition system of the gasoline engine may create interference in the power line. Such interference can be eliminated by using automobile spark plug suppressors, and by applying exactly the same treatment as would be used in silencing an automobile electric system to permit the installation of an automobile receiver.

Washing Machines

Most washing machines employ electric motors which are inherently noise-free. Probably less than 10% are noisy, and normally no difficulty is encountered in silencing these because of the availability of ample mounting space for any desired type of filter. Washers are generally used in basements, and because contact can be made between the frame of the washer and grounded metallic objects such as a water faucet, it is necessary that the filter should be of the shock-proof type.

Most machines can be silenced with a filter type W7SP, mounted on the motor frame with its leads connected to the A.C. line. For more severe interference use type Z8A for loads up to three amperes, type LC5 for loads up to five amperes.

If an ironer attachment is used, care should be taken that the load of the heating element is not carried by the filter.

Before installing noise filters on any appliance, be sure that it is in a satisfactory operating condition. Excessive flaring or flashing on the commutator of a brush-type motor should be taken care of by replacing brushes, adjusting brush holder springs, and if necessary by turning the commutator and undercutting the mica.

Neon Signs

When notified their signs could not be installed in a certain city unless it was demonstrated that each sign did not interfere with radio reception, one neon sign manufacturer said in effect:

"The reasons are obscure why some neon signs create radio interference. We do know that when we may make up one hundred practically identical signs, half of them will be noiseless while the other half will be noisy."

The information given in this section represents the opinions of two practical radio noise experts who have been outstandingly successful in clearing up all types of interference. It is recommended that this section be read with special care since the procedure is quite different than that used with other appliances.

In checking about 1,000 neon signs it was found that less than one out of 20 radiated much interference. Practically all of them could be heard on a portable radio at a distance of up to ten or twelve feet with annoying volume, and a few for about 100 feet. This applies to signs in good condition and working properly. However, most all of them fed noise back through the A.C. power line reaching, in some cases, to every building served by the same transformer. The direct radiation through the air of a properly working sign seldom reaches far enough to seriously annoy anyone but its owner, who might have a radio within a few feet of it.

The procedure with a noisy sign is first, to listen to it on a portable radio, then try the electric radios in the buildings surrounding it to gain an idea as to how much is radiating through the air and how much through the power line. Then watch the sign for flicker. If there is a noticeable flicker it is an indication that the transformer does not give enough voltage to light it. There may have been enough voltage when the sign was new, but after some use more voltage is required to properly light it, and a flickering sign is almost impossible to silence. The remedy is to have the tubing repumped and refilled with new gas.

The next step is to disconnect the leads from the secondary of the sign transformer, turn the A.C. supply on and listen for noise. If there is a frying sound it indicates that the transformer is leaking and should be replaced. It is sometimes possible to silence leaky transformers, but the transformer will eventually have to be replaced anyway.

May we remind you that **voltages from neon sign transformers are deadly and the primary connections to the power supply should be completely disconnected before touching the secondary.** The voltages used range from about 6,000 volts up to 25,000 volts or even more for large signs.

Place a W7 or similar filter across the primary terminals grounding the bracket to the transformer case or frame, turn the sign on and listen again on both the electric and portable radios. Unless it is a very bad case the electric radios 25 feet away (antenna included) should get the noise very faintly or not at all. While still listening ground the transformer case to earth and if it makes an improvement, make the ground permanent. Quite often this is all the sign requires, but if the noise still persists examine the tubing carefully for leaks at points where the tubing crosses itself. In large letters or loops where the tubing crosses, high frequency energy may leak through the glass, partly short circuiting that letter or loop. Such leaks can be located easily by placing a sheet of paper between the tubing loop. If leakage is occurring, a rustling sound will indicate that the current is breaking through the paper. Sometimes these leaks can be cured by fastening a piece of glass between the turns, but the sign should be made so that where the tubing crosses there should be spacing of more than half an inch, so that leaks cannot occur.

If tests show that the W7 filter does not prevent noise from backing up in the A.C. line, a combination inductance-capacity filter can be installed for greater filtering effect. For loads up to 3 amperes use a type Z8A if the filter may be bolted directly to the core of the power transformer, use type Z8 if the filter must be inserted in a cord. When using the Z8, cut the A.C. cord close to the transformer, and attach male and female plugs to the cord ends. The return lead from the filter should make a good connection to the transformer core.

For permanently connected signs having a load in excess of 3 amperes, use an LB filter of appropriate capacity.

As a last resort try touching the tubing at different points along its entire length. You will likely find a spot where the noise is completely eliminated as long as you hold your finger on that spot. Wind several turns of fine wire (about No. 30) around this spot and try the other end of the wire to other points on the tube. Hold it with a split stick about a foot long, so that the capacity of your body does not interfere and when you find a spot where the noise is greatly reduced wind several turns about that spot and stick it fast with Duco or some similar cement. This is called balancing out the noise and sometimes does wonders, but some experts do not consider it a very satisfactory way of getting rid of noise. Sometimes grounding the wrapped wire to the frame will silence the sign.

In some cases a sign may have both terminals at one end so close together that there is a leak between them. The remedy is to either increase the spacing or put glass between them. Other small signs may be suspended by the leads which may be tied around other things, such as nails in the window frame. These leads should not touch anything except glass and as little of that as possible, even though they have heavy insulation on them. Many are suspended on chains. A good grade of cord is much better, but if chains must be used, try grounding and ungrounding them.

Fluorescent Lights

Fluorescent light interference is comparatively easy to handle by means of a filter which Mallory has developed especially for this application—type Z8A. This filter should be bolted directly to the fixture (see Fig. 2) at a point near the auxiliary so that the total length of wire in the by-passed circuit is kept as short as possible. The ground connection to the frame of the fixture should be carefully made to insure a good, low resistance connection.

If the design of the fixture is such that it is impossible to bolt the filter to it, the type Z8 may be substituted. In this case, the A.C. cord should be cut close to the fixture, then male and female plugs are attached to the cord ends so that the filter may be plugged into the circuit. Installation is completed by attaching a wire to the binding post on the Z8, and connecting the other end of this wire to fixture frame.

For installation where economy is of prime importance, the W7, or W7SP can be used, but since these filters do not possess choke coils, their efficiency is not as great as the Z8, or Z8A. The W7 or W7SP is installed by bolting it to the fixture and connecting its leads to the A.C. wires. The type W7 is to be preferred unless a shock-hazard exists.

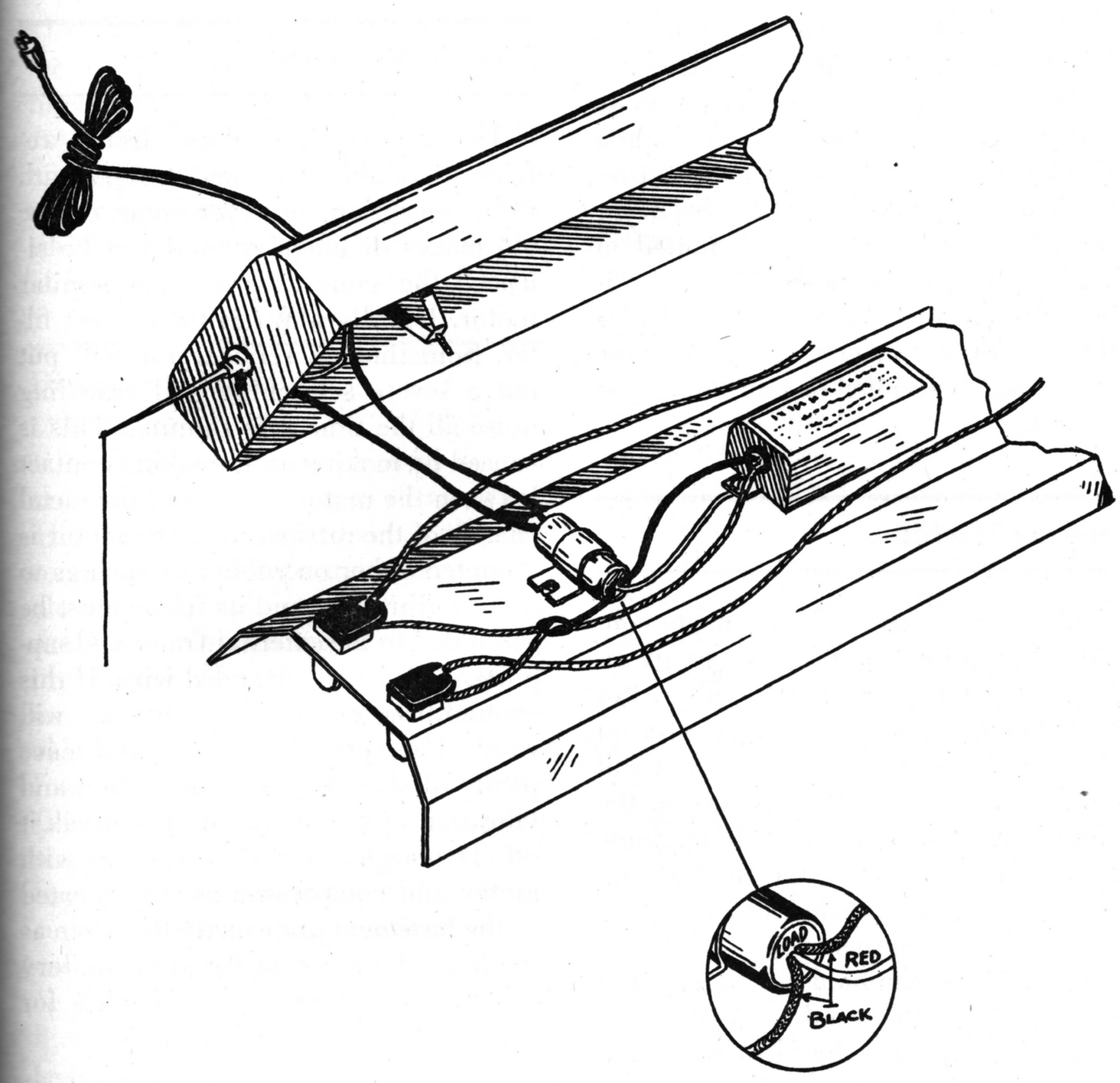

FIG. 2

Traffic Signs

Flashing signs, such as are used on caution signals for street traffic, can create interference which will disturb an entire neighborhood. Such interference is not difficult to eliminate, but owing to the variety of conditions encountered and the distribution of the components, the treatment will vary with different installations. For economic reasons it is of course desirable to install only such filtering as may be required to actually reduce the noise level to an acceptable value.

Therefore, the problem of interference suppressions will be treated step-by-step in five stages. The service engineer should test after each step, carrying the procedure far enough only to wipe out the interference. Fig. 3 outlines the five stages.

Stage one consists of adding a surge suppressor across the flasher. The surge suppressor consists of a .25 mfd. 600 W.V. paper dielectric capacitor (Mallory CB314) in series with a 10 watt 100 ohm resistor (Mallory 1HJ100) and serves the purpose of absorbing the energy when the contact points break. The use of such a surge suppressor will greatly increase the life of the contacts of the flasher. The function of the resistor is to limit the discharge current of the condenser when the points close. Never place a condenser only across contact points, which carry voltages approximating those used for commercial lighting services. If the capacitor is large enough to absorb the spark when the points break the discharge current will be high enough so that metal transfer, welding and sticking may occur when the points "make."

The values specified are for average conditions. Higher line current may call for increasing the size of the capacitor to a maximum of possibly 2.0 mfd. Possible variations in the value of the series resistor would run from 30 ohms to 200 ohms, the latter being suitable for 220 volt circuits where the load is low.

The installation of the surge suppressor should lower the interference level considerably—possibly no further filtering will be required. If further filtering is indicated, proceed with Stage 2 of Fig. 3.

Stage 2 consists of adding a Mallory W7 Noise Filter to the load side of the flasher circuit. The ground indicated would be the junction box if a thermostatic flasher is used on the line; or the metal base of a motor driven flasher if this is used. Try grounding the metal frame of the flasher motor, or the junction box to a nearby water pipe or driven ground rod.

Stage 3. If further filtering seems desirable, add a Mallory W11 filter to the source side of the load, grounding the filter by bolting its mounting lug to the junction box or metal base of the flasher as described in Step 2.

Steps 4 and 5 consist of adding RF chokes (Mallory types RF581 or RF583) in the load leads and source leads respectively.

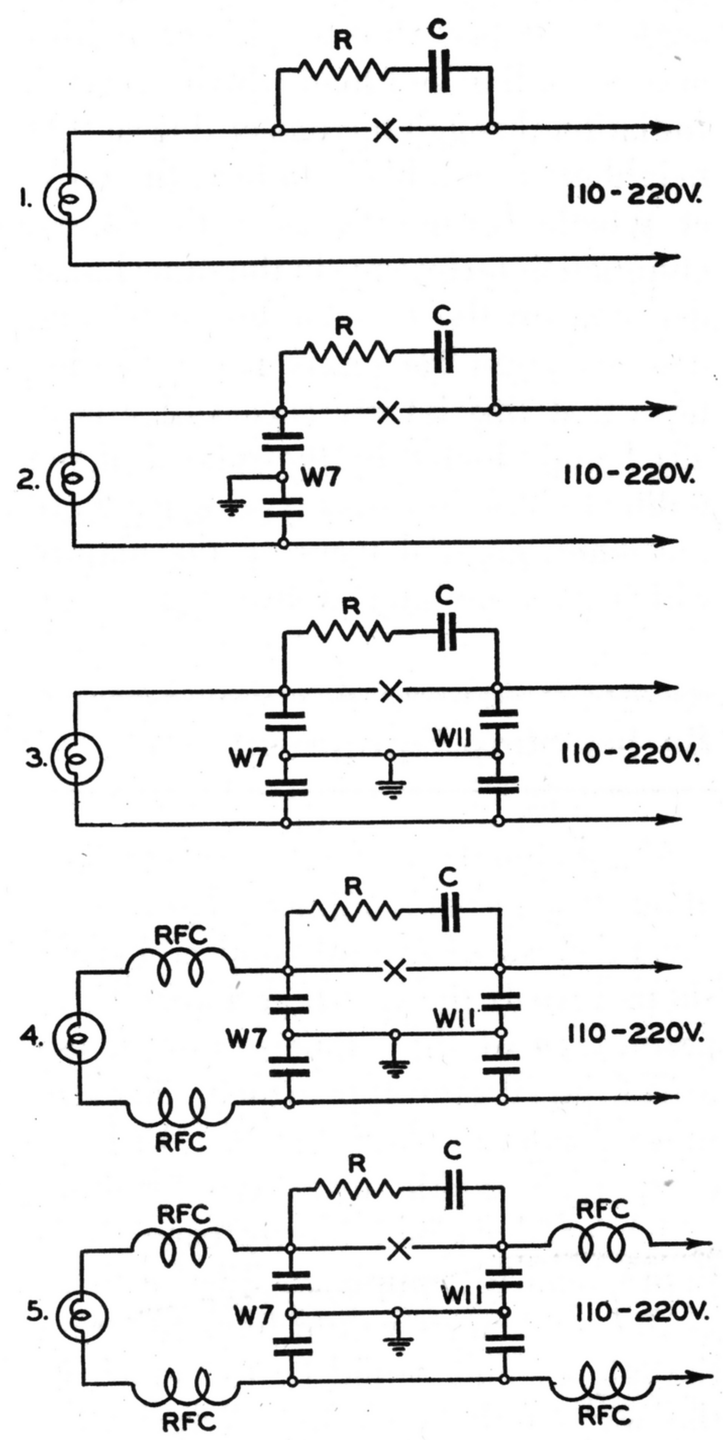

FIG. 3

Multiple Circuit Advertising Signs

The treatment of large multiple circuit advertising signs is similar to that outlined except that steps 3, 4, and 5 are replaced by the installation of a heavy-duty LB filter of appropriate capacity. One W7 filter is required for each load circuit. If a brush-type motor is used to drive the flasher it is possible that a W7 filter may be required across its brushes.

Electric Shavers

Electric shavers, particularly types which make and break the circuit about 100 times per second, have become a serious problem. They can be completely silenced by bringing out a lead from the metal frame and using this as a return lead for a filter such as the X5 or Z8. However this involves operating on the shaver, which is likely to bring objections from the owner. The best remedy seems to be the use of a Mallory Z4 on the end of the cord. The filter type Z4 consists of two chokes with capacities across the line and load which prevents radiation through the power line so that neighbors are unlikely to hear the racket. Whether or not the use of the Z4 will eliminate interference in the same house depends on the type of house wiring, distance from the receiver, etc. We believe that this interference will gradually be eliminated by the refusal of the public to buy the noisy type, since there are many good shavers on the market which cause no interference.

Barber Shop Equipment

Many complaints have been received about the barber's clippers. However a careful check of several hundred barber shops reveals the fact that a very large percentage of the clippers now in use are of the vibrator type which makes no noise whatever. There are a few, however, with small brush-type motors which produce bad interference. It is impractical to completely silence these as the condensers would have to be on the clipper and would be too much in the way of the operator. A line cord filter, such as the Z8, will help.

The really bad offender in the barber and beauty shop is the hair dryer, a small high-speed, brush-type motor which is easily silenced by connecting a shock-proof filter, type W7SP, across the line and grounding it to the dryer frame. The large hair dryer mounted on a pedestal in a beauty shop is easily silenced by a W7SP filter located under the end cover, connected across the line and grounded under one of the motor screws.

Sewing Machines

Electric sewing machines create considerable noise and are quite easily silenced with a twin-capacitor filter, but the filter must be mounted directly on the motor or in some place where it will not be in the way of the operator or the cloth going through the machine. Some motors have a pair of terminal screws providing easy attachment. In other cases connection can most easily be made to the brush-holders. Never mind the rheostat in the pedal. All that is necessary is to connect the filter across the line close up to the motor. The extra small W7A filter is recommended for this application.

Cash Registers

Electric cash registers make just as much noise over a nickel as a five dollar bill but are easy to silence. Remove the plate over the motor and find the line wires. Use a W7SP filter across the line, grounding the bracket to the register frame. In case there is not room inside for the filter, use a Z8A, bolted to the outside of the register. In some installations it may be easier to use the equally effective Z8 by cutting the A.C. cord close to the register, then installing male and female plugs on the cord ends so that the Z8 may be inserted in the circuit. The return circuit can be made by connecting a wire from the binding post on the Z8 to the metal frame of the register, but the preferred method is to bolt the Z8 to the register housing. Motors on registers run for only about one second at a time but where there are many sales they will ruin reception for two or three hundred feet in every direction.

Electric Refrigerators

The motors of modern electric refrigerators almost never interfere with radio reception, however some of the old makes do interfere and can be silenced the same as any other similar motor. Usually a W7 is the correct filter. Sometimes a refrigerator will put out a severe scratching and crackling noise all the time it is running. This is caused by making and breaking contact between the motor frame and the metal chassis of the refrigerator. The motor is mounted either on rubber or springs to absorb vibration, and its frame must be grounded to the external frame and supports, with heavy stranded wire. If this ground becomes loose, much noise will result. Use very flexible wire and leave plenty of slack in it so that motion and vibration of the motor will not break it off. The large refrigerator systems with motor and compressor usually located in the basement are exactly the same as the home type except for size. Mallory LB type filters are recommended for permanently connected motors.

While the following case history deals with an air compressor, rather than a refrigerator, the principle illustrated is the same. An extremely noisy air pump motor at a garage was silenced with the usual filter and the owner brought his radio down. A few days later he complained that he had a worse noise than ever. Investigation showed that the motor was mounted on the air tank from which an iron pipe led through a brick wall and up the ceiling on the other side, then across the ceiling and down the other wall where a rubber hose was connected. On its way the air pipe barely touched a water pipe and vibration from the motor did the rest. Clamping together the water pipe and the air pipe cured the trouble.

Violet Ray Machines

Violet Ray Machines provide serious annoyance, but fortunately they are seldom used. The old type which uses a spark gap can be suppressed but is not valuable enough to make it practical. Any resistor in the high tension leads which will stop the noise radiation will also prevent the machine from working.

The only effective method is to screen the room in which it is used and place a filter across the electric light line and any other wires coming out of it. In most cases this would cost about as much as one of the new type machines which are much better and are also noiseless.

Diathermy Machines

Diathermy machines used by doctors are essentially short wave transmitters. There are two principal types, the self-rectifying oscillator, and the type employing a D.C. power supply feeding an oscillator. Where a rectified power supply is used, the emission is confined almost entirely to one wave length, with only low-intensity side-bands existing from the superimposed ripple of the D.C. power supply. Since diathermy machines operate on ultra-short wavelengths, machines having a D.C. power supply do not create appreciable broadcast interference.

The self-rectifying oscillator type of diathermy machines can be a real menace to the radio reception of a community. In this type of device, the oscillator, usually push-pull, receives its plate supply as unrectified A.C. directly from a power transformer. Consequently, oscillations start and stop twice each alternating current cycle, each tube operating only on the positive portion of its cycle. With the low "C" oscillator circuit used, the result is not only severe modulation at twice the supply frequency, but also severe wobbling of the frequency. The carrier thus generated splatters all over the short wave spectrum, and may even be bad on the entire broadcast band.

It is possible to silence this type by placing it in a totally screened and grounded room, and applying line noise filters to all power supply wires entering the shielded room. However, probably the most economical procedure is to install rectifier tubes and a filter in the machine. This will call for the addition of two 866 rectifier tubes, a filament transformer for heating these tubes, a filter choke of about 4 henries inductance and a filter capacity of about 2 mfd. and of suitable working voltage. This job of altering a diathermy machine can be easily handled by any service man who is also a licensed radio amateur. If you have not had experience with high-voltage power supplies we suggest that you discuss the matter with a radio operator who will be able to give you pointers on insulation requirements, selection of components, safety requirements, etc.

The 115 or 230 volt A.C. supply leads should be by-passed to the power supply chassis with a W11 filter to prevent the A.C. supply line from acting as an antenna. The power supply chassis should also be grounded to a nearby water pipe for reasons of safety. The voltages used in diathermy equipment are high enough to be deadly, so use extreme care when working on any machine.

In addition to the diathermy equipment described above, there is an older type diathermy machine which obtains radio frequency energy from a spark discharge, rather than from an oscillating vacuum tube. These older machines are extremely difficult to silence, the only effective remedy being to enclose the apparatus and the patient in a shielded room and filtering the A.C. wires with a suitable LB noise filter, as described in the paragraph on X-ray machines.

In closing, radiating diathermy machines of all types create severe interference with television reception when the emitted wave falls on one of the television channels. For the present, probably the best remedy is the use of the screened room. It is the feeling of many engineers that in the future diathermy machines will have to operate on a specified channel, and that some frequency fixing method such as crystal-control will be required by law or F.C.C. regulation.

Dental Equipment

Dentists' drills employ small, high-speed, brush-type motors which create violent interference. They are usually easy to silence by a standard filter of the W7 type connected across the line inside the cast-iron pedestal with the bracket grounded to the pedestal. This arrangement will be effective unless some of the pedestal cord (between the point where the filter is connected and the motor) is run on the outside of the metal housing; or if the motor frame is insulated from the main pedestal and cannot be permanently grounded to it. In such cases the filter must be mounted in or on the motor itself. In some cases there is room inside the end cap of the motor for the installation of the filter. There are a number of wires in the bottom of the pedestal. Some go to the foot speed control and others to the switch. Trace the line wires out and make sure you are across the A.C. line. The new X-ray machines used by dentists make no noise.

Hospital X-Ray Machines

X-ray machines used in hospitals and clinics are generally blamed for much more interference than they actually create, and experience shows that the vacuum cleaner used by the doctor's wife may make more interference than all the special electrical equipment used in the doctor's office.

It is true that the older and almost obsolete X-ray machines employed a setup similar to that used in an old time spark-transmitter—high-voltage transformer, spark-gap, etc. However in most cases where this old equipment is still employed the tube is only operated for a few seconds for each patient. The only practical arrangement for silencing these older machines is to screen the entire X-ray room—walls, ceiling, floor, and doors with wire mesh that is connected to a good ground. Then all power supply wires entering the shielded room must be by-passed with suitable filters—the Mallory LB types being excellent for the purpose. Resistors cannot be incorporated in the X-ray transformer leads as these will stop the machine from working.

The more modern types of X-ray machines are not bad interference makers, and should interference be encountered, the addition of a line noise filter will usually be enough to keep the neighbors satisfied.

We report a typical case of supposed X-ray interference. In a city having an ordinance prohibiting the operation of noise-making appliances, many complaints were registered against the X-ray machine of a certain hospital.

On checking it was found that the X-ray machine blamed by everyone was practically noiseless. One of the fifteen heating pads used in the hospital was a bad offender, but the real noise-maker

for the neighborhood was a tree limb nearby that rubbed the electric power line.

Spark Plug Testers

Spark plug and coil testers in garages are not numerous but make up in power what they lack in numbers. The treatment is to place a resistor of about 15,000 ohms (the same thing that is used on spark plugs in cars having radios) in each high tension lead where it comes out of the coil, and install a filter type W7 or better a Z8A in the A.C. line where it enters the machine, grounding the bracket to the frame of the machine.

Thermostat Controlled Devices

Heat pads, electric flat irons and other appliances with thermostatic heat control can generate noises which destroy reception over considerable distance. Heat pads are quite hard to filter, due to the fact that they have no metal frame. A Mallory filter type Z4 will provide considerable attenuation of the interference. The Z4 is a combination inductance-capacity unit which does not require a return lead to the frame of the appliance. If absolute freedom from noise is required, we can only suggest replacing the thermostatically controlled pads with pads of the manual heat control type which are inherently noiseless.

Electric irons may be silenced by using a W7SP shock-proof type filter connected across the cord terminals on the iron and with bracket grounded to the back of the handle where it will be out of the way of the operator and as far from the heat as possible. Other appliances of this kind can be silenced in the same manner. If the appliance is held in the hand use shock-proof filters.

Oil Burners

Most types of oil burning furnaces use an electric igniter which consists of a spark coil with one or more (usually two) electrodes hooked over the edge of the oil trough. When the thermostat closes the circuit each electrode throws a shower of sparks into the oil. In some types the spark is shut off as soon as the oil ignites and in others it remains on until shut off by the thermostat. The electrodes usually should be set so that the spark is about three-eighths of an inch long. Sometimes these electrodes get bent, stretching out the spark as long as an inch and in such cases it is almost impossible to silence the noise. The remedy is to bend the electrodes so that the spark will not be too long. Consult the burner manufacturer's recommendations for the exact adjustment and spacing to be used.

Most oil burners are equipped with noise suppressor resistors which function similarly to the spark plug suppressors used in automobiles. The suppressors for oil furnaces are larger, of course, because of the greater power to be handled. The usual types have a resistance of about 20,000 ohms and a dissipation rating of 25 to 50 watts. If the furnace on which you are working is not equipped with these resistors be sure to secure a set from the manufacturer of the oil burner and install them. For an "orphan" burner, radio resistors of the vitreous enamel type can be substituted. A suitable value for trial would be the Mallory 5HJ20000.

The next step is to filter the power supply leads. The preferred filter for the application is a Mallory LB, with the return lead of the filter grounded to the core of the high-voltage transformer. Connection to the core can be made by loosening one of the bolts clamping the core, fastening the wire under the bolt head and retightening. If for economic reasons a customer cannot be persuaded to use an LB filter, then make the next best installation by bolting the mounting lug of a W11 filter to the transformer core, connecting the filter wires to the primary A.C. leads.

The next step is to bond together the metal parts of the burner and the furnace so that no potential difference can exist between these parts. Use heavy wire for the purpose, and then ground the system to the nearest water pipe, or to a driven ground rod.

Clicking from thermostats can be eliminated by connecting a W7 filter across the thermostat leads at the burner, bolting the mounting lug to the burner frame.

Railroad Crossing Bells

Railroad crossing bells may be prolific noise-makers for an area having a breadth extending about a block from the tracks, and with a length roughly equal to the distance that the tracks are bonded for operation of the signal.

Railroad companies consider these signals to be very important and will not allow anyone to touch them unless their maintenance engineer is present. The most used type of signal mechanism employs a "rocking" armature to make and break six contacts for ringing the bell and flashing lights. It has been found that a .1 mfd. condenser across each contact, plus a W7 across the A.C. line with bracket grounded to the metal frame of the machine reduced the noise about 80%. Apparently the rest of the noise is caused by surge and could probably be eliminated by installing a second W7 filter from each side of the A.C. line to the lamp case.

Now most railroad companies have their own suppression systems and will apply them if complaint is made to their signal engineer located at the nearest division point.

Telephone Equipment

Telephone exchanges sometimes produce several kinds of noise which travel over their system. The older systems use a 30 cycle ringer which will be heard as an extremely low pitched buzz or hum. Others have what are called "differential ringers" which are so arranged that the operator can ring any one of four parties on a line without affecting the other three bells. Differential ringers employ a vibrator with circuit very similar to the usual car radio vibrator. The lengths and weights of the reeds are adjusted so that one will vibrate at 30 cycles per second, the next at 42, the next at 54 and the fourth at 66. The noise can be identified by the frequency.

Dial phone systems have many relays constantly clicking and make a noise like a typewriter or teletype machine combined with the dial tone.

Most exchanges use a 24 or 30 volt storage battery with a Tungar charger across it which it switches on automati-

cally when the voltage goes below a certain point.

Relays, vibrators, etc., cannot be silenced by the usual methods as capacities interfere with the operation of the system. The manufacturer of the apparatus will supply the phone company with special chokes which are very effective, and the local company will put them on if complaint is made.

However a W7 should be put on the Tungar with bracket grounded to the case and it is good practice to put another at the electric meter, across the line and grounded to the metal fuse box, to avoid radiation of clicks through the power line.

Street Cars

Intermittent noises from street cars are usually caused by flattened or worn trolley wheels. Get the number of the car and report it to the company. They will be glad to replace bad trolley wheels.

Noise from generators can travel over trolley wires. In one case of severe noise, the trouble was finally located in a substation, where it was found that the collector rings on the end of a large motor-generator were worn and "out-of-round." This condition produced considerable vertical motion in the brushes, and the accompanying poor contact resulted in severe flashing and arcing. The company repaired the condition immediately when attention was called to the severe radio interference that was being produced.

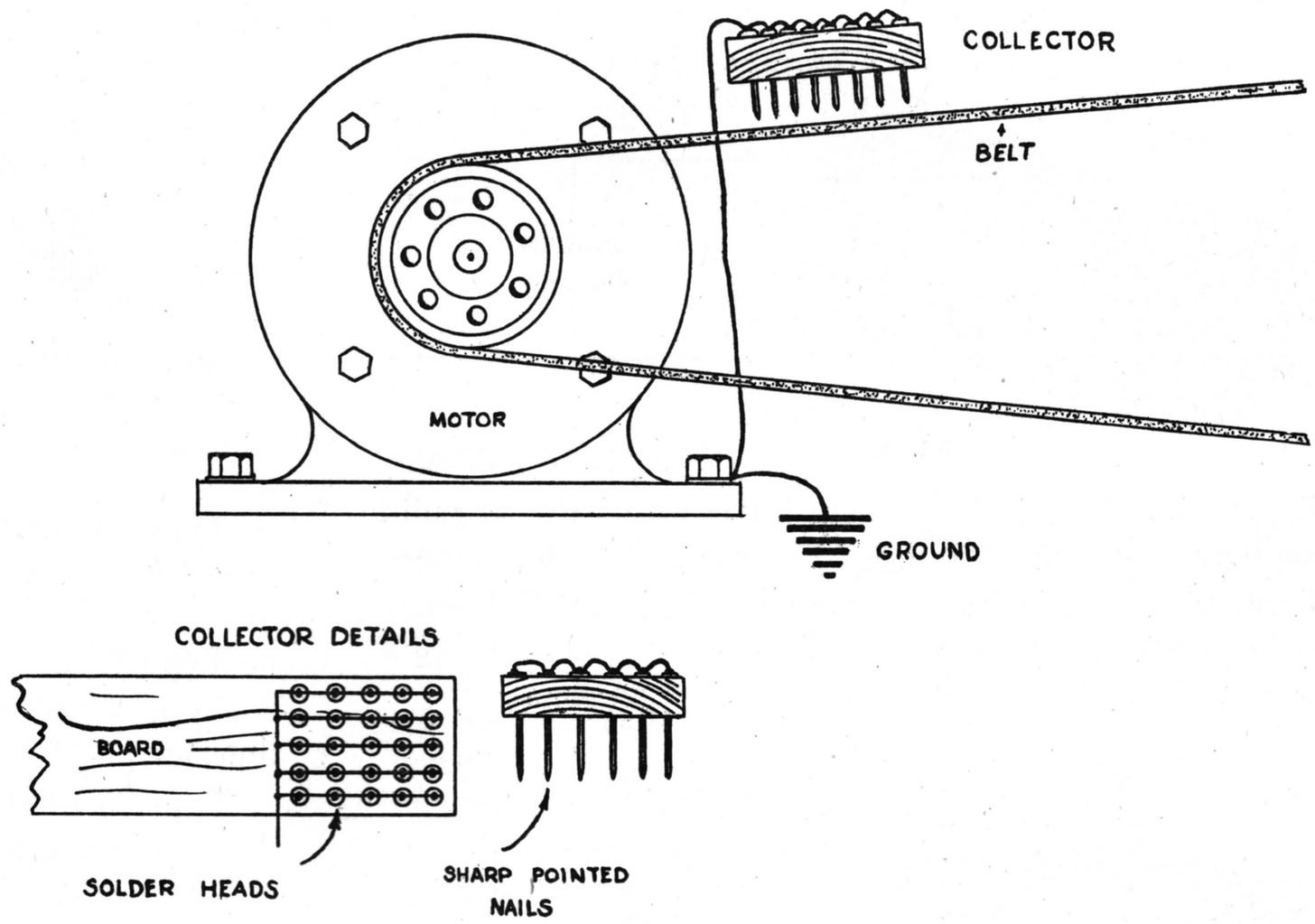

Fig. 4

Belt Static

A high-speed rubber belt can be the source of considerable noise. If a metal belt clamp is used a loud popping may be heard every time the belt clamp passes over a pulley. In one case like this, the belt of a linotype machine spoiled reception in every radio within 200 feet. Connecting the frame of the motor to the frame of the linotype machine corrected the difficulty. Fig. 4 shows a way of draining a static charge from a belt when connecting and grounding the machinery does not eliminate the trouble.

FILTER CLASSIFICATION

All radio noise filters may be grouped into two classifications—standard and shock-proof.

SHOCK-PROOF CONSTRUCTION

The following types of Mallory Noise Filters do not place an appreciable electric charge on the device with which they are used. They are inherently shock-proof.

X1	Z2	Z8	W7SP	LC5
X3	Z4	Z8A	W9SP	LC10
X5	Z6		W11SP	

The above filters may be used on ungrounded appliances, such as electric drink mixers, washing machines, electric drills, etc., where the installation of a ground lead to the frame of the appliance would be inconvenient.

STANDARD TYPES

Noise filters possessing as an element, twin capacitors connected across the line, with return lead to the appliance, cannot be classed as entirely shock-proof. This does not mean that a violent or dangerous shock will be obtained on contact with the appliance on which such filters are used. It does mean that if the frame of the appliance is ungrounded, and the appliance is used in a location where bodily contact may be made with a damp floor or a grounded conductive object such as a water faucet, a tingling sensation may be experienced.

STANDARD TYPES (*Not* Shock-Proof)

W7	W7A	W9
W11	LB10	LB20
LB40		

All tendency toward shock when using standard, non-shock-proof type filters will be eliminated if a wire is connected between the frame of the appliance and a nearby water pipe or grounded electric conduit. The LB series filters are automatically grounded in normal installation by the connecting of the BX or conduit to the cut-out box. Furthermore, it is very unlikely that any kind of a shock will ever be experienced when using the filters listed above on such devices as vacuum cleaners, sewing machines, etc., which are normally used on wooden floored or carpeted rooms.

SPECIFICATIONS

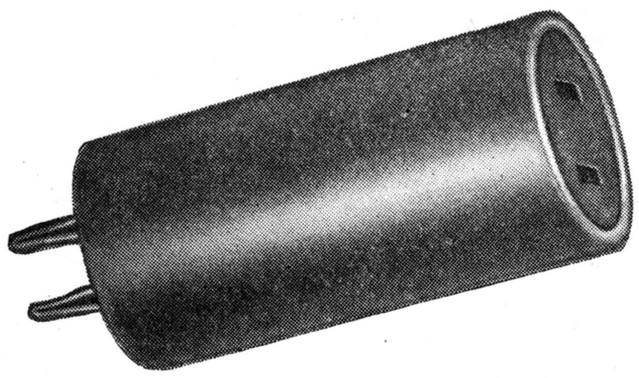

X1, X3

TYPES X1, X3

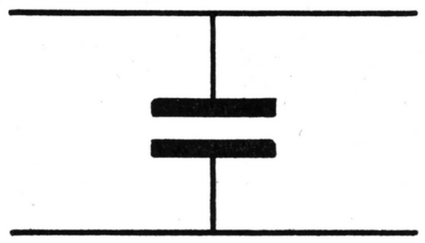

CIRCUIT DIAGRAM

Type X1 is for relatively slight interference. Use at radio or appliance cord plug. Size 1⅜ x 1¾, rated 110 volts, 5 amps.

Type X3 is a capacitor-type filter having greater efficiency than Type X1. Use at radio or appliance cord plug. Size 1⅜ x 2¼, rated 110-220 volts, 5 amps.

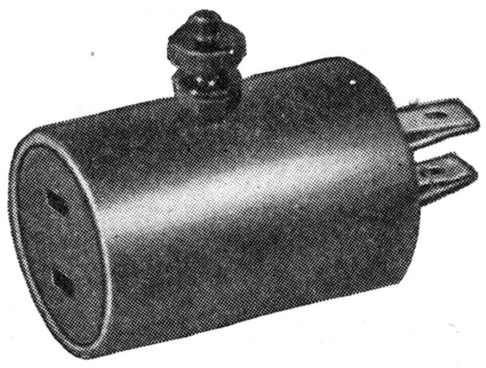

X5

TYPE X5

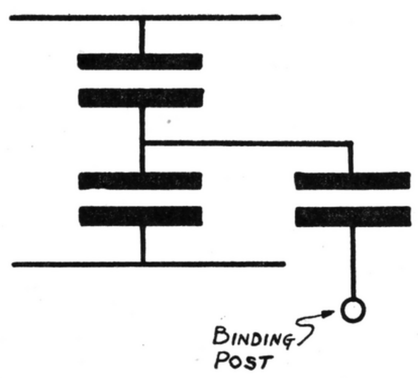

CIRCUIT DIAGRAM

Type X5 is a triple-capacity filter with provision for return lead to appliance. Special safety feature prevents possibility of shock and makes this unit ideal for use with vacuum cleaners, food mixers, etc. Size 1⅜ x 2⅛, rated 110-220 volts, 5 amps., and equipped with binding post for connection to appliance or motor frame. The X5 is the equivalent to, and may be substituted for the W7SP when a plug-in type mounting is desired.

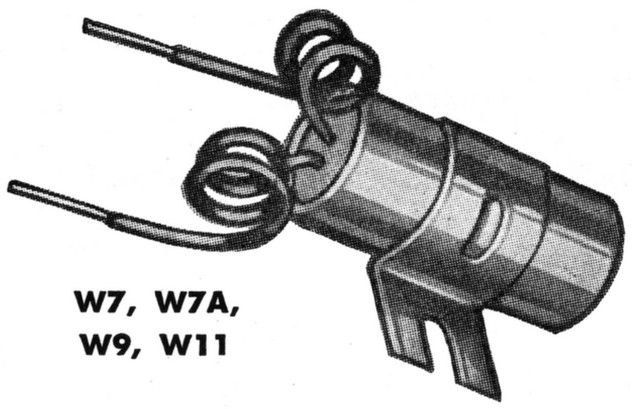

W7, W7A, W9, W11

TYPES W7, W9, W11

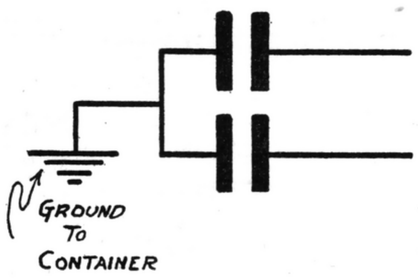

CIRCUIT DIAGRAM

Types W7, W9 and W11 are twin-capacity filters with common connection to container widely used for general by-pass service as described in this chapter. For 115-230 volts A.C. or D.C.

Type W7, for moderate interference. Size 7/8 x 1 15/16.

Type W9 is similar to W7, but for medium interference. Size 1 x 3.

Type W11 is similar to Type W7, but for severe interference. Size 1⅜ x 3.

Type W7A is similar to W7, except smaller physical size. For 110-volt A.C. or D.C. service only. Size 11/16 x 1 11/16. Used on sewing machines and similar applications where space is at premium.

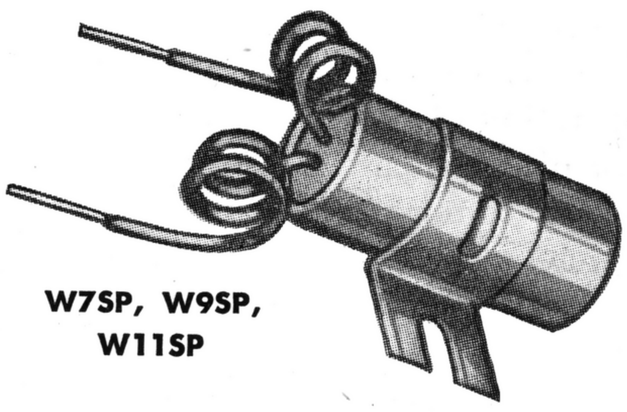

W7SP, W9SP, W11SP

TYPES W7SP, W9SP, W11SP

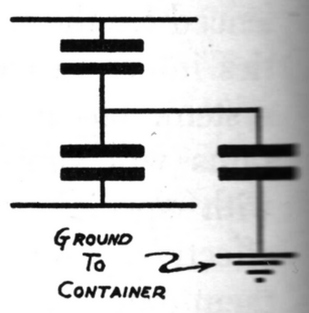

CIRCUIT DIAGRAM

Types W7SP, W9SP, W11SP are triple-capacity shock-proof filters for general by-pass service as described in the previous text. For 115-230 volts A.C. or D.C.

Type W7SP, for moderate interference. Size 7/8 x 1 15/16.

Type W9SP is similar to Type W7SP, except for medium interference. Size 1 x 2⅝.

Type W11SP is similar to Type W7SP, except for severe interference. Size 1⅛ x 3¼.

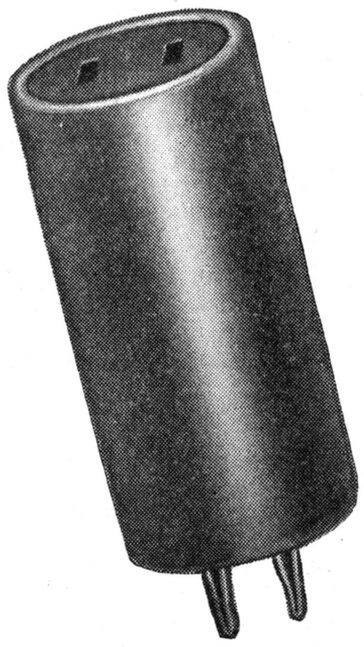

Z2

TYPE Z2

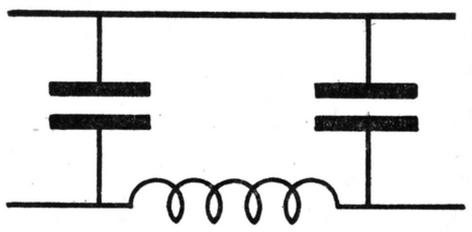

CIRCUIT DIAGRAM

Type Z2 is a capacitor-inductance filter for medium interference. Use with electric razor, radio or appliance cord plugs. Most effective on grounded line systems where reversal of plug will affect operation. Size 1⅜ x 2¾, rated 115-230 volts, 3 amps.

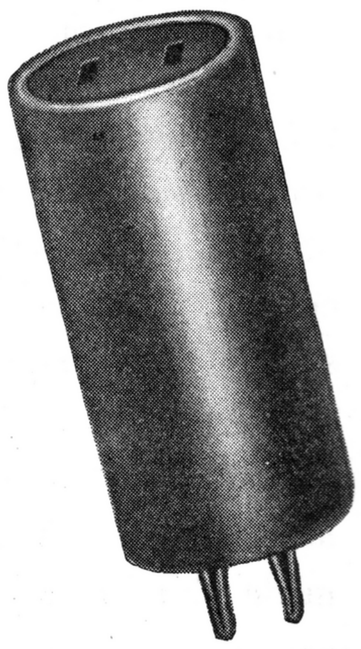

Z4

TYPE Z4

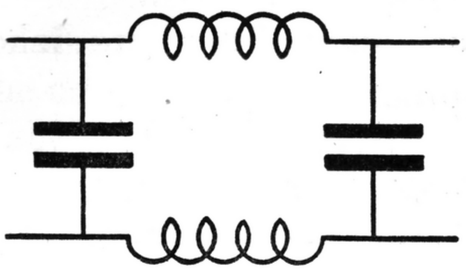

CIRCUIT DIAGRAM

Type Z4 is a dual inductance-capacity filter for severe interference on appliances where a return lead from the filter is inconvenient. Ideal for electric razor, vibrators and household appliances. Use at radio or appliance cord plug. Size 1⅜ x 3, rated 110-220 volts, 3 amps.

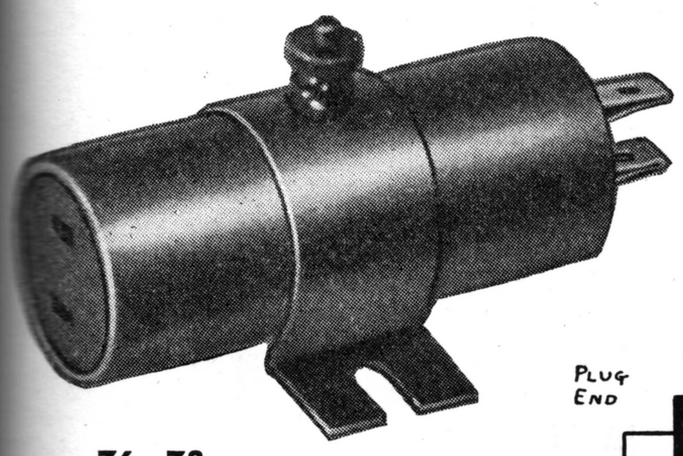

Z6, Z8

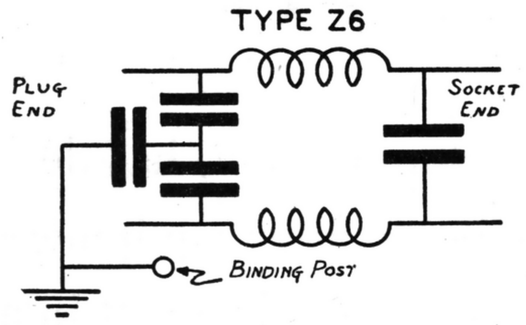

CIRCUIT DIAGRAM

Type Z6 is a dual inductance-capacity filter with provision for return lead to ground. Recommended for suppressing severe interference. Use at radio cord plug. Shock-proof construction. Size 1⅜ x 3⅜, rated 115-230 volts, 3 amps., A.C. or D.C.

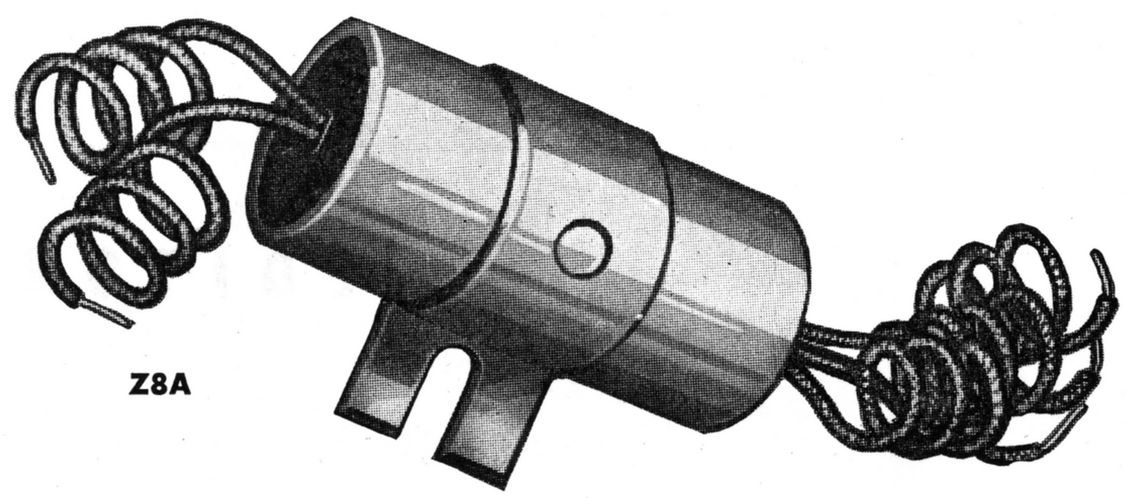

Z8A

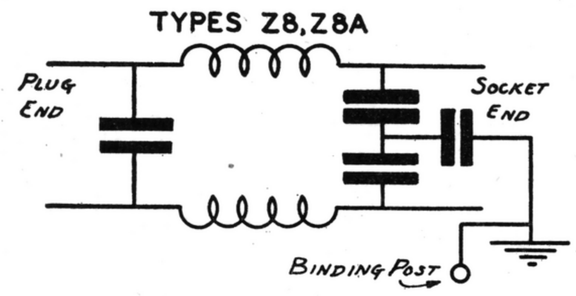

CIRCUIT DIAGRAM

Type Z8 is same as Z6 but with provision for return wire connection to motor or appliance frame rather than ground. An efficient filter equivalent to box type within 3 amp. rating. Shock-proof construction. Type Z8A is same as Z8 except provided with lead connections. Both are designed for mounting directly on appliance. Ideal for use with fluorescent lamps. Shock-proof construction.

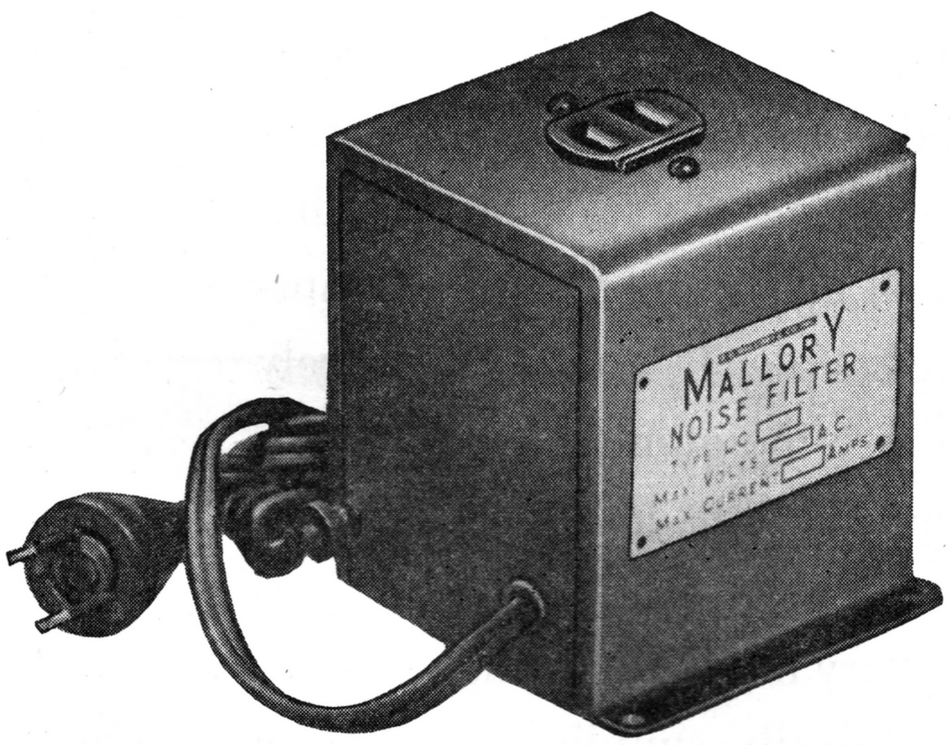

LC5, LC10

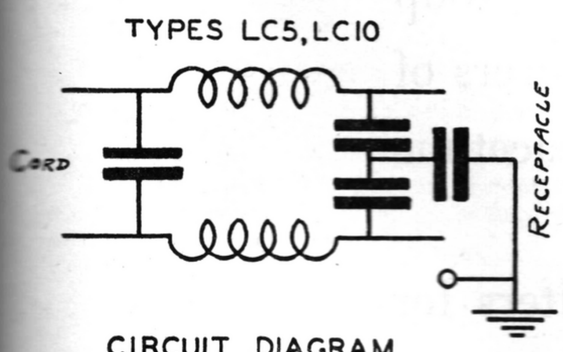

CIRCUIT DIAGRAM

Type LC5 is an inductance-capacity filter for extremely severe interference. Has provision for return lead to frame of motor or appliance. Rated 115-230 volts, 5 amps. A.C. or D.C., supplied in rectangular housing with mounting flanges. Size 2⅞ x 3½ high. Shock-proof construction. Type LC10 is identical in size to Type LC5, but is rated at 115-230 volts, 10 amps. A.C. or D.C. Shock-proof construction.

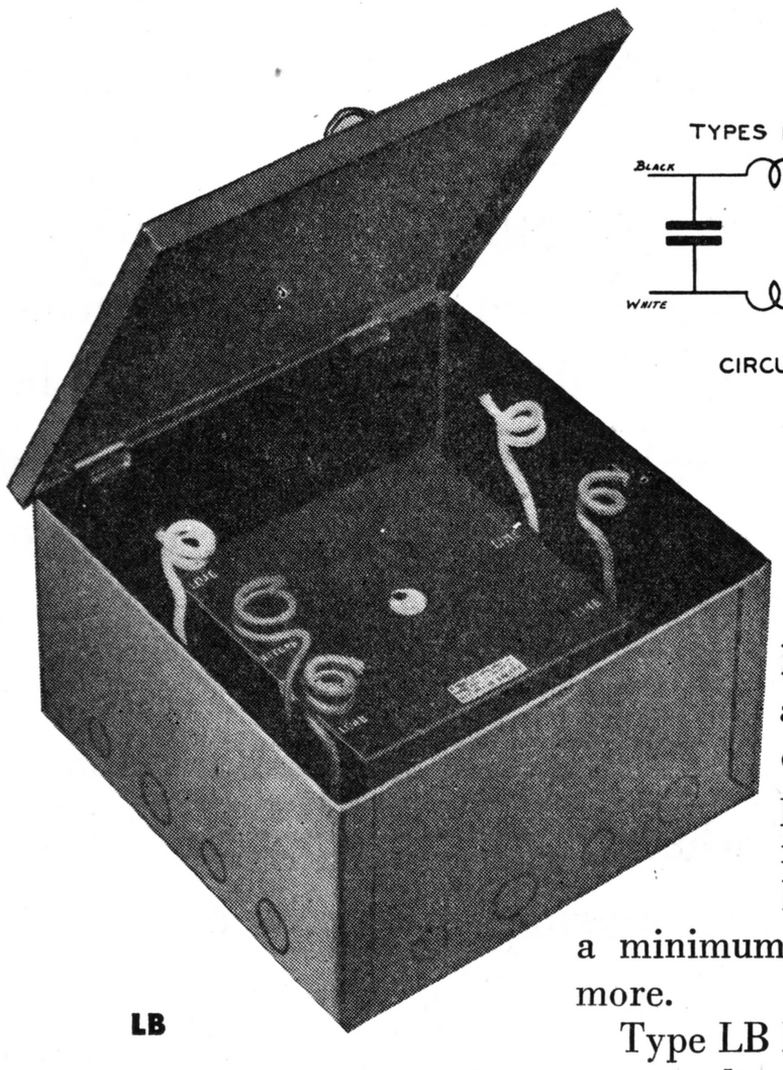

LB

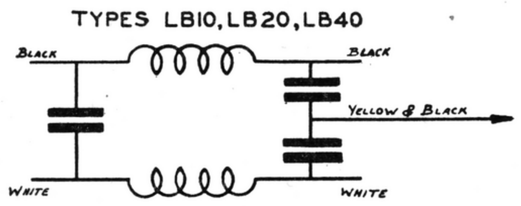

CIRCUIT DIAGRAM

Mallory Type LB Noise Filters are for use with equipment that is permanently connected to the power line or which draws a minimum of 10 amperes or more.

Type LB Filters are furnished as complete units including capacity and inductance and supplied in standard type metal cut-out boxes. These units are available in various current ratings as listed below.

Installation is made by cutting the power line as close as practical to the offending device and inserting the correct Mallory Noise Filter in series with the line at this point. Connections are made by splicing inside the cut-out box.

TYPE	RATING	SIZE
LB10	220V 10 amps	6 x 6 x 4
LB20	220V 20 amps	10 x 10 x 6
LB40	220V 40 amps	12 x 10 x 6

EDITOR'S NOTE

Section 10, Practical Radio Noise Suppression, has dealt exclusively with the civilian application of noise filter equipment. A far more important use at the present time is its employment in all types of military services, such as aircraft, combat or supply vehicles, mobile service machinery, and power sources.

Military noise filter equipment differs in that it is specifically designed and constructed for the individual application. Electrical characteristics roughly approximate a similar civilian type except for wider frequency coverage, and the mechanical structure is more rugged for the extremely severe operating conditions.

Military noise filter installations serve a twofold purpose, first that of eliminating "man-made" interference in combat or supply forces, so that radio communication and warning services can operate at maximum efficiency; and second, preventing any widespread radiation of RF energy which could be picked up by an enemy and translated into military intelligence. For example, it would be entirely possible for an alert interceptor to establish the number and direction of a mobile enemy force not equipped with noise suppression equipment.

It should also be noted that all military noise-producing vehicles, whether radio-equipped or not, are generally supplied with noise filters, since one unfiltered unit could destroy reception for its group associates. This principle could well be adopted by manufacturers of products capable of generating interference, in the return to peacetime civilian production.

The experience gained in the manufacture of noise filters for war services will undoubtedly prove of real influence in a widened scope of civilian activity after the war.

• *Section* 11

THE MYE TECHNICAL MANUAL

Vacuum Tube Voltmeters

P. R. MALLORY & CO., Inc.
MALLORY

The Vacuum Tube Voltmeter and its Use in Radio Servicing

A vacuum tube voltmeter is one of the most useful and important pieces of measuring equipment on a service bench or in a laboratory. With it, one may measure voltages or currents without disturbing the operation of the circuits being investigated.

Essentially, a vacuum tube voltmeter is a device in which an input voltage causes a change in plate current which can be calibrated in terms of the input voltage. Considerable literature has been published and there are many forms of vacuum tube voltmeters. Some measure D.C. voltages only; others A.C. and some both; some measure in terms of RMS voltages, others measure peak values only; some utilize a diode condenser rectifier circuit and a D.C. amplifier; others utilize grid or plate circuit rectification. The idling current may be balanced out so that only the plate current change will be indicated by the meter, thereby making the entire scale useful to indicate the signal. This may be accomplished by bridge circuit arrangements, by bucking arrangements, by push-pull arrangements, or by directly balancing the unknown voltage against a measured known voltage, as in the so-called slide back type. Some designs incorporate means for automatically compensating for line voltage variations and in others, this compensation is manually effected by suitable zero adjusting controls. As a means toward a better understanding of the usefulness and limitations of various types commonly used by servicemen and amateurs, some of the more popular designs will be discussed.

Slide Back Type Vacuum Tube Voltmeter

One of the best known is the familiar Slide Back Type of Vacuum Tube Voltmeter, in which an unknown voltage is impressed on the grid of a vacuum tube thereby causing a plate current change. A known voltage is then used to bias the tube back to the original static plate current reading; the known voltage being read directly on a meter. This type instrument reads the peak value of the impressed A.C. voltage although the scale may be calibrated in terms of RMS values. This instrument is very useful in measuring static voltages, however, in service work where A.V.C. voltages, etc., are constantly changing, considerable manipulation of the bucking control in order to follow the varying voltage, is required by the operator. Fig. 1 shows the basic circuit of such an instrument.

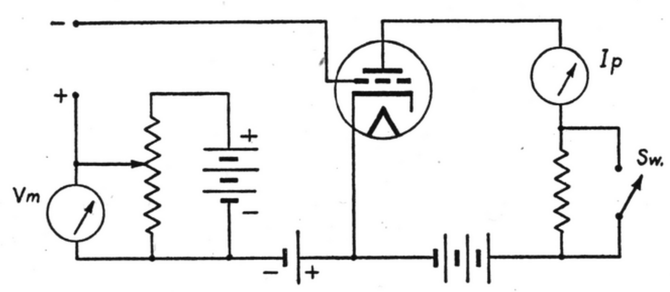

FIG. 1

The tube is biased initially by battery "A" to some reference point close to cut-off, this value being indicated on the plate circuit micro-ammeter. The unknown voltage is then applied and the known voltage as measured directly by the voltmeter (Vm) increased by R, until the plate current of the tube is again at the initial reference point. It is usually desirable to cause the voltage being measured to decrease the plate current or make the grid more negative until bucked out, so as to avoid excess currents through the sensitive plate current micro-ammeter.

Triplett Model 1252 Vacuum Tube Voltmeter

A practical instrument of this type developed primarily for its accuracy and minimum interference with the circuit being measured is illustrated in Figures 2 and 3.

This instrument uses an ingenious bridge type circuit in which a second tube, used as a fourth arm of a bridge along with a sensitive Galvanometer, acts to balance out the current in the circuit, thereby making a calibration adjustment each time a read-

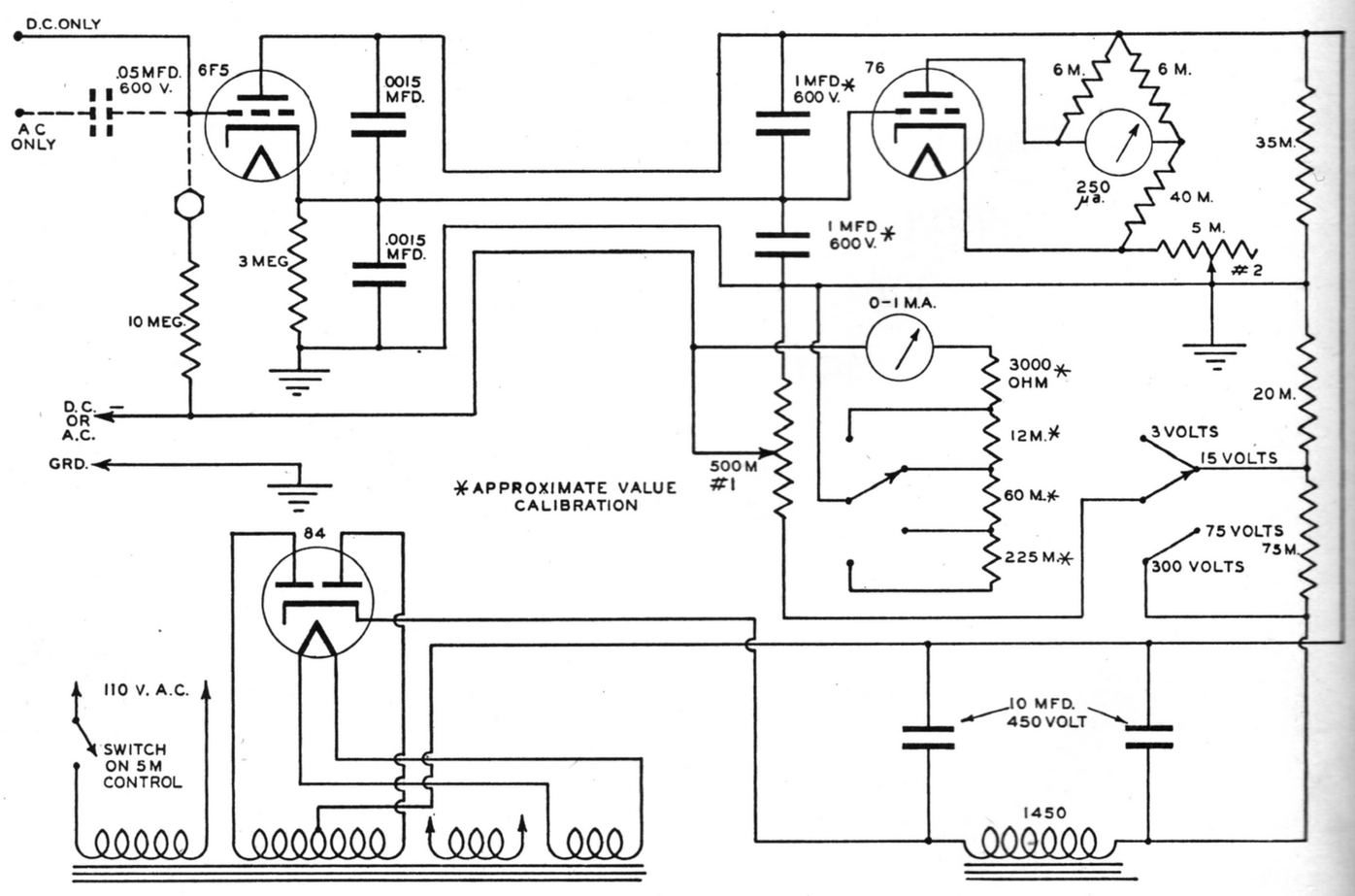

FIG. 2

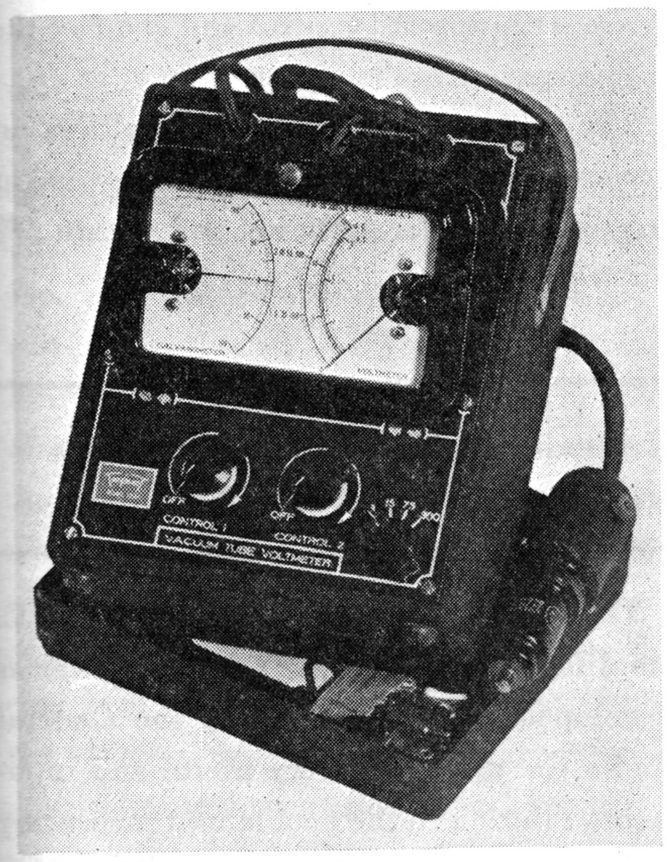

FIG. 3

ing is taken. In this way, the input voltage of the first tube is under definite control, regardless of what the characteristics may be of the particular tube used in that circuit.

The type 76 tube forms the 4th arm of the bridge along with two 6,000 ohm and one 40,000 ohm resistor for the other arms. The resistance of the 76 tube is controlled by the 5,000 ohm variable rheostat (Control No. 2) which in this way sets the bridge in balance and thus eliminates tube calibration. When a signal is applied to the input grid of the 6F5 tube, it goes positive upsetting the normal plate and cathode current of this tube, and in turn upsetting the balance of the bridge. A bucking out voltage can be applied to the plate cathode of the 6F5 tube by Control No. 1. When this equals the input signal voltage, the cathode current of the 6F5 will be normal and the bridge again will be in balance. Since the bucking out voltage is equal to the input voltage in this circuit when the bridge is balanced, the D.C. voltmeter placed in this circuit will give a measurement of the input voltage. This bridge type arrangement permits adjustment to a very fine degree by the Galvanometer method.

Using this arrangement, an input voltage divider network is unnecessary for covering the various ranges and its attendant frequency discrimination is eliminated.

For D.C. the grid bias return from the instrument itself is through the circuit being measured. For A.C. the grid bias is brought up from the tester through a 10 meg. resistor, which terminates at the side of the tube housing at the end of the cable. A small device consisting of a fixed cord, with a flexible lead, is connected to this tip jack as well as the grid cap on the tube, the condenser then being in series with the grid thus serving to block out any D.C. that may be on the line under test.

The capacity of this condenser is .05 Mfd. and is added vectorially to the 10 meg. non-inductive resistance to determine the input impedance at any desired frequency. An additional correction consists of a 6 micro-microfarad capacity in parallel with the 10 meg. resistance—the former being the grid to cathode tube capacity of the 6F5.

In placing this instrument in service, control No. 1 is set to zero so as to pick up no bucking voltage and after a suitable warm up period, the bridge balanced by adjusting the 5,000 ohm control No. 2 so that the Galvanometer is at zero or center scale when the input terminals are shorted. Then the selector switch is set to the range of the voltage being measured and the leads or probe connected to the unknown voltage. This will cause the Galvanometer to be deflected from its zero position. The bucking control or No. 1 is then adjusted so as to return the Galvanometer to its original zero position. The voltmeter then directly indicates the value of the voltage picked up by the bucking control or the value of the signal being measured.

This instrument is provided with four A.C. ranges, 0-3-15-75-300 volts peak and with identical ranges on D.C. Obviously, the range of an instrument of this type is limited only by the value of bucking voltage available.

Clough Brengle Model 88-A Vacuum Tube Voltmeter

This instrument, a schematic of which is shown in Fig. 4, provides a means of measuring directly on one range (chosen to operate on the square law portion of the tube) RMS values of either a sine or distorted A.C. wave, and on other ranges the peak values of A.C. waves. The RMS range is designed for a full scale reading of 1.2 volts, adequate deflection being provided down to .1 volt, so that signal generator outputs can generally be measured directly on this scale.

Theory of RMS Measurements

Most triode tubes approximately obey the square law over a portion of their plate current, grid voltage characteristic. In other words, the plate current approximately varies as the square of the change of the applied grid voltage. When rectification occurs over this portion of the tube characteristic, the rectified plate current is directly proportional to the RMS value of the A.C. wave applied to the grid regardless of its wave

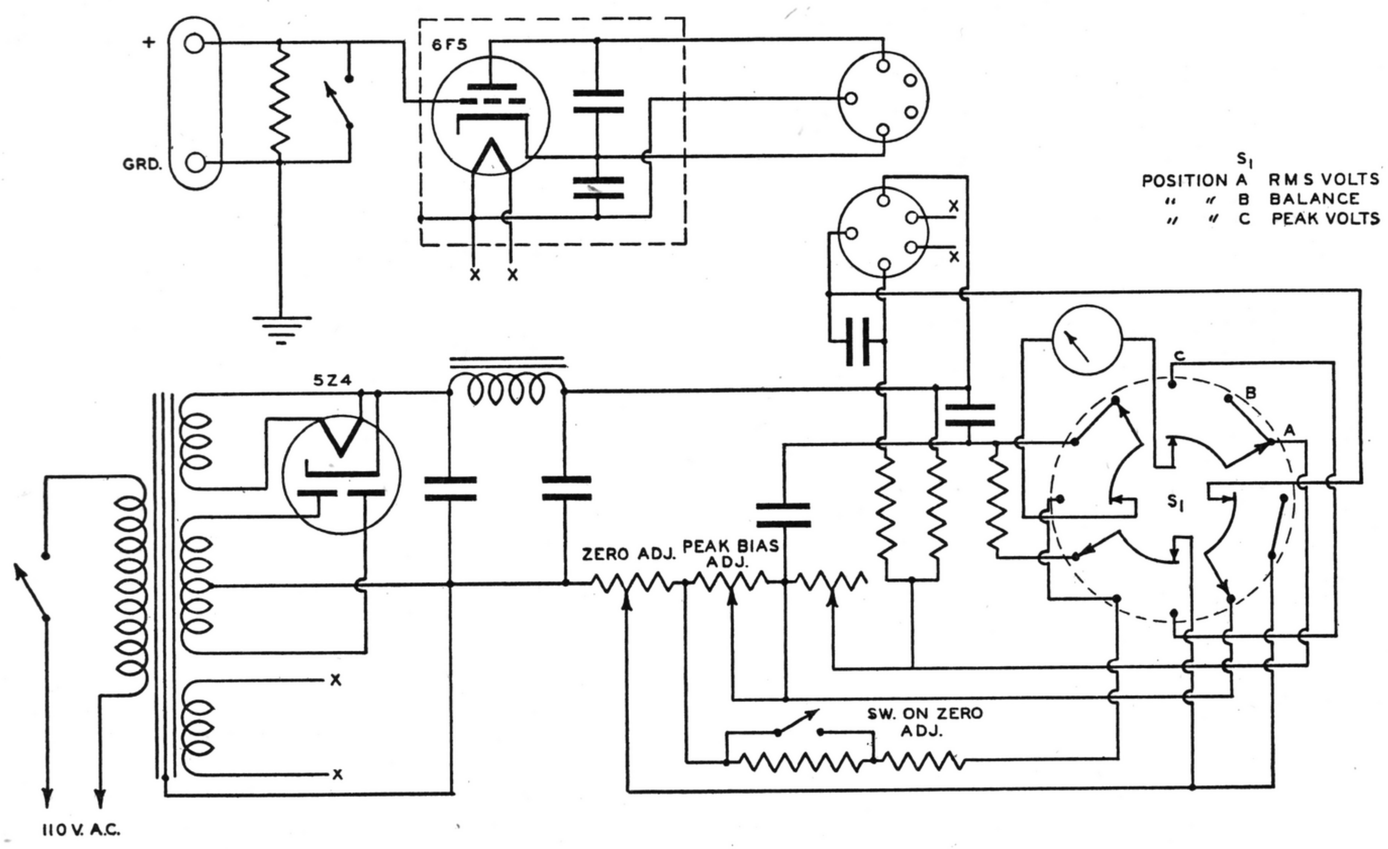

FIG. 4

shape. For a given tube, the square law portion must be carefully determined, and the sensitivity of the plate current meter so chosen that operation could be only over the square law characteristics. This limits an accurate design to a single RMS range unless an extremely sensitive plate current meter is used. Since the model 88-A is a portable instrument, the meter sensitivity is chosen to be within the requirements of ruggedness and reliability.

Peak Voltage Measurements

In measuring peak voltages, the familiar slide back arrangement is used. The plate circuit meter described above in making RMS measurements is used by means of suitable switching to read both the bucking voltage necessary to exactly balance the peak voltage of the unknown, and also to act as the plate circuit Galvanometer during this adjustment.

Operation of the Clough Brengle Model 88-A Vacuum Tube Voltmeter

Turning the switch S, shown in Fig. 4, to RMS volts position, connects the circuit as shown in a more simplified manner in Fig. 5 for making RMS measurements. After allowing a few minutes for warm-up, the meter should be set to zero on the scale. First short the grid circuit with the push button provided so as to eliminate any error due to stray pickup and then turn the zero adjustment control until the meter reads zero. It will be noted that turning the "Peak Bias" control also has an effect on this zero adjustment, and that it may be used as a vernier to the main

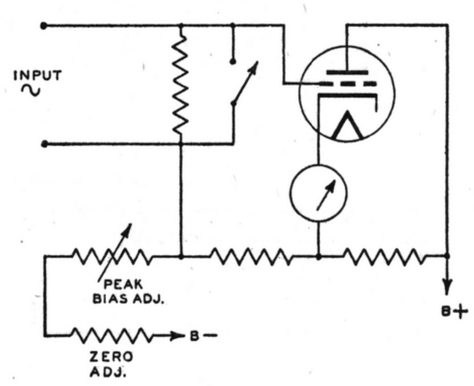

Fig. 5

zero adjustment control. However, if it is not turned during a measurement it has no effect on the accuracy of the RMS scale readings.

The instrument is now adjusted to read RMS voltages up to 1.2 volts directly on the scale provided.

Turning the Switch S shown in Fig. 4 to the Balance position, connects the circuit as shown in a simplified form in Fig. 6 for adjusting the plate current on the 6F5 tube to cut-off.

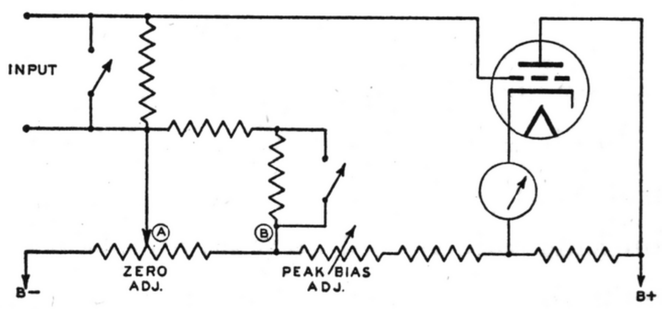

Fig. 6

This is done by first turning the Zero adjustment control to the extreme left against the stop so that no bucking voltage is picked up between A and B. Then adjust the Peak Bias Control until the plate current meter just reads zero.

Next the zero adjustment control is turned to the extreme right so as to pick up the maximum bucking voltage between A and B so that the tube is biased considerably beyond cut-off. Then the unknown voltage is applied and the zero adjust control set so that the plate current is just zero, corresponding to the point at which the bucking voltage picked up between points A and B equals the peak value of the unknown voltage.

When this point has been determined, the Switch S is turned to the Peak Volts position connecting the circuit so that the

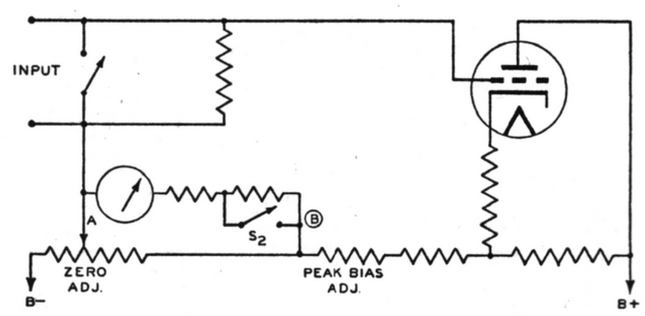

Fig. 7

meter is used as a voltmeter to directly measure the voltage between points A and B as shown in Fig. 7.

The instrument is provided with a range switch S_2 which is actuated in adjusting the "Zero Adjustment" control and changes the meter range from 10 to 100 volts.

The design of this instrument allows an accuracy of within 2% of full scale value at frequencies under 4,000 kc. and within 5% for frequencies up to 30 megacycles.

General Radio Vacuum Tube Voltmeter Model 726-A

The diode condenser rectifier and D.C. amplifier type of vacuum tube voltmeter as developed and introduced by the General Radio Co. presents a very useful and interesting solution to the problem of measuring A.C. voltages or currents over a very wide frequency range, 20 cycles to 100 megacycles and better.

The voltmeter consists of a familiar combination—a diode condenser rectifier circuit and a D.C. Amplifier. A condenser becomes charged by the rectifier to a voltage very closely equal to the peak value of the applied A.C. and the D.C. amplifier and a milliammeter provide a means of measuring the voltage appearing across the condenser.

The Rectifier Circuit

The Rectifier Circuit is shown on the left hand side of Fig. 8.

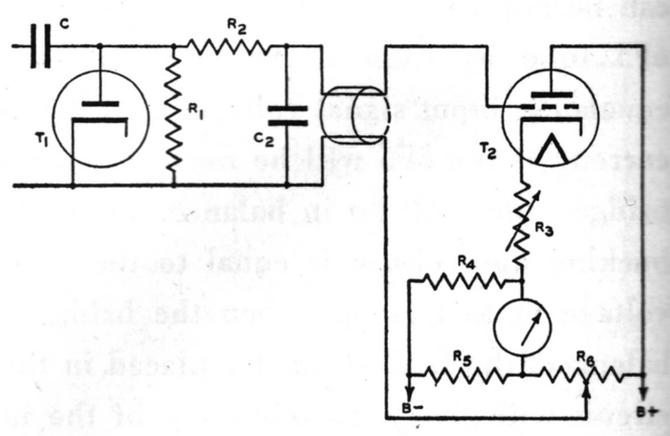

Fig. 8

The resistances R_1 and R_2 are of high value so that they do not affect the operation of the diode T_1 and the Condenser C in the input loop of the circuit. If C has sufficient capacitance so that no A.C. appears across it, its charge will build up until the voltage is equal to the peak value of the applied A.C., after which time the anode will never be positive with respect to the

cathode and no further rectified current will flow. In other words, when equilibrium is reached, the rectifier will approach the conducting condition only at the time of the positive peak of the applied A.C. voltage. For the rest of the cycle, the plate will be negative with respect to the Cathode. The voltage across the diode thus consists of a negatively biasing D.C. in series with the applied A.C. voltage, and it will be seen that the average plate potential is negative with respect to the cathode.

The purpose of R_1 is to permit the discharge of condensers C and C_2 when the input voltage is reduced. This resistor is placed across the rectifier rather than across C_2, so that no D.C. will flow through R_2 except when the input voltage is varied and new equilibrium conditions must be established. No correction need be made, consequently, for the voltage drop across this resistor, and the entire D.C. voltage is applied to the amplifier tube. This feature contributes considerably to the stability of the instrument and the permanence of its calibration.

The direct component of the voltage across the diode is equal to the peak value of the applied A.C. voltage. The resistance R_2 and Condenser C_2 remove the A.C. component so that only the D.C. component is applied to the D.C. amplifier. Elaborate filtering is unnecessary due to the extreme linearity of the amplifier resulting from degeneration. Unless the A.C. voltage is sufficient to swing the plate current to cut-off, only a negligible amount of rectification can take place. The simple filtering arrangement shown is therefore entirely adequate.

The Amplifier Circuit

The D.C. Amplifier Circuit is shown in the right hand section of Fig. 8. The resistor in the cathode lead is particularly important. This provides degenerative coupling between the input and output circuits and not only accomplishes in the D.C. case improvements analogous to those resulting from the use of degeneration in A.C. amplification, but also has other important results. The important improvements resulting from the use of degeneration in the present case will be outlined.

(a) The meter indication within very close limits is made proportional to the D.C. voltage introduced into the grid circuit.

(b) The sensitivity is made practically independent of the tube constants.

(c) The grid circuit is rendered capable of handling directly, voltages hundreds of times greater than the normal cut-off bias. Hence no voltage dividing network is necessary.

(d) The sensitivity can be changed for the various desired voltage ranges merely by changing the value of the cathode resistor and the value of the grid bias voltage.

Fig. 9 is a simplified diagram to illustrate the degenerative effect of the cathode resistor.

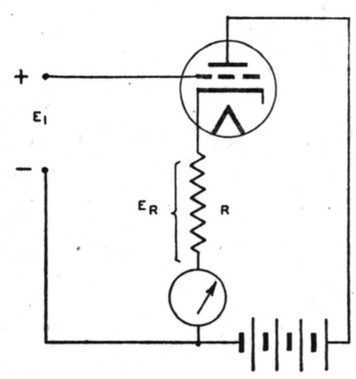

FIG. 9

If a voltage E_1 is introduced into the grid circuit, the plate current will tend to increase, causing a voltage drop E_R across the cathode resistor R in opposition to the introduced voltage. The net change in grid voltage is the difference between the two. If the cathode resistor is large in value, only a very slight increase in plate current is required to develop a voltage equal to the introduced voltage. The net grid voltage, therefore, can change only slightly and E_R must always be very nearly equal to E_1. The larger the value of the cathode resistor, the smaller must be the increment in plate current and the more nearly equal must E_R be to the introduced voltage E_1. Whenever the cathode resistor is large enough to bring about this condition, the change in plate current, indicated on the meter, will be directly proportional to the introduced voltage and the tube constants of very little importance.

The same simple consideration shows that the sensitivity of the arrangement, considered as a D.C. Voltmeter, can be changed by varying the cathode resistor. If this resistor is increased in value 10 times, only one tenth of the change in plate current will be required to develop a given opposing voltage. If the plate milliammeter has a certain full scale sensitivity, consequently, 10 times the voltage must be introduced into the grid circuit to cause full scale deflection. For sufficiently high values of the cathode resistor, the full scale voltage is directly proportional to the cathode resistance and depends only on this quantity and on the sensitivity of the milliammeter.

The polarity of the D.C. voltage developed by the rectifier circuit and applied to the D.C. amplifier is such that the grid of the amplifier T_2 (Fig. 8) is made negative with respect to the cathode. This is important in preventing damage to the meter due to overload. The plate current decreases when voltage is applied and can only be reduced to zero. The maximum possible change in plate current does not greatly exceed the milliammeter full scale current, so that no serious overload is possible, regardless of the input voltage applied. The milliammeter of course is connected in the circuit backwards, so that a decrease in plate current is indicated as a positive deflection.

The three resistances R_4 and R_5 and R_6 shown in Fig. 8 but not in Fig. 9 make it possible to balance out the initial plate current and to furnish the desired grid bias. The resistance R_3 and the position of the tap on the resistance R_3 are changed simultaneously when the range of the instrument is changed.

Power Absorption

The power which must be drawn from the voltage source can readily be calculated from the known voltages appearing across the resistors R_1 and R_2. In the filter circuit R_2C_2 just considered, the entire A.C. voltage appears across R_2. The same voltage appears across R_1, as appears across the Rectifier, namely the full A.C. voltage in series with a D.C. equal to its peak value. The A.C. fraction of the power loss is the same which would result if R_1 and R_2 in parallel were placed directly across the voltage source. In addition, sufficient power must be drawn to supply the D.C. loss in R_1, corresponding to the peak value of the A.C. voltage. Short pulses of current flow

through the rectifier to supply this power, so for this component of loss the voltage source is loaded relatively heavily during a very small part of the cycle and not at all during the rest of the cycle. Due to the shortness and intensity of the pulses through the rectifier any resistance in the input branch seriously reduces the flow of rectifier current and lowers the meter reading correspondingly. It is this reduction in meter reading due to the impedance of the voltage source, rather than the total power consumption, that is important in most applications. This effect can be made negligible only by reducing the D.C. power absorbed to the lowest possible value. In the type 721-A vacuum tube voltmeter the resistor R_1 (Fig. 8) has the value 50 megohms. About 4 megohms in series with the applied voltage however, is sufficient to halve the voltmeter reading. From the voltage reduction standpoint the input resistance, therefore, can be said to be 4 megohms. The power absorption, however, is determined mainly by A.C. losses in R_2 (10 megohms) and from this standpoint the input resistance is appreciably greater—about 6 megohms. At high frequencies, other factors become important, so that the simple analysis here given is no longer applicable. These factors are discussed below.

Operation at High Frequencies

To achieve satisfactory operation at high frequencies, the elements which make up the rectifier circuit are made as small as possible and are mounted in a separate housing at the end of a flexible cord. Probe terminals are provided so that the measuring circuit may be placed close to the voltage source. A 955 acorn tube is used as the diode rectifier. The probe terminals can be removed to reduce still further the inductance of the input loop.

As a result of these details of construction, the resonant frequency of the input loop is about 380 megacycles and 500 megacycles with the probe terminals removed. The frequency error in the readings is only 3% at 100 megacycles. The power consumed from the source at high frequencies is no longer determined by the values of R_1 and R_2 but by the total stray capacitance across the input and the losses in this capacitance. The total capacitance is about 6 micro-microfarads and the power factor about 2.5%, the losses occurring principally in the tube envelope and socket and in the material surrounding R_1 and R_2. It is interesting that at high frequencies the input impedance is not affected by turning on or off the heater of the diode T_1.

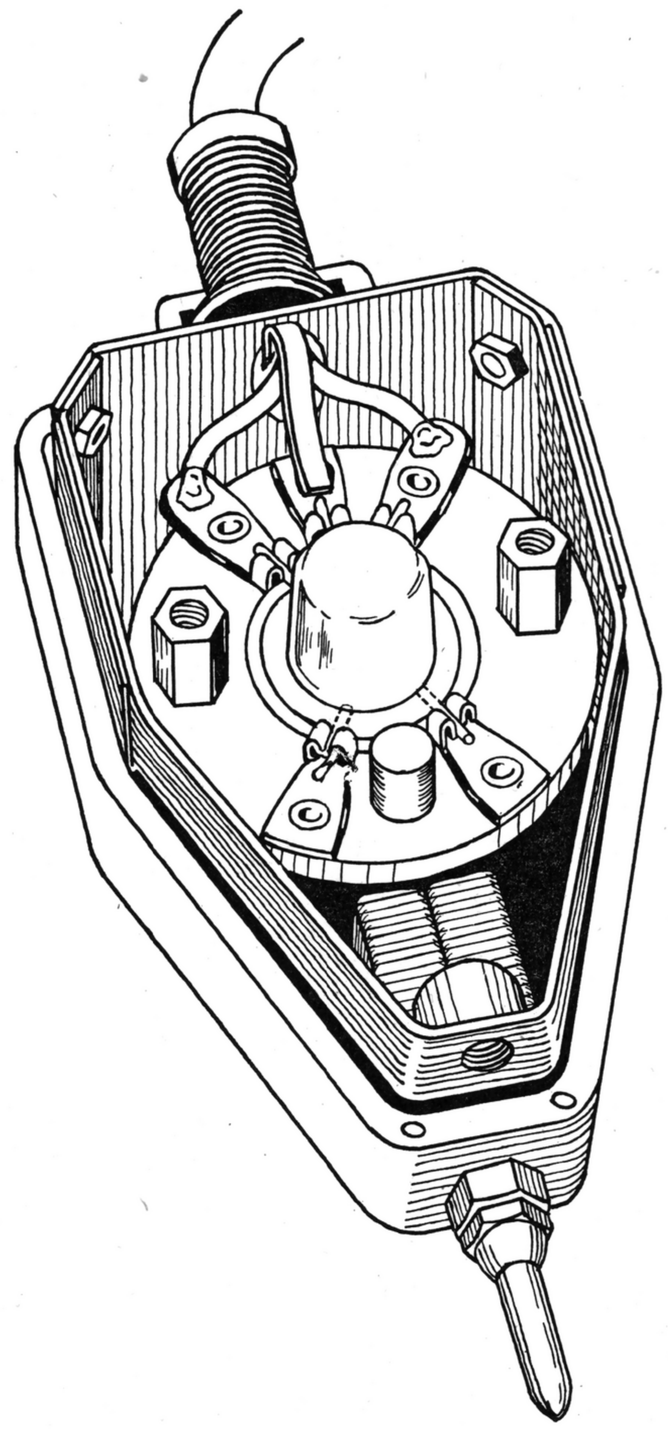

Fig. 10

Fig. 10 shows the rectifier, mounted in the probe, with cover removed. The extremely short leads and low shunt capacitance obtained are responsible for the excellent frequency characteristics.

Other Advantages

By including a power supply voltage regulator, the meter indication has been made as stable as that of a D.C. instrument. Fluctuations in line voltage have no effect nor do long period drifts which would otherwise change the reading through changes in filament temperatures.

Although the diode rectifier is mounted in a probe, the probe can be mounted inside the cabinet and if desired, for low frequency measurements, the voltage source under measurement can be connected directly to terminals on the panel. The low terminal on the panel is not connected to the panel, but is isolated by a blocking condenser. This is convenient in measuring voltages across plate tank circuits, for instance, where the voltmeter cannot be grounded without damage.

The meter reads the RMS value of a sine voltage directly. As has been shown however, it is the peak value of the waveform which determines the reading. The instrument is very useful in determining the peak values of complex wave forms, these values being obtained by multiplying the reading by 1.414.

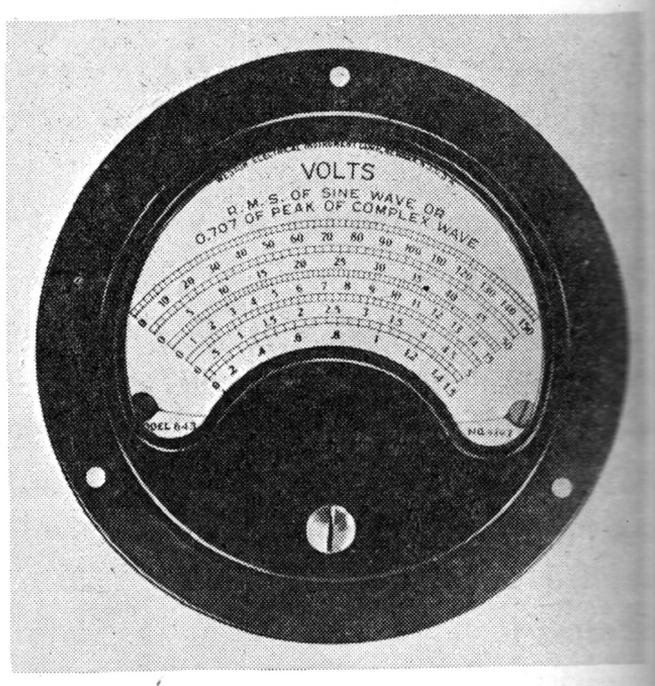

Fig. 11

Fig. 11 shows meter and its scale calibrations. Five ranges are provided, 0-1.5-5-15-50-150 volts. It will be seen that the scales are nearly linear.

Fig. 12

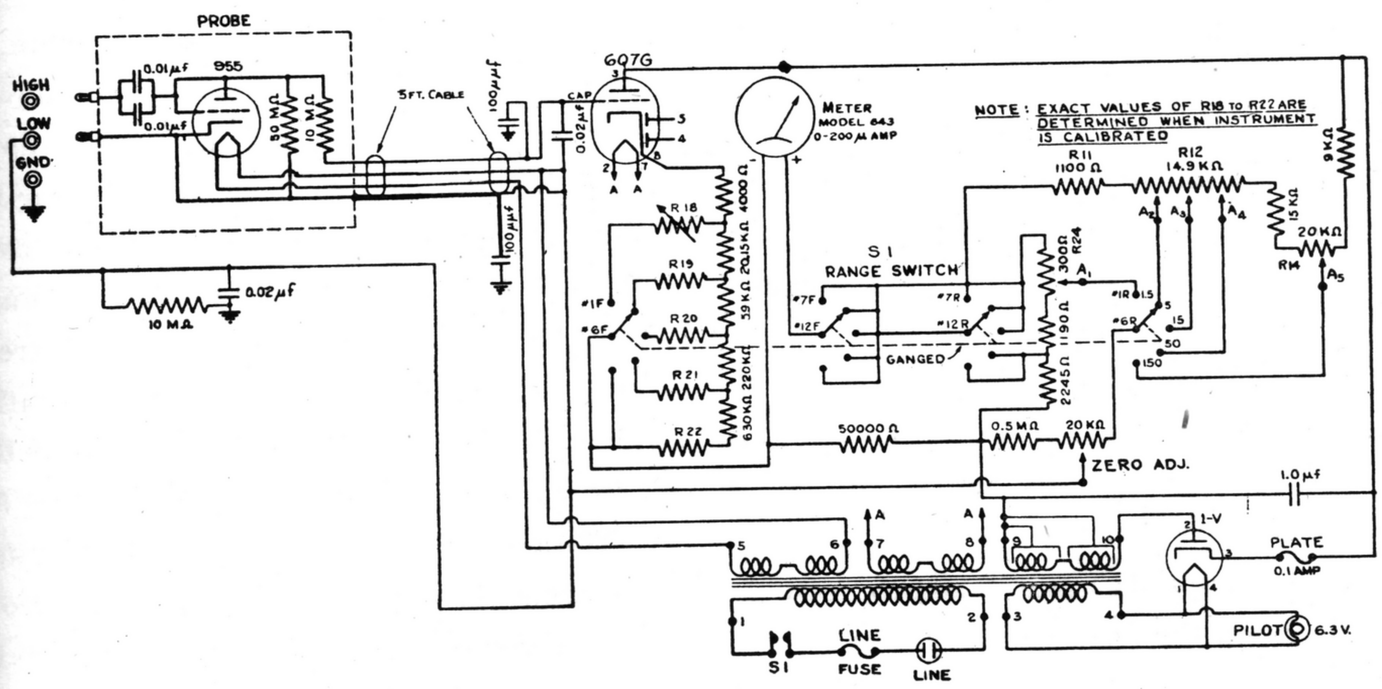

FIG. 13

Fig. 12 is a complete picture of the instrument.

Fig. 13 is a complete circuit diagram of the instrument.

Operating Instructions Type 726-A Vacuum Tube Voltmeter

Zero Setting.

Short circuit High and Low terminals and vary the zero adjustment knob until the meter reads zero. A single adjustment is sufficient for all scales.

Measurements.

Voltages may be measured at the panel terminals with the probe in place at the rear of the cabinet or at the probe terminals with the probe removed from the cabinet. The Low terminal is grounded to the panel through a .2 R.F. Condenser and may be directly grounded at the panel terminal "A" if so desired.

The instrument measures the voltage actually appearing at the cathode and plate of the 955 type rectifier tube in the probe. At high radio frequencies, therefore, care should be taken not to place the cable too close to the voltage source, as standing waves may be set up in the shield, resulting in voltage being transferred backward to the input terminals.

Vacuum Tube Replacements

Replacement of either the type 955 or type 6Q7-G tube will, in general, require readjustment of the movable contacts, A_1, A_2, A_3, A_4 and A_5 on resistors R_{12}, R_{14} and R_{24} in Fig. 13 to make the zero settings coincide on the different ranges. To make this adjustment, the instrument must be removed from the cabinet and the respective contacts adjusted until the zero reading is the same for all five ranges. Then after the instrument is replaced in the cabinet, the external zero adjustment will bring all ranges to zero at the same point.

Replacement of the 955 or 6Q7 tubes will cause no substantial change in the calibration except possibly for the 1.5 volt range where a readjustment of resistor R_{18} will correct any error. This is a screw driver adjustment on the card mounted on the meter. If either tube is abnormally gassy, however, the calibration may be affected appreciably.

Hickok Model 110 Vacuum Tube Voltmeter

Another outstanding instrument developed primarily for service and research work, utilizing the diode-condenser rectifier and D.C. amplifier arrangement for measuring A.C. voltages and using the degenerative D.C. amplifier for measuring D.C. voltages is shown in Fig. 14.

The input for the A. C. section consists of a type 955 acorn tube used as a diode rectifier, an input blocking condenser, and a one megohm resistor mounted in a probe so as to keep the capacitance and inductance of the input loop at a minimum. The rectified D.C. voltage which appears as a charge across condenser C_1, filtered from A.C. by means of the 1 Megohm series resistance, is then applied to the grid circuit of the 6K5-G degenerative D.C. amplifier section contained in the meter cabinet.

The input for measuring D.C. voltages is brought out to suitable terminals provided on the panel of the instrument. Two connection changes are necessary to change the vacuum tube voltmeter from an A.C. voltmeter to a D.C. voltmeter. One consists of turning a switch from the A.C. to D.C. position and when this is done, the zero meter setting is no longer at the extreme left hand edge but at the center of the scale. Normally no readjustment of the balance con-

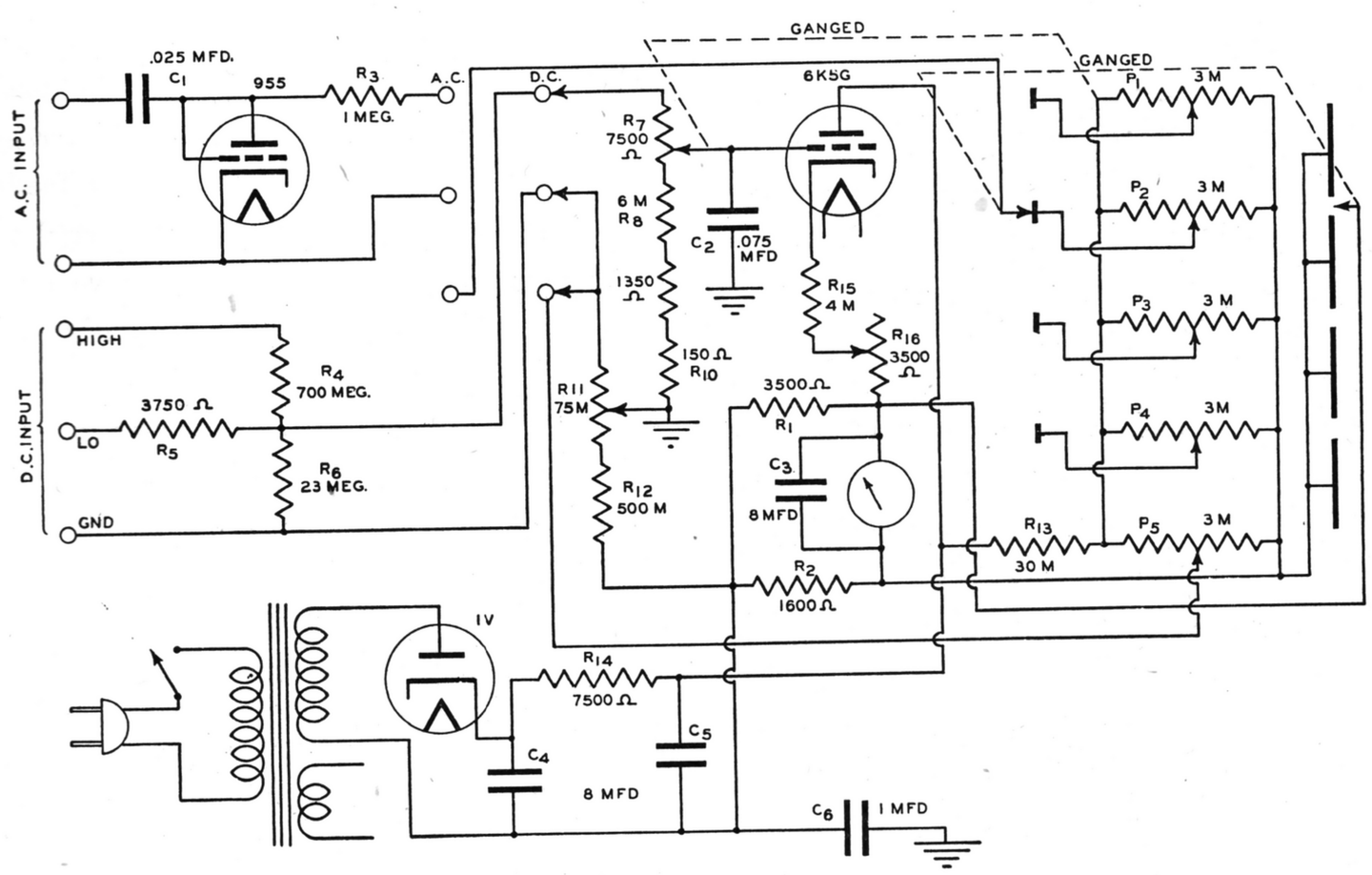

FIG. 14

trol is required in order that the pointer come to the exact center of the scale when switched to the D.C. position, since the switch cuts in the proper balancing network. This arrangement permits measuring D.C. voltages of either polarity from a common ground point, usually chassis, without bothering to reverse the lead connections.

One other change is the voltmeter input circuit which in the case of D.C. measurement comes through the jack on the instrument panel instead of through the probe. The probe may be disconnected and put aside when making D.C. measurements if so desired.

There are two separate D.C. range selectors, one being from ground to the Low D.C. post, and the other from ground to the High D.C. post. In the Low position the ranges are 0 to 1.5-3.0-15 and 150 volts, in the High position 0-75-150-750 and 7500 volts. The input impedance is approximately 15 megohms on the low range and approximately 750 megohms on the high range. There are four A.C. ranges; 0-1.5-3-15-150 volts.

The D.C. Voltmeter Amplifier Circuit

This section consists of a type 6K5G tube with the meter in the cathode circuit. The tube acts as a degenerative amplifier and consequently has a nearly linear plate current change with respect to the applied D.C. grid voltage. The grid voltage is applied negatively with respect to the cathode and consequently the limiting current through the meter is always the bucking voltage which has been applied, so there is little possibility of damage to the meter.

The 3500 ohm variable resistor R_{16} in series with the cathode is used as a sensitivity adjustment to compensate for various tubes. Should recalibration become necessary due to tube changes, this control is readjusted until proper calibration is obtained. Adjustment on any range, A.C. or D.C. is sufficient to bring all ranges into calibration. When using the D.C. voltmeter section, the D.C. is applied to the 6K5 grid in the same manner that the rectified A.C. was applied. The range change switch is a 3 section 4 position switch, one section of which is used to short out the meter during the time when the contacts of the other sections would normally be open between positions. One of the sections acts on the voltage dividing input circuit and connects the grid to the proper taps to establish the proper voltage ranges. The other acts to provide the proper bias for the various ranges so that zero adjustment on the panel is unnecessary when changing from one range to another. The balance control (R-11) is on the front panel. Other adjustments are preset at the factory so that when ranges are changed, the various biases supplied to the grid of the tube, will be automatically corrected and always bring the meter back to the zero position.

It is well to mention that adjustment of any of the 3,000 ohm zero centering controls in no way effects the calibration or accuracy of the equipment, but merely shifts the grid to the proper operating point to give zero meter reading. As a result of recalibration necessitated by changing tubes, it is sometimes necessary to readjust the center controls. To do this, set the balance control on the panel to zero and adjust each of the four A.C. range zero adjustment controls found in the rear of the chassis, so that the pointer rests at zero on each of the A.C. ranges. Then change over to the D.C. range and adjust the one D.C. control P_5 so that zero comes to the center of the scale on the D.C. range. The reason it is necessary to change the grid bias return on each range of the A.C. section is due to the emission current of the Type 955 tube, providing approximately 1.5 volts drop across the voltage dividing network which feeds the grid of the 6K5 tube. As the grid is changed from one range to another, various potentials are applied to the grid, whereas in the case of the D.C. section, no emission potential is applied across the voltage dividing circuit and therefore the grid receives the same bias regardless of the range on which it is connected.

Line Voltage Compensation

It will be noted, Fig. 14, that there are two voltages tending to produce current through the meter in opposite directions. One of these is the voltage delivered by the power supply and in which case the current flows from B— through the 3500 ohm resistor R_{16}, through the meter from left to right, over through P_1, P_2, P_3, P_4, and P_5, then through the 30,000 ohm resistor R_{13} to B+. Current in the meter as a result of this potential varies directly as the output voltage of the power supply system.

The other current tending to flow through the meter in opposite direction flows from B— through the 1600 ohm resistor R_6 through the meter from right to left on through to the tube cathode, to the plate then to B+. The magnitude of this current is not only a function of the voltage delivered by the power supply, but also of the emission current from the cathode of the 6K5 tube. The circuit is so arranged that as the line voltage drops from 110 volts down to 100 or increases from 110 to 130 volts, the current through the meter can actually be dropped in proportion, but since the two currents are bucking each other, the resultant current in the meter is held constant and consequently the sensitivity of the amplifier constant.

FIG. 15—HICKOK MODEL 110

The extremely high input impedance of this instrument and its stability and ease of operation make it a very valuable and flexible service tool.

Meissner Analyst

Another interesting vacuum tube voltmeter is found as one of the units in the Meissner Analyst, a circuit diagram of which is shown in Figure 16. In this instrument a 6E5 magic eye tube is used as an indicating device and a direct reading dial calibrated in terms of volts being used from which to read the value of the voltage being measured.

A 6F5-G tube is used as a direct coupled amplifier into the 6E5. The accuracy is independent of the tube characteristics since in the circuit used, the readings are made when the shadow of the 6E5 tube just closes, a condition requiring a given fixed voltage between grid and cathode of the 6F5. When the input voltage prod is shorted to ground and there is no impressed voltage, the grid is biased enough to prevent grid current by the cathode return network, which also is arranged so as to cause the 6E5 shadow to just close. When a voltage is applied to the grid network, the voltage between grid and ground or chassis changes, but the cathode bias is shifted by means of the "Volts Scale" potentiometer, until the 6E5 shadow angle is again zero, which re-establishes the initial grid to cathode voltage, thereby maintaining the original operating point on the tube characteristic, but indicating and measuring the new voltage.

The range of the instrument is obtained by means of a voltage dividing network in the grid circuits, providing 0-5-15-150-500 volt steps.

The initial adjustment and calibration is set up as follows. Set the voltage scale pointer at zero volts and adjust the zero set control near the middle of its range. Then connect a high resistance voltmeter (1,000 ohms per volt or so) across the voltage scale potentiometer and adjust the "voltage calibrator" resistor until 9.7 volts is obtained across the Volts Scale potentiometer. This adjustment should be made if possible at normal line 118 volts approximately. Then the zero set potentiometer is adjusted until the 6E5 shadow angle is just zero.

When measuring voltages of an intermittent nature this method of reading voltages on a dial scale, rather than a meter, is of considerable value, since the original setting for zero shadow angle remains unchanged, the shadow angle either opening up or overlapping indicating a voltage change and in which direction, whereas a meter would have followed the variation and unless recorded or remembered, would have been forgotten.

Fig. 17 illustrates the Meissner "Analyst." The vacuum tube voltmeter section is outlined clearly against the shaded background of the other sections.

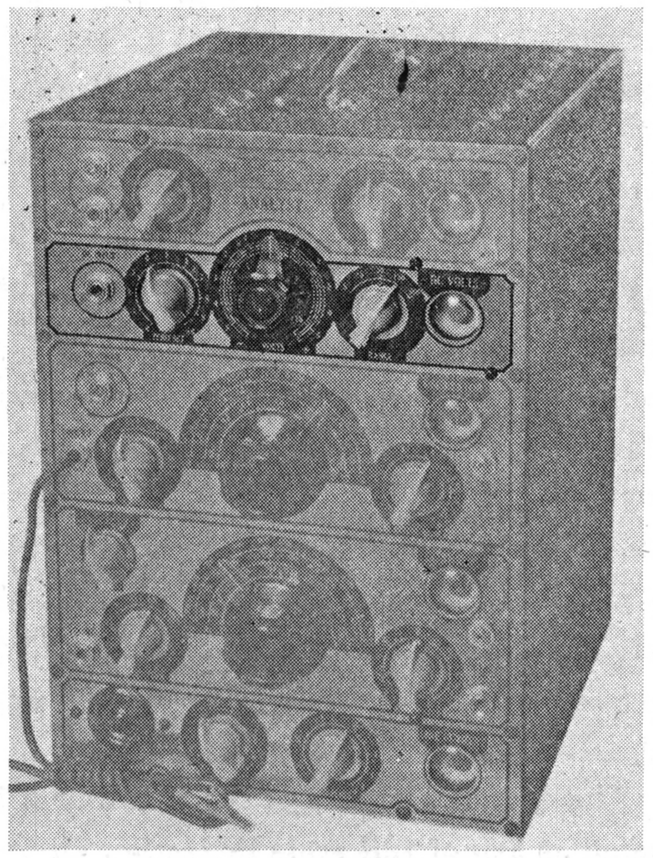

Fig. 17

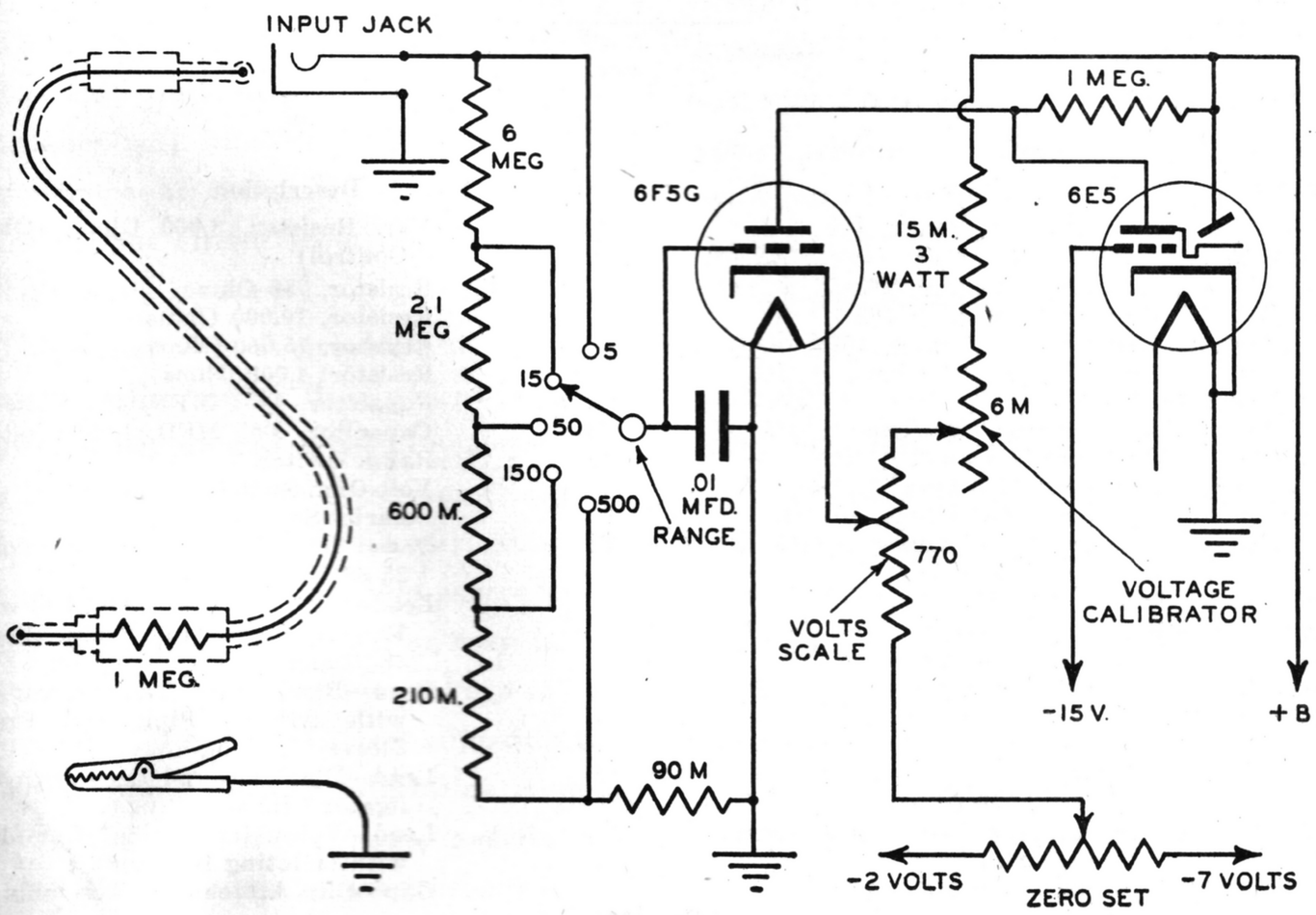

Fig. 16

RCA-Rider Chanalyst Vacuum Tube Voltmeter

Another extremely simple and direct reading vacuum tube voltmeter is used in the RCA-Rider Chanalyst a circuit diagram of which is shown in Fig. 18.

This vacuum tube voltmeter uses a type 76 tube as a D.C. Amplifier, the meter being used to indicate the current in the cathode circuit. A voltage dividing network in the grid circuit is used to increase the range of the instrument and a .001 mfd. condenser from grid to ground is used to bypass any A.C. voltage picked up by the test prod. When measuring A.V.C. voltages etc. at the grids of R.F. stages, a prod with a 1.0 megohm isolating resistance is provided so as to allow the D.C. to be picked up and measured without interfering with the signal or R.F. voltage.

The meter is arranged so that zero is at the center of the scale, and either positive or negative voltages with respect to the reference point (usually chassis) may be measured without need for reversing the leads.

The ranges provided are plus or minus 5, plus or minus 25, plus or minus 100 and plus or minus 500 volts, D.C., all of these ranges having a constant impedance of 10 megohms or 2.0 megohms per volt on the 5 volt range.

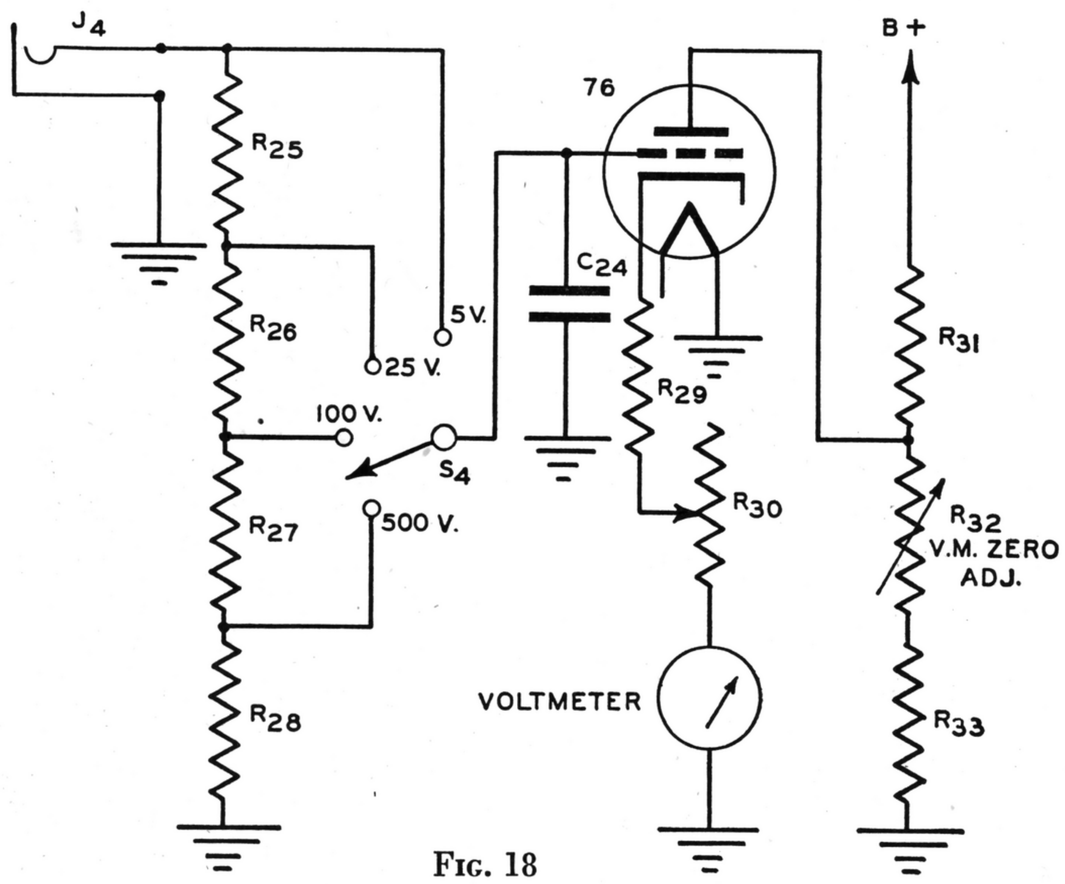

Fig. 18

The overall accuracy of the instrument is rated as 5% of full scale deflection on any range.

RCA Rider Volt Ohmyst

A multi-range instrument, direct reading, and employing an unusual circuit design making its accuracy essentially independent of tube or line voltage changes, is shown in Fig. 19.

With this instrument, one may measure directly D.C. voltages from .05 to 5,000 volts, either positive or negative without loading the circuit under test. Its input impedance

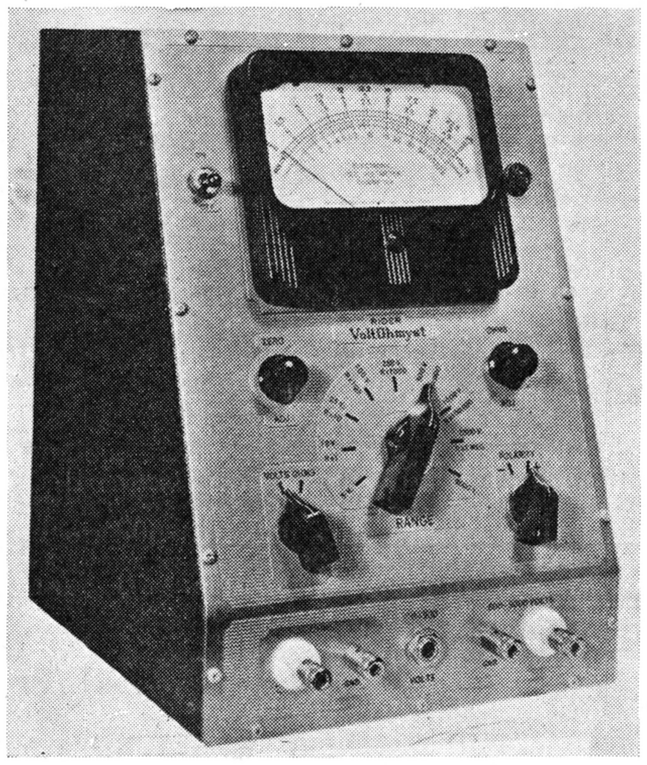

Fig. 19

on all ranges up to 500 volts is 16 megohms and on 500 to 5,000 volt ranges is 160 megohms. Its accuracy is within 2% of full scale. Provisions are also made to measure resistances from .1 ohm to 1,000 megohms in seven decade ranges, each overlapping the other with only one scale to read. Only one zero-setting is required for all ranges. The ohmmeter accuracy is within 3% at center scale. A complete circuit diagram of the instrument is shown in Fig. 20.

Circuit Design

The Volt Ohmyst uses a push-pull vacuum tube voltmeter of new design. The two tubes V_1 and V_2 are linked by means of a common high resistance R_{40}. Because of this coupling, any change in the input voltage to the grid of V_1 changes the cathode bias of V_2, and as a result, the change in the plate current of V_1 is accompanied by a simultaneous change in the plate current of V_2 in the opposite direction. The differential voltage thus developed across the load resistors, R_{45} and R_{43}, is applied to the meter which is calibrated in terms of the voltage applied to the input and in terms

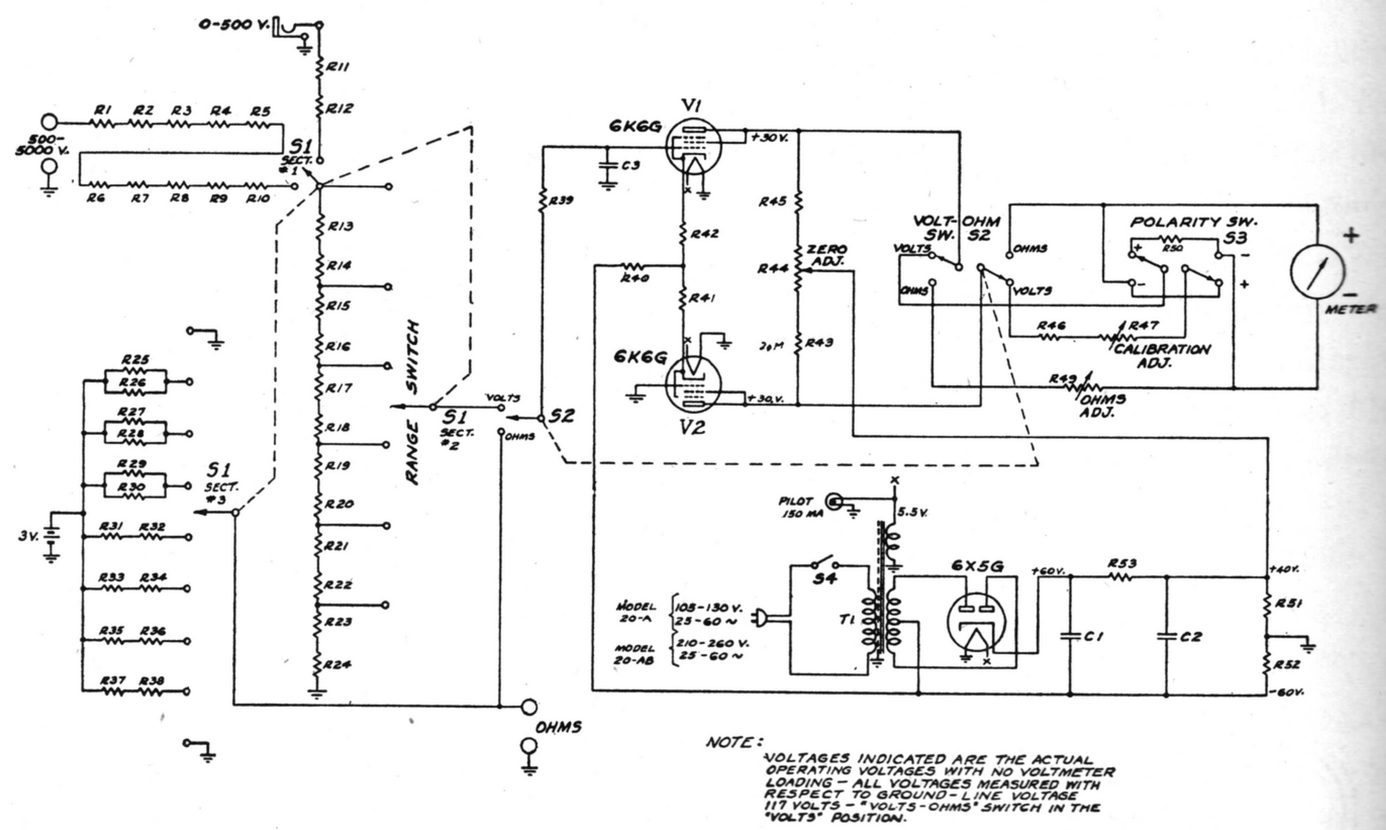

Schematic Nos.	Description
R1, R10	Resistor, 150 Meg. ± 1%
R11, R12, R13, R14	Resistor, 5 Meg. ± 1%
R15, R16	Resistor, 3 Meg. ± 1%
R17, R18	Resistor, 1.5 Meg. ± 1%
R19, R20	Resistor, 300,000 Ohms, ± 1%
R21, R22, R23, R24, R33, R34	Resistor, 100,000 Ohms, ± 1%
R25, R26	Resistor, 10 Ohms, ± 1%
R27, R28	Resistor, 100 Ohms, ± 1%
R29, R30	Resistor, 1,000 Ohms, ± 1%
R31, R32	Resistor, 10,000 Ohms, ± 1%
R35, R36	Resistor, 1 Meg. ± 1%
R37, R38	Resistor, 10 Meg. ± 1%
R39	Resistor, 2.5 Meg.
R40	Resistor, 56,000 Ohms
R41, R42	Resistor, 3,300 Ohms, ± 5% BW 1
R43, R45	Resistor, 20,000 Ohms
R44	Var. Resistor, 3,000 Ohms (Zero Control)
R46	Resistor, 2,000 Ohms
R47	Var. Resistor, 7,000 Ohms (Calibration Control)

Schematic Nos.	Description
R49	Var. Resistor, 8,000 Ohms (Ohms Control)
R50	Resistor, 750 Ohms
R51	Resistor, 10,000 Ohms
R52	Resistor, 15,000 Ohms
R53	Resistor, 4,000 Ohms
C1, C2	Capacitor, 1—1 MFD, 400 Volts
C3	Capacitor, .005 MFD, 1,000 Volts
S1	Range Switch
S2	Volt-Ohm Switch
S3	Polarity Switch
T1	Power Transformer, 105-130 Volts, 25-60 Cycle
	Lead—Red Test Lead Complete with Banana Plug and Probe Sleeve 48" Long
	Lead—Black Test Lead Complete with Banana Plug and Probe Sleeve 48" Long
	Lead—Black Ground Lead with Alligator Clip and Plug
	Lead—Voltmeter Cable Complete with Isolating Resistor
	Clip—Clip Attachment Assembly

Fig. 20

of the resistance being measured when the instrument is used as an ohmmeter.

In addition to the push-pull action, a high degree of self regulation is obtained as a direct result of the high value of coupling resistance, R_{40}. This is analogous to the regulating effect secured through the use of self-bias but because R_{40} is approximately 100 times as large as the value of the cathode resistance which it is possible to use in conventional circuits, the self-regulating action is correspondingly increased. At the same time, excessive loss of sensitivity normally experienced when using such a high cathode resistance is eliminated because of the balanced nature of the circuit. A controlled amount of inverse feedback to obtain independence of tube characteristics is secured by means of the two resistors, R_{41} and R_{42}. A principal factor limiting the maximum input resistance of D.C. vacuum tube voltmeters has been the problem of reducing grid current and the so-called "contact potential" error to a low value. In this design, the problem has been met successfully by the choice of a suitable type tube, the use of a very high cathode resistance, and by operation at a low plate voltage. The ohmmeter circuit utilizes the vacuum tube voltmeter described to measure the ratio between the voltage across the unknown resistance and one of seven standard resistors. The latter range in value from 10 ohms to 10 megohms so that multiplying factors of R times 1 to R times 1,000,000 are provided.

The probe provided for the 0-500 volt input circuit contains a 1.0 megohm isolating resistance built into the prod to prevent the capacitance of the cable and the instrument's input circuit from reacting on the circuit being measured.

This instrument is provided with a calibration adjustment, R_{47}, which is originally factory set and is used to compensate for small variations in meter sensitivity or tube characteristics. Ordinarily, this adjustment requires no attention except when tubes are replaced. The meter may be recalibrated by using a known voltage source of exactly 5.0 volts D.C. and adjusting the vacuum tube voltmeter calibration control R_{47} so that the meter reads exactly 5.0 volts with the Range switch in the 5.0 volt position.

The Volt Ohmyst uses 2-6K6G tubes and 1-6X5G. Because of the low operating voltages, the tube life will be exceptionally long. However, when replacement becomes necessary, care must be taken to see that the tubes are approximately balanced. If they are unbalanced, it is not possible to bring the pointer to zero by means of the Zero Adj. Control. When the tubes are matched, the Zero Adj. Control will bring the pointer to zero in approximately the center of its range.

The circuit design is such as to reduce grid current to a negligible value. When replacing tubes, it is advisable to check for grid current as occasionally a gassy tube will be found. The presence of gas is indicated by an appreciable change in pointer position when the Range switch is changed from the 5 to 25 volt position.

Special Signal Tracing Equipment

The wide variety of measurements, and therefore usefulness of a vacuum tube voltmeter in radio maintenance work is limited only by the design or capabilities of the instrument available and by its users working knowledge of how the circuits and components being measured should normally operate.

For obvious reasons, it is necessary to locate the defect and restore the set to normal operation in the shortest possible time. As a means of rapidly localizing the fault to some particular section of a receiver, a system of testing, described as Signal Tracing, or Signal Chasing, has been introduced and has met with a large approval from the field. All of the instruments recommended for use in this method of receiver analysis are basically vacuum tube voltmeters of some form or another, mainly because of the necessity of measuring the signal voltage from the antenna to voice coil with a minimum interference to the signal circuits being measured. With this minimum interference idea in mind, vacuum tube voltmeters have been designed and introduced which measure or indicate signal voltages as low as a few microvolts without appreciably loading the circuits being measured. This loading is limited to the extent of a few micro-microfarads probe capacity, so that the probe may be directly applied in order to pick up the signal and indicate its intensity, frequency and quality through the various stages of the receiver to the demodulator stage. For this purpose, a T.R.F. amplifier is usually employed which will cover the desired frequency range and is provided with a calibrated input attenuator so that a wide range of voltages may be measured. Usually, the complete instruments, in order to simplify their design and increase their usefulness, are provided with several vacuum tube voltmeters, intended for use in measuring specific types of signal voltages. For example, the RCA-Rider Chanalyst has 5 separate vacuum tube voltmeters or channels, namely the R.F.-I.F. channel, which measures voltages by means of a 3 stage tuned R.F. amplifier over a frequency range of 95 to 1700 K.C.; the Power Consumption Indicator, which measures line currents in terms of watts from 25 to 250 watts; the Oscillator Channel, which measures voltages by means of a one stage T.R.F. amplifier from 600 to 15,000 K.C.; the Audio Channel, which consists of a one stage amplifier and is used to measure A.C. voltages covering the audio frequency range; and the D.C. electronic voltmeter previously described which measures D.C. voltages directly in 4 ranges, 0 to plus or minus 5, plus or minus 25, plus or minus 100, and plus or minus 500 volts. The manner in which this is done is readily apparent by examining Fig. 21 in which is reproduced a complete schematic of the RCA-Rider Chanalyst. The amplifier outputs are rectified by diodes which in turn actuate the 6E5 indicator tubes. The wattage indicator employs a current transformer in series with the load, the secondary voltage being rectified by a diode and actuating a 6E5 indicator, which is calibrated in terms of watts required to just close the eye.

Many other similar instruments are now available, such as the Hickok Traceometer, in which meters are used in place of the Eye Tubes to directly indicate the value of the voltages being picked up; the Meissner "Analyst" whose operation is similar to the description in the preceding paragraph, the Rimco "Dynalizer," which features a built-in speaker, so that the signal may be heard as well as measured, as it is taken from any stage of the receiver. Multi-channel instruments are particular-

ly valuable in servicing a receiver in which the fault is of an intermittent nature, since each channel can be used to monitor or listen in on the signal simultaneously at several stages of the receiver, so that when the trouble occurs, it can be isolated down to a particular stage, at its first occurence.

The vacuum tube voltmeters discussed at the beginning of this article which were designed for measuring A.C. voltages, indicate or measure the resultant of all frequencies applied to their input terminals, being limited only by the physical design of their input circuits (probe, tube, lead capacities, etc.) and in a number of cases as described are kept small enough (6 micro-microfarads or less) so that their probes may be directly attached at any of the R.F. or oscillator grids in the receiver, without appreciably detuning or loading the circuits being measured. Vacuum tube voltmeters of this untuned type, having readable sensitivities down to approximately .1 volt may usually be employed to directly trace the signal voltage of an entire receiver from antenna to voice coil providing a source of signal of .1 volt or more is available. Most signal generators employed by service men are capable of this output.

As a means of illustrating the ease with which a receiver defect may be located by using a vacuum tube voltmeter, the following discussion is in order.

Servicing Receivers with the Vacuum Tube Voltmeter

Since the tubes themselves are one of the most probable causes of set failure, it is customary to check all tubes in the receiver being repaired as a routine matter, prior to making any further tests. If the rectifier tube is found defective, especially in cases where it shows signs of having been over-

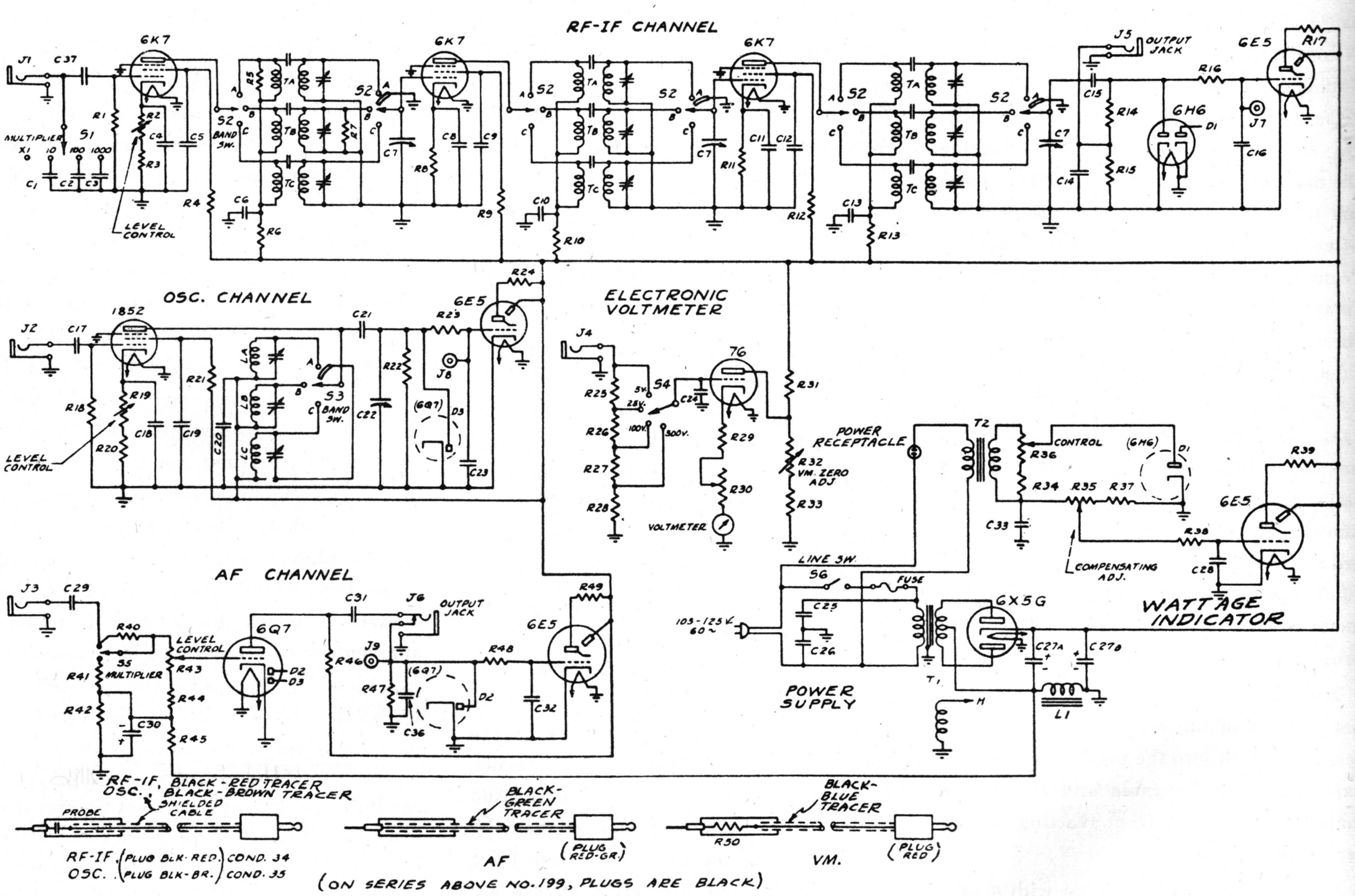

FIG. 21—RCA-RIDER CHANALYST

SYMBOL	Description Resistors
R1, R45, R46	250M Ohms
R2	9,000 Ohms
R3, R8, R11	350 Ohms
R4, R7, R9, R12, R18	100M Ohms
R5	4,000 Ohms
R6, R10, R13	1,500 Ohms
R14, R15, R22, R37	500M Ohms
R16, R23, R38, R40, R47,	2 Megohms
R17, R24, R39, R48, R49, R50,	1 Megohm
R19	9,000 Ohms
R20	200 Ohms
R25	8 Megohms

SYMBOL	Description Resistors
R26	1.5 Megohms
R27	400M Ohms
R28	100M Ohms
R29, R33	6,000 Ohms
R30	2,000 Ohms
R31	27,000 Ohms
R32	10,000 Ohms
R34	1,900 Ohms
R35	500M Ohms
R36	17,000 Ohms
R41, R44	20,000 Ohms
R42, R21	75M Ohms
R43	2 Megohms

CONDENSERS	
C1	.0014MF
C2	.015MF
C3	.15MF
C4, C5, C6, C8, C9, C10, C11, C12, C13, C20	.1MF
C7	RF-IF Tuning
C14, C24	.001MF
C15	.0002MF
C16, C18, C19, C21, C23, C28, C31, C32, C37	.01MF
C17, C36	.0001MF
C22	Osc. Tuning
C25, C26, C33	.05MF
C27a, C27b	8-8MF
C29	.01MF
C30	10MF
C34, C35	RF-IF Coupling

Note: Condenser C-37 and pin jacks J7, J8 and J9 are used only on series above No. 199.

loaded, such as burnt off cathode tabs, or burnt out filaments, it is logical to check for anything in the B supply system which might be heavily overloading the rectifier tube, before placing a new rectifier tube in operation. This can quickly be done by checking the D.C. resistance between one plate and cathode or filament of the rectifier tube socket with an ohmmeter, or in whatever manner the circuit and instruments available require.

A wattmeter may be used as a rapid means of determining whether a set's power supply system is normal. Excessively high readings from the rated value of the set indicates some overload condition and excessively low readings indicate some open circuit condition of the power supply. Obviously a fault here must be corrected before proceeding with any further tests. In the case where abnormally high power is being drawn, there is either a shorted transformer winding or some short in the B supply system. When the rectifier tube is removed and the only load on the transformer is the tube filaments and the high power is still drawn, it is very likely that the transformer is at fault. Usually transformer failure occurs in the high voltage windings. This may easily be checked by measuring the secondary voltages, any decided unbalance between the voltages appearing across each half of the winding, indicating a fault. A vacuum tube voltmeter is not necessary in measuring such power transformer voltages where appreciable power may be drawn. However, there is certainly no disadvantage in using one for this work.

Having eliminated the transformer and rectifier tube as the cause of power supply failure, a routine check with the ohmmeter will readily locate the defective component; usually a filter or bypass condenser in the case of high wattage readings, or an open speaker field, choke or faulty connection interrupting the B voltage supply in the case of low wattage reading. In locating the cause of an open circuit failure in the power supply, the vacuum tube voltmeter is a convenient tool, the voltage being traced through the power supply system until the point at which it disappears is located. The vacuum tube voltmeter also provides a rapid means of checking the peak surge voltage applied to the input filter condenser before the amplifier tubes warm up, in case underrated filter condensers are suspected of having been used.

Signal Tracing

After having determined that the power supply is operating normally, the next step in locating the fault is to apply a signal voltage from a test oscillator. Some convenient frequency close to the low frequency end of the broadcast band and away from any strong locals present, should be used. Trace it through all the stages of the receiver until the point at which it stops or becomes distorted is located. The low frequency end of the broadcast band is preferred, so that the slight probe capacity will have minimum effect in detuning the circuits under test. In tracing the signal through the audio stages a steadily modulated signal is needed, so as to allow stage gains to be measured and the signal traced up to the voice coil.

In checking for oscillations, hum, or other miscellaneous noises present in the receiver without an input signal being applied, the vacuum tube voltmeter is used to locate the source of this voltage which in itself becomes the signal.

Usually testing through with the broadcast band signal is sufficient even on an all wave receiver, if the trouble is present on all bands. If the trouble is in the short wave bands only, one would immediately seek it in the R.F. mixer or oscillator sections, since all other parts of the receiver operate the same on either the broadcast or short wave bands.

Using the signal voltage for testing in the above manner, it makes little difference as to the type or complexity of the receiver or amplifier being tested, the more stages or the more complex the receiver merely adding more points at which to check for normal signal and normal gain. For example, let's take a typical receiver, Fig. 22, and analyze it, using signal tracing methods.

Starting at the antenna, the test oscillator is set so as to deliver some reference signal, as measured by the vacuum tube voltmeter and noted, to the antenna coil or point (1) on diagram. Failure of the signal to appear at point (1) would indicate either a shorted winding or in the case of multi-band sets, where the primaries are switched, some connection failure. Having established a signal at (1) proceed to the R.F. grid or point (2). A signal here indicates proper performance of the antenna coil and also whether the coil is tuning according to the

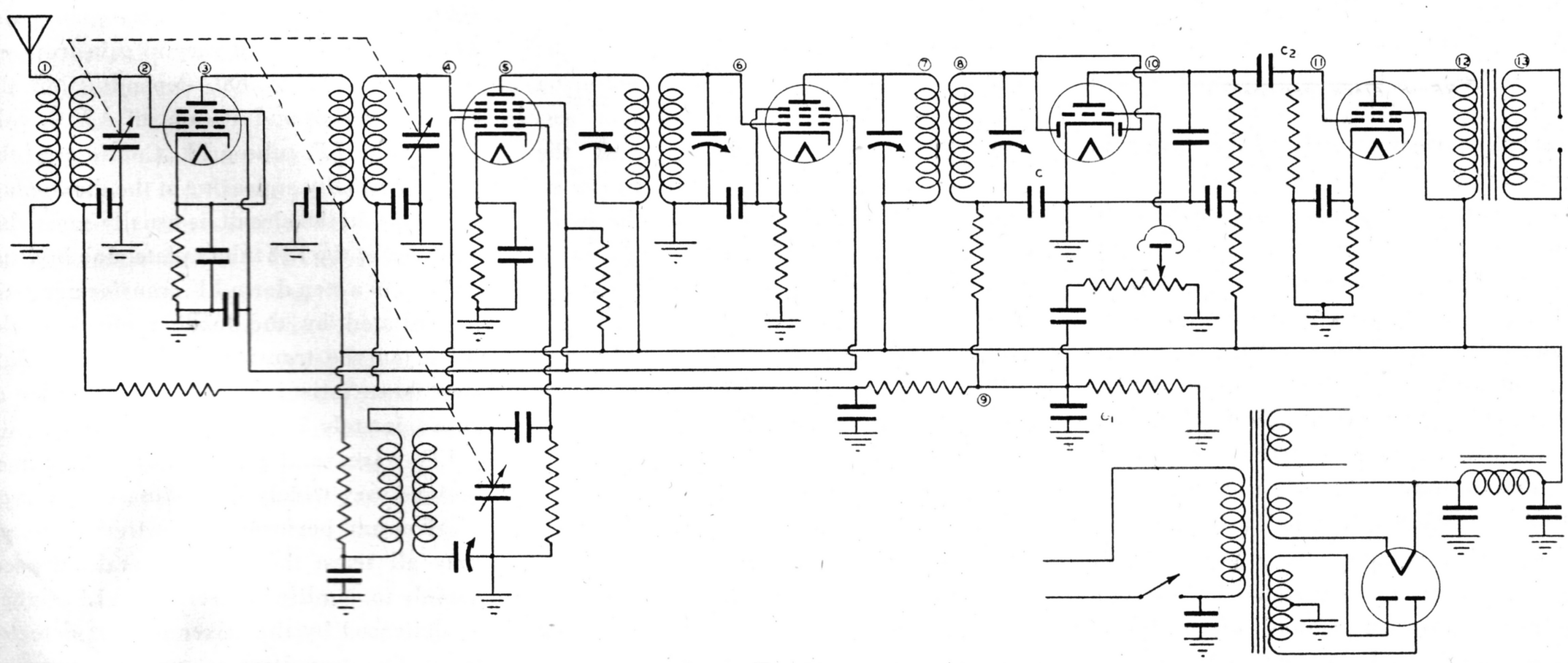

Fig. 22

dial calibrations. It is common to find the R.F. coils not tracking with the dial, especially at the low frequency end of the bands, advantage being taken of their broadness of tuning to allow for production tracking errors.

Antenna coil gains of 3 to 10 are usual in household receivers and from 10 to 50 in auto receivers. Failure of the signal to appear with normal gain at (2) can be caused by the coil not being tuned to the signal frequency, some failure in the coil windings, the A.V.C. condenser open, the tuning condenser shorted or the tube drawing grid current loading the antenna coil secondary, or leakage between the grid to ground. The by-passing action of the A.V.C. condenser can readily be checked by measuring whether any signal appears across it. Normally the capacity of this condenser is high enough as to be practically a short circuit to the signal frequency, and no signal voltage should appear across it.

The next test point is the R.F. tube plate or (3) on the diagram. Normal signal voltage here would indicate that the tube is functioning properly as an R.F. amplifier. Lack of signal or gains appreciably below normal, indicate a tube failure or failure of the tube to receive its proper operating voltages. This can be checked in a routine manner by measuring all its D.C. voltages including its grid bias directly with a D.C. type vacuum tube voltmeter. Should the set have A.V.C., and the input signal be high, causing the A.V.C. to function increasing the bias on the R.F. grid, the stage gain will be lowered and vary widely, depending on the extent of A.V.C. bias applied.

Highest gains will be found when the A.V.C. voltage is at a minimum, corresponding to maximum sensitivity of the tube. In modern sets utilizing high gain, multi-element tubes, usually nearly all the stage gain is realized in the tube itself, whereas older sets using triode amplifier tubes usually obtained most of their stage gain in the coupling transformers, the tube seldom showing a gain of greater than unity. Some modern two gang TRF sets have R.F. stage gains as high as 75, although most 3-gang multi-band superheterodynes usually have an R.F. stage gain of approximately 25 or less, due to thermal noise limitations.

The next check would be for signal voltage at the mixer tube grid or point (4) in Fig. 22. The presence of signal here would establish normal functioning of the transformer coupling the plate circuit of the R.F. tube to the mixer grid. Failure of signal to appear at the mixer grid could be caused by the transformer not being properly tuned (or tracking) or by a defect in the transformer such as shorted or open windings, or by open plate or grid circuit by-pass condensers.

The next check would be for signal voltage at the mixer plate or (5). Here one would expect to find several different frequency voltages, one at the R.F. signal frequency, at the oscillator frequency, and at the sum and difference frequencies, as well as harmonics of same. The presence of the signal frequency at the plate indicates that the tube is operating as an amplifier and the presence of the I.F. frequency (nearly all receivers use the difference beat between signal and oscillating as the I.F. frequency) would indicate proper operation of the oscillator as well. Failure of the proper I.F. frequency to appear here with a normal expected conversion gain may be a result of incorrect alignment, lack of proper tube element voltages, defective mixer tube, or low oscillator voltage.

In most modern receivers, conversion gains between 20-60 are obtained when the A.V.C. voltage is at a minimum. An untuned type of vacuum tube voltmeter at (5) will read the sum of all the various frequency voltages present, however, the presence of the proper I.F. voltage is quickly established by moving over to the I.F. grid, the I.F. coupling transformer tuning substantially eliminating the other frequencies. Also, the set oscillator could be killed by shorting the oscillator tuning condenser or removing the oscillator tube to establish the presence of the original signal frequency at the mixer plate.

Absence of oscillator voltage may be readily checked either by measuring same at the stator of the oscillator section of the gang condenser with the A.C. vacuum tube voltmeter or by measuring the D.C. developed across the oscillator grid resistor with the D.C. section of the vacuum tube voltmeter. In this manner, the uniformity of oscillation over the entire band may be checked. Should the tube stop oscillating the negative D.C. voltage developed across the grid resistor will drop to zero or become slightly positive with respect to cathode. Normally this negative voltage is a minimum of —5 volts. Excessive oscillator voltages are very unlikely since oscillator design is such that with all components working at maximum efficiency, the proper oscillator voltages are generated and any failure tends to reduce rather than increase the oscillator outputs.

Other oscillator troubles, such as hum modulation, caused either by cathode to heater leakage or an improperly filtered D.C. supply, or to frequency modulation caused by vibration of some part in the oscillator circuit may be present. Hum modulation would show up in the output only when a station is being received and can be located by checking the hum level of the oscillator plate supply with an A.C. vacuum tube voltmeter.

Assuming that the R.F., oscillator and mixer stages are functioning properly, the signal would be traced on through the I.F. amplifier stages up to the second detector or point (8) on Fig. 22. Obviously, for rapid isolation of failure of either the R.F. or audio sections of the receiver, this test could have been made first; however, in cases where the set functions but with low output, it is usually necessary to follow through all the stages, since troubles can be located in this manner, which would ordinarily never be located.

I.F. Amplifiers

The receiver shown in Fig. 22 employs a simple one-stage I.F. amplifier, the output being coupled into a diode rectifier. The signal appearing at the I.F. grid point (6) in the circuit normally should be the same or slightly less than at point (5), the mixer plate, since in modern receiver designs, no gain is obtained in the I.F. transformers, the gain being obtained in the I.F. tube. The signal appearing at the I.F. tube plate point (7) in the circuit will vary in gain from approximately 20 to 100, depending on the receiver design and amount of A.V.C. voltage on the I.F. tube grid. Continuing, the signal normally appearing at the diode plate point (8) in the circuit, is usually somewhat less than at the I.F. tube's plate, due in usual designs to a step down I.F. transformer ratio necessitated by the loading effect of the diode on the transformer secondary. This step down ratio is usually of the order of approximately 3 to 1.

I.F. stages and particularly transformer designs vary widely depending on the type receiver and performance desired, although they all serve the same general purpose, namely to amplify and select the I.F. signal as delivered by the mixer or first detector tube. The transformers may be untuned,

single, double or triple tuned. Special purpose transformers, such as band expanding used for high fidelity purposes or discriminator type used to develop A.F.C. control voltages, etc., have been widely used. In some receivers the coupling between the primary and secondary coils is varied and used as a means of controlling the set's volume.

Troubles likely to occur in I.F. stages commonly are mistuned transformers, open or shorted windings or trimmer condensers, noisy windings usually due to lead corrosion or loose parts, improper tube voltages, etc., all of which can be traced to their source by means of a vacuum tube voltmeter.

Tracing Signal in Audio Systems

Assuming that normal signal is being obtained at the diode plates, but that the set is still weak or inoperative, the process of tracing the signal on through the various audio stages with the vacuum tube voltmeter until the fault is located, would be indicated. In this case, since only the audio component of the signal should normally come through the audio stages, a modulated test signal must be used.

At point (9) Fig. 22, one would expect to find the audio signal which can be measured on an A.C. type vacuum tube voltmeter, and the D.C. component which can be directly measured with a D.C. type vacuum tube voltmeter. Since the average value of the D.C. component varies with the value of the input signal voltage to the diode plate, it is widely used to supply the A.V.C. voltages to the R.F. and I.F. grids. To eliminate the I.F. frequency and its harmonics from the A.F. signal voltage, the bypass condensers C and C_1 are used from the low side of the diode winding and filter resistor to ground. The value of these condensers represents a compromise between I.F. frequency bypassing, and not bypassing the high frequency components of the audio signal. Appearance of the I.F. signal across C or C_1 of any appreciable amount would indicate a failure of this component and may readily be checked with a tuned type of vacuum tube voltmeter, or with an untuned type by switching off the modulation from the test oscillator signal.

The maximum value of A.V.C. voltage appearing across the diode load resistor varies widely in different designs, with a given signal input, a single stage I.F. receiver usually having much higher values than a two stage I.F. set due to the fewer automatic volume controlled stages.

The presence of a small negative bias voltage across the diode load resistance should not be taken for rectified signal voltage in inoperative receivers. This voltage is normal and is due to emission current of the diode. Its value is normally approximately 1.0 volt when the diode load resistance is of the order of .5 megohm or better.

Having established the presence of an A.F. signal at the diode load resistance, the volume control should be advanced to maximum and a check made for the signal at the A.F. amplifier tube plate or point (10) Fig. 22. If the first A.F. tube is a high mu triode a normal gain of approximately 30 would be expected here. Usually the coupling condenser C_2 is of a value sufficiently high so as to have negligible impedance except at very low audio frequencies.

Appearance of the signal at (10) and not at (11) would immediately indicate a faulty coupling condenser, either open or partially or completely shorted. It is extremely important that the coupling condenser have a low D.C. leakage, otherwise plate voltage would be applied to the output grid causing high grid current and rendering the stage inoperative. A weak or distorted signal at (11) could be caused by a defective tube, improper tube bias, overloading of the tube, or incorrect plate voltage, etc. Here again all the actual operating voltages may be measured with a D.C. type vacuum tube voltmeter without affecting the circuit.

Continuing, the signal voltage is checked at the grid and plate of the output tube points (11) and (12) on Fig. 22. Normal gains of 2 to 5 are obtained using triode output tubes. Gains of 10 to 20 are normally obtained with pentode type output tubes although much depends on the output transformer design and the impedance of the voice coil. Due to the step down ratio of the output transformer, the signal appearing across the voice coil point (13) on Fig. 22, will be much lower than at the output tube plate. This voltage step down depends on the rated plate resistance of the output tube and the voice coil resistance. Looking into the voice coil from the output tube plate, the load that the transformer presents to the plate circuit it expressed mathematically as follows:

$$R_{Load} = R_{V.\ Coil}\left(\frac{N_p}{N_s}\right)^2$$

where N_p = pri. turns
N_s = sec. turns

The actual voltage step down will be directly proportional to the turn ratio or $\frac{N_s}{N_p}$. Other factors effect the operation of output transformers, however they are primarily design considerations about which a service man is ordinarily not concerned.

It might be well to point out here that carefully made accurate stage gain measurements are usually necessary only in actual receiver design work, and are unnecessary and time consuming in radio servicing. A service man is primarily concerned with locating, in the shortest possible time, the defective component which usually causes a large, easily identified departure from normal signal levels. A vacuum tube voltmeter provides a means of rapidly locating this point.

Checking Distortion with a Vacuum Tube Voltmeter

Possibly the most direct and convenient method of locating the source of distortion lies in the use of a tuned type vacuum tube voltmeter provided with an audio output jack or audio amplifier and speaker so that the audio component of a broadcast signal may be listened to as picked up from any stage of the receiver. In this way the point at which the signal becomes distorted, picks up hum, or other noises, may be located by a listening test, the stages following this point merely serving to amplify the distortion.

The subject of distortion is very involved and is impossible to cover completely in this article, however, some of the most frequent causes will be mentioned. It may be caused by improper operating voltages applied to the tube elements, by overloading the tube, by rectification where undesired, by regeneration, by introduction of undesired hum or by excessive selectivity causing frequency distortion.

Tube operating voltages may be directly measured with a D.C. type vacuum tube voltmeter so that distortion due to this cause may be easily located. Overloading of an amplifier stage results in serious distortion causing the positive peaks of the signal to be cut off due to the tube drawing grid current. Rectification likewise can cause serious distortion due to the tube being biased high enough to cause the negative peaks of the signal to be cut off. This trouble frequently shows up when attempting to receive strong

local signals with older type receivers employing sharp cut-off amplifier tubes such as the type 224 in R.F. and I.F. stages. The usual remedy for this condition is to substitute a more remote cut-off tube such as the type 235.

Distortion due to regeneration is caused by a part of the amplified signal of a stage or group of stages feeding back into the input grid circuit in proper phase so as to cause oscillation or instability tending towards oscillation. This may be the result of coupling from B supply systems common to both plate and grid circuits and frequently occurs in midget receiver designs which operate at elevated temperatures causing the electrolyte to dry out of the filter condenser thereby decreasing its effective bypassing action. Regeneration may also be the result of slight capacitive coupling between grid and plate circuits resulting from improper lead placement, shielding, etc.

Distortion due to small capacitive couplings from the second detector stage into the grid of the first or second A.F. tubes is frequently found especially at low volume levels and can usually be eliminated by rerouting leads and by adequate shielding.

Distortion due to hum is usually caused by improper filtering of the power supply, however it frequently results from cathode to heater leakage in a tube. Occasionally a tube will develop a serious distortion due to leakage and gas currents causing the grid to go positive after having operated for a period of several hours. Such tube failures usually are not found on tube checkers, but can be readily traced to their source with a vacuum tube voltmeter, when the condition appears in the set.

Distortion and extraneous noises due to loose particles between the speaker voice coil and pole piece or due to the pole piece rubbing the voice coil frequently occurs. Occasionally, particularly in auto sets, this condition occurs noticeably only after prolonged operation or when the speaker is working at its highest temperature.

Oscillation in a receiver can be traced to its source by considering it as a signal and tracing it with an A.C. type vacuum tube voltmeter up to the point at which it originates. Occasionally as a result of regeneration; sometimes due to an output plate circuit bypass condenser being open, especially on pentodes of the beam type, the stage oscillates at a high inaudible frequency causing grid current with its attendant distortion and resulting in very short tube life.

Noise due to some defective component in a receiver or amplifier can usually be traced to its source by considering it as a signal and locating the first point at which it appears.

Noise is frequently caused by worn or otherwise defective volume or tone controls and is usually most noticeable when turning the control.

Noise also frequently results from poor contact between the wipers and rotor of the tuning condenser gang, or from poor contact in any of the dial drive parts showing up when the set is being tuned. In multi-band sets noise frequently develops due to poor contact in the various switch sections.

Occasionally noise develops in an interstage audio coupling transformer usually due to moisture causing electrolysis between windings ultimately resulting in an open circuit. Most of these noises can be traced to their source by using them as a signal and tracing back to the point or stage in which they first appear since the following stages only serve to amplify them.

Use of Vacuum Tube Voltmeter in Special Control Circuits

Automatic volume control or A.V.C. is being used in practically all modern commercial receivers, except possibly the cheapest 2 or 3 tube T.R.F. midget types. The purpose of A.V.C. is to cause the volume output of the receiver to remain constant at any selected level regardless of the variation of the input signals as received by the set's antenna. Actually A.V.C. systems are not this perfect, however, by their use the variation in audio signal voltage output vs. input antenna signal voltage is reduced from something like 100,000 to 1 down to approximately 7 to 1 for an ordinary A.V.C. circuit. A.V.C. circuits employing a separate A.V.C. amplifier stage further reduce this variation. A.V.C. operates by causing the input signal voltage to control the gain of the amplifier stages, so that as the input signal decreases, the set becomes more sensitive, and as the input signal increases the set is made less sensitive. The gains of the various amplifier stages are caused to vary by automatically changing the grid bias applied to the tubes in accordance with the signal output. Since the amplified signal as presented to the second detector stage will vary in proportion to the input signal at the antenna, this amplified signal is used to control the gain or sensitivity of the receiver by controlling the amount of bias applied to the amplifier stages. One of the most simple and direct methods of accomplishing this is shown in Fig. 23. A diode rectifier is used to obtain a D.C. voltage which varies in direct proportion to the amplified I.F. signal voltage E_s as applied to the diode plate and also to obtain the audio component of the signal voltage. Since the diode conveniently performs both functions of detection and supplying A.V.C. voltage this arrangement is widely used in commercial receiver designs,. The D.C. component which appears across the diode load resistance R_1 and R_2 is negative with respect to ground. The resistance R_1 is commonly used as a filter in conjunction with the condensers C_1 and C_3 so as to eliminate any I.F. signal from being passed on to the audio stages. The condenser C_2 is used to couple the audio component over to the grid circuit of the first A.F. amplifier tube. Resistor R_3 and condenser C_4 are used to filter out the audio from the D.C. components so that a steady D.C. voltage is obtained which varies directly as the signal voltage E_s into the diode. The values of C_4 and R_3 are a compromise between good filtering action to the lowest audio frequency encountered vs. the time constant effect of the series R.C. filter. Most modern A.V.C. circuits have a time constant of approximately .1 second, the time constant being the product of the total resistance in the circuit in series with the total capacity of the circuit. For example a series resistance of 2.0 megohm and a total capacity of .05 mfd. would have a time constant of $2 \times 10^6 \times 5 \times 10^{-8}$ or .1 second. Excessive time constant is particularly noticeable during tuning. For example, when tuning from a strong local to a weaker signal, if the circuit time constant were large, the high bias developed by the local signal would not decrease rap-

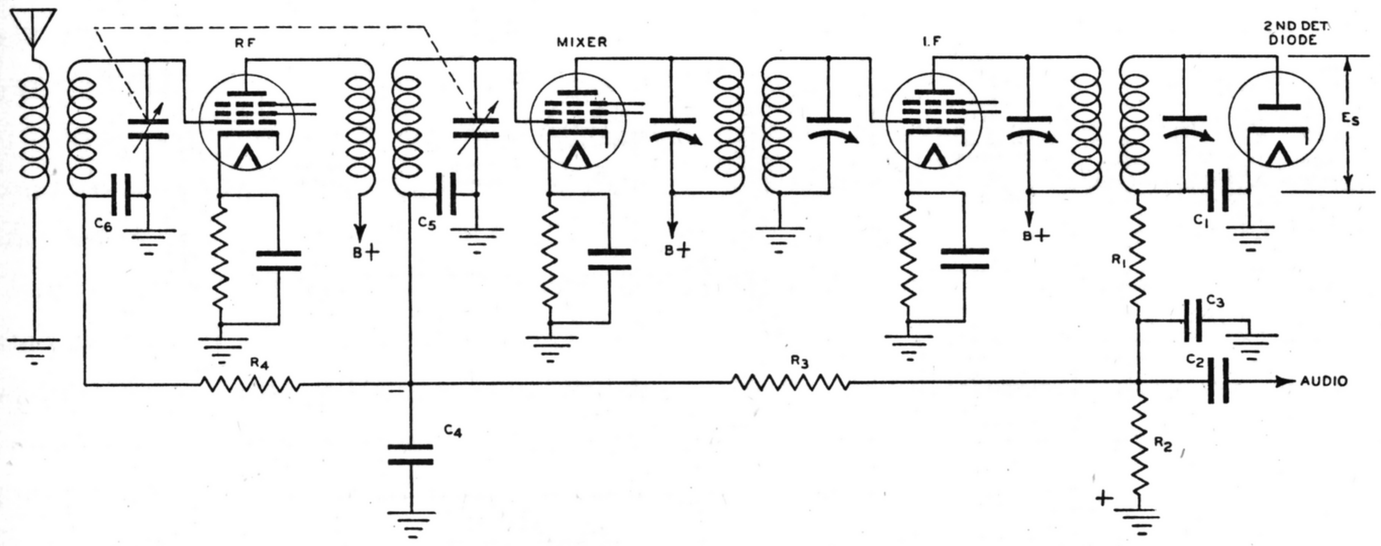

FIG. 23—TYPICAL DIODE RECTIFIER A.V.C. CIRCUIT

idly enough to allow the receiver sensitivity to increase sufficiently for the weaker signal to be heard, unless the set was slowly dialed. When going from a weaker signal to a strong one, the bias would not increase rapidly enough, so that momentary overloading and blasting of the signal would result. For these reasons replacement of resistors or condensers in the A.V.C. network should have values closely as recommended.

Referring again to Fig. 23 it will be noted that the A.V.C. voltage as developed across the diode load resistor R_2 is applied to the grid returns of the R.F. and mixer tubes so that their grid bias and therefore stage gains are controlled by the signal E_s that appears at the diode plate. Since the grids of the tubes draw no current when they are biased negatively beyond their so called contact potential points, the values of the isolating resistors R_3 and R_4 can be and usually are made quite high. For this reason any voltmeter applied at the R.F. or I.F. grid for measuring bias requiring more than a few micro-amperes for its operation will act as a load across the A.V.C. circuit and false readings are obtained. However a vacuum tube voltmeter which draws no current in making its measurements will indicate the actual A.V.C. voltages in any part of the system.

Frequent causes of failure in A.V.C. systems are the R.F. bypass condensers C_5 and C_6 and the audio bypass condenser C_4 developing a leakage resistance low enough to cause serious reduction of A.V.C. voltage actually applied to the tube grids. Similar effects are caused by leakage developing internally between grid and cathode of the controlled tubes. Occasionally a gassy tube will draw enough gas current through the high resistance A.V.C. string that a positive bias will be applied to the A.V.C. grids resulting in blocking and extreme distortion, especially on weaker input signals.

Another simple A.V.C. system commonly used in the older type receivers is shown in Fig. 24 and uses a triode as the A.V.C. tube.

A.V.C. Circuit Using Triode with Plate Operating at Ground Potential

The A.V.C. voltage is developed across R_1 in the triode plate circuit, I.F. signal voltage being applied to the triode grid by means of C_1, causing the plate current of the triode to vary with the signal strength to establish a control essentially the same in principle as previously discussed in connection with the diode type rectifier.

In this system, since it is necessary that the triode plate circuit operate at ground potential, the operating tube voltages are obtained by returning the cathode and grid to points negative with respect to ground. The grid resistors R_3 and R_4 in conjunction with condensers C_2 and C_3 comprise a hum filter arrangement.

In checking this system a slight negative voltage at the A.V.C. triode plate with respect to ground is normal with no signal, and should become increasingly negative with respect to ground as the signal is increased.

Delayed A.V.C. Systems

Delayed A.V.C. is used to retard or delay any A.V.C. action until the signal has reached a desired level, thereby providing maximum receiver sensitivity for weak signals.

Such systems require separation of the function of detection and A.V.C. action because any delay action put on a common detector and A.V.C. tube to cause it not to produce A.V.C. voltage until a certain signal level is reached also would block the audio signal until the same releasing level has been reached.

Most delayed A.V.C. systems make use of the second diode of a double diode tube to perform the delay and A.V.C. function, the other diode being used for detection or audio signal purposes.

In Fig. 25 is shown the delayed A.V.C.

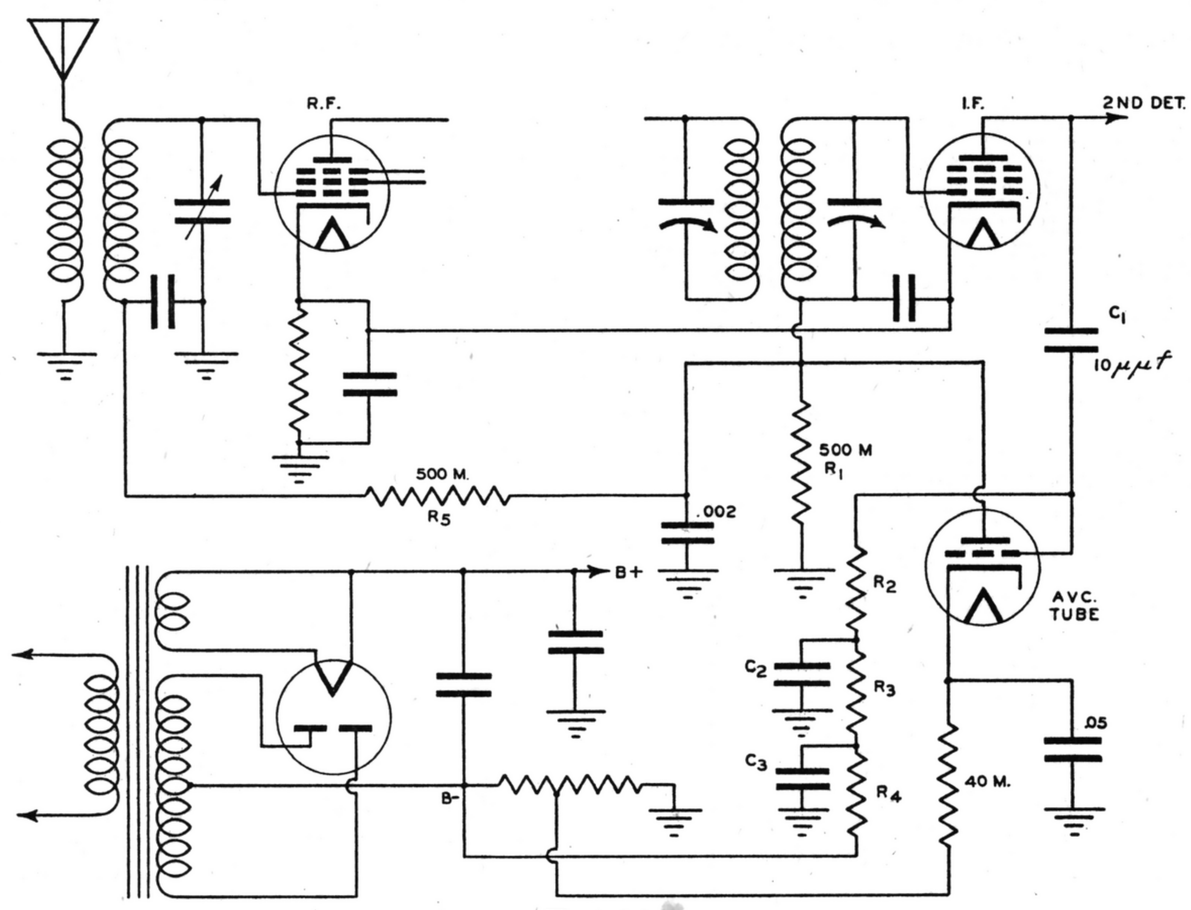

FIG. 24

circuit of a modern receiver which in addition provides the no signal fixed grid bias for the controlled tubes, their cathodes being grounded.

Following the action of diode D_1 in Fig. 25 it is exactly the same as has been previously described for diodes, the A.V.C. voltage appearing across the diode load resistance R_1 and the audio component also being taken from the same place, point (1) on diagram. The second diode D_2 however is shunted across the A.V.C. supply as it comes from the 2.0 megohm audio filter resistor R_3 at point (2) on diagram. It will also be noticed that the cathode of this shunting diode D_2 is made negative with respect to ground or with respect to its plate by approximately 2.0 volts. In other words the plate of D_2 is positive by 2.0 volts with respect to its cathode, so that it will conduct and draw current through R_3, R_2, and R_1 and act as a fairly low resistance load across the A.V.C. supply or point (2). The bias due to the diode current through R_3, R_2, and R_1 will then appear at point (2) and serves as initial bias for the R.F. and I.F. tube grids.

For weak signals then that cannot produce an A.V.C. voltage of more than 2.0 volts across R_1, the conducting diode D_2 effectively shunts the A.V.C. voltage as appears at point (2). However on stronger signals when the A.V.C. voltage exceeds 2.0 volts this A.V.C. voltage is applied negatively with respect to ground in the plate circuit of D_2 bucking out the effect of the positive plate voltage from the cathode circuit and effectively making the D_2 plate negative so that it no longer conducts, its shunting effect on the A.V.C. is removed, and the A.V.C. system operates normally. This type circuit, due to the use of a 2.0 megohm (or higher in some cases isolating resistance) R_3, is particularly susceptible to any gas currents from the controlled tubes, resulting in zero or positive bias appearing at point (2) which of course causes mushy or distorted reception.

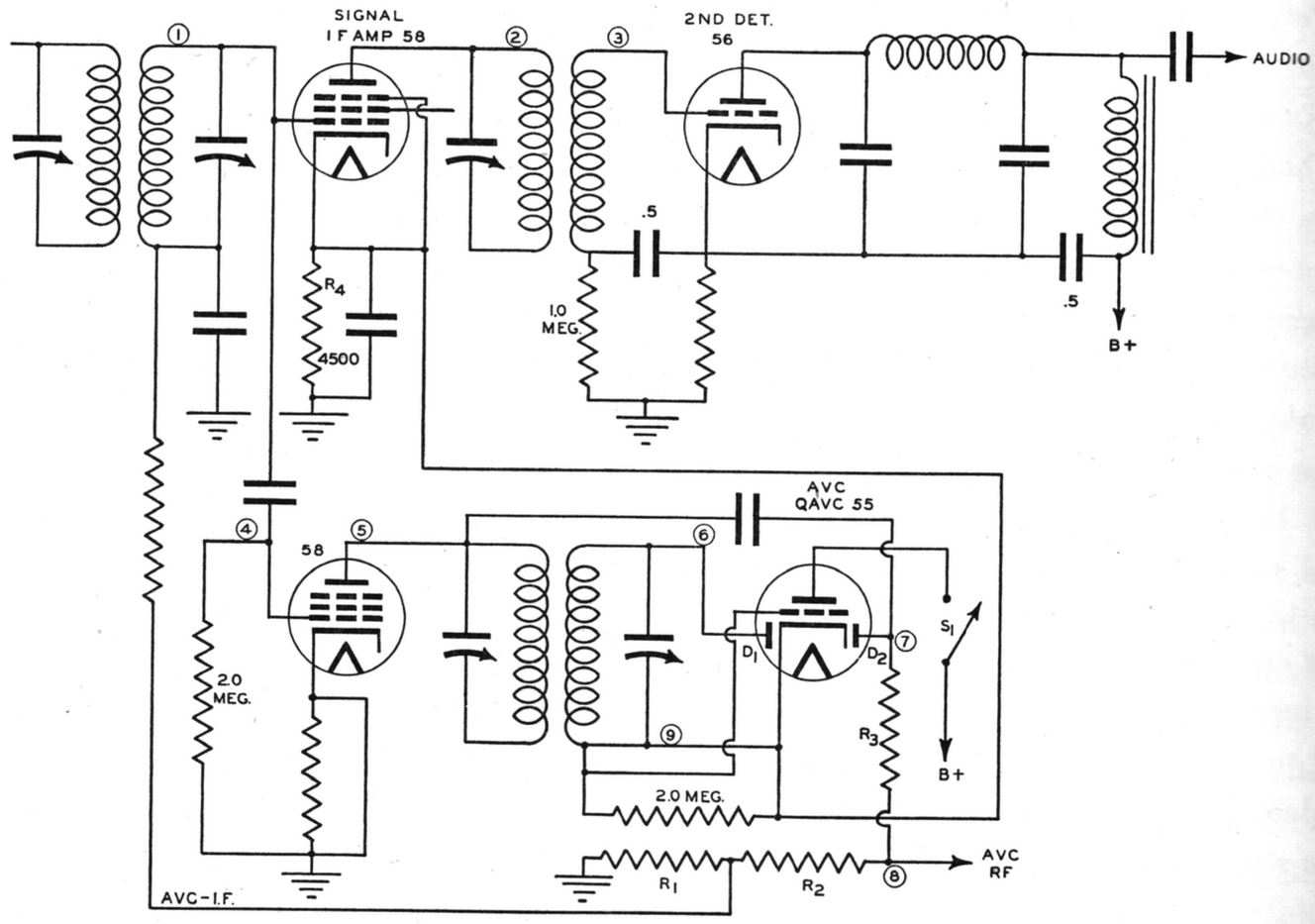

FIG. 26

Squelch or QAVC Circuits

QAVC circuits are frequently used to eliminate interstation noise when tuning a receiver. They operate by blocking the signal usually in the first audio stage, although some designs block either the I.F. or second detector and prevent any signal output of the set until the signal strength of the incoming signal has reached a predetermined level. Thus interstation noise on signals lower than this "squelch" level are suppressed. Most designs also provide a control for adjusting this "squelch level" to the particular location requirements or a switch which eliminates the squelch action completely.

The actual circuit designs for accomplishing QAVC vary widely, although they all accomplish the same purpose.

In Fig. 26 is shown the QAVC circuit of the RCA Model R-78 which operates by heavily biasing the signal supplying I.F. amplifier circuit until the input signal is sufficiently high as amplified by the I.F.-A.V.C. amplifier stage to cause the triode section of the 55 tube to drop its plate current, thereby removing the blocking bias from the cathode circuit of the signal I.F. amplifier tube.

This circuit can be readily checked in operation with the vacuum tube voltmeter by first following the I.F. signal through from the signal I.F. amplifier grid, point (1), over to the plate, point (2), and over to the grid of the second detector point (3). On weak signals, approximately 50 microvolts or less into the antenna when the switch S_1 is closed causing the QAVC to function, very little signal should appear at points (2) and (3) due to the high bias developed across

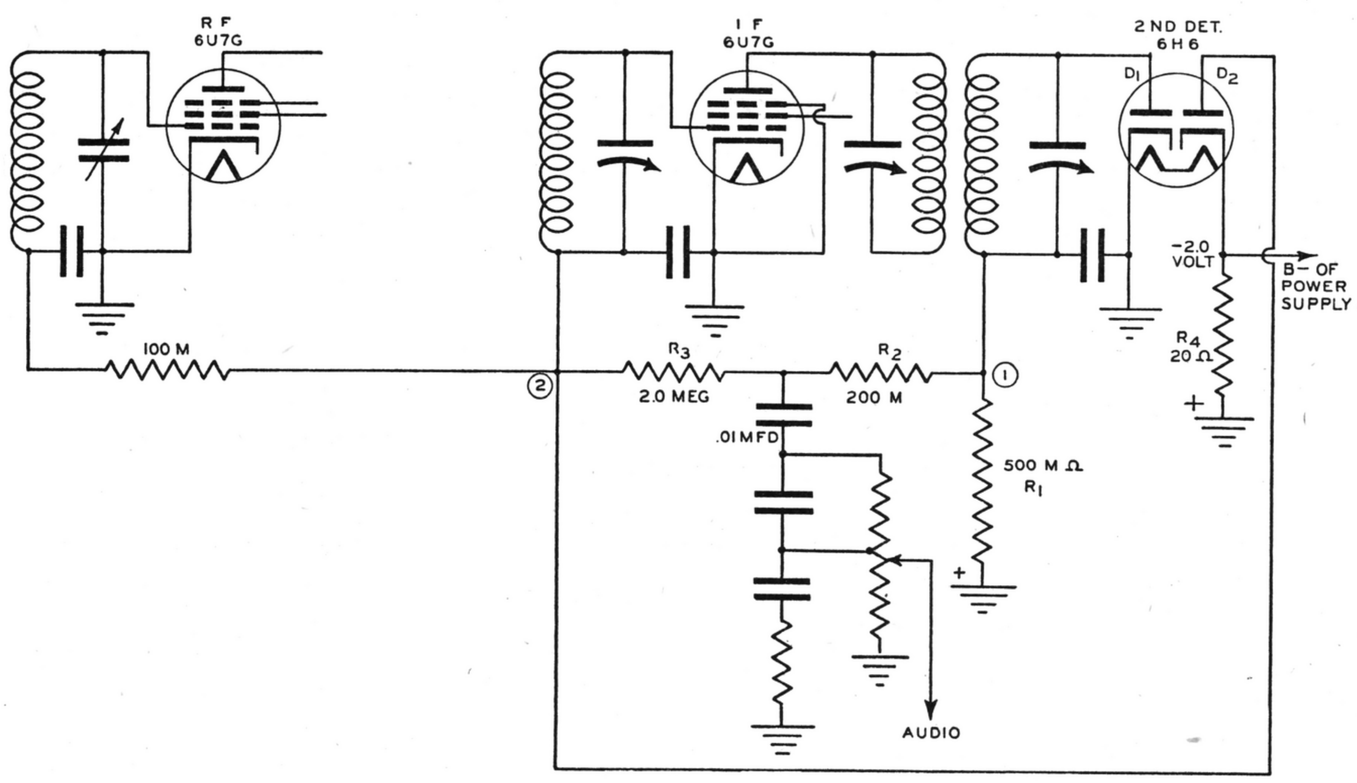

FIG. 25

R_4 by the plate current of the triode section of the QAVC type 55 tube. On stronger signals, however, this blocking bias should drop and normal I.F. signal gains would be expected at points (2) and (3).

The I.F. signal which appears at point (1) is taken over to an I.F., A.V.C. and QAVC amplifier stage to the grid of the type 58 tube at point (4) and should appear with normal tube gain at the plate or point (5), also at the diode plates D_1 and D_2 or points (6) and (7) on diagram regardless of whether signal appears at point (3). D_2 is used also to rectify this signal for supplying a negative bias varying with the signal to the control grid of the triode section of the 55 tube. This D.C. voltage should appear between point 9 and the cathode of the type 55 tube. When this bias voltage is small the triode draws appreciable plate current through the common cathode resistor R_4 in the I.F. signal amplifier stage, blocking the tube. When this bias at point (9) becomes high the triode plate current drops to zero and the drop across R_4 becomes normal for proper amplifier action of this tube. Obviously opening switch S_1 will open the plate circuit of the triode making the QAVC inoperative, the set then being controlled by normal A.V.C. action as previously described.

In Fig. 27 is shown a QAVC arrangement as used in the Philco type 16 receiver and is typical of the blocked audio type.

In this arrangement the type 78 QAVC tube is used to control the effective screen voltage applied to the type 77 first audio tube. When the I.F. signal voltage is low, a low bias will be applied at the QAVC grid, point (1), and the tube will tend to draw a high plate current through the 1.0 megohm resistor R_1 which is also common to the screen of the 77 first audio tube causing a high drop across R_1 and lowering the effective voltage available to the first audio screen, thereby making the first audio stage inoperative.

When the I.F. signal voltage is high, a high biasing voltage is applied to the QAVC grid, thereby lowering its plate current as drawn through the resistor R_1 (or in other words lowering its shunting effect) so that the screen voltage at (2) as applied to the first audio returns to the proper value for its normal operation as an audio amplifier. A switch in the cathode circuit of the QAVC tube is provided so that the squelch action may be eliminated if desired. The 10 megohm control R_2 is used to adjust the screen voltage of the QAVC tube, so that the point at which the "squelch" action releases may be varied according to local signal requirements.

Once the circuit action of these QAVC arrangements is understood, servicing then becomes only a problem of measuring the operating voltage conditions of the components involved, which can conveniently and without disturbing the circuit's operation be done with a vacuum tube voltmeter.

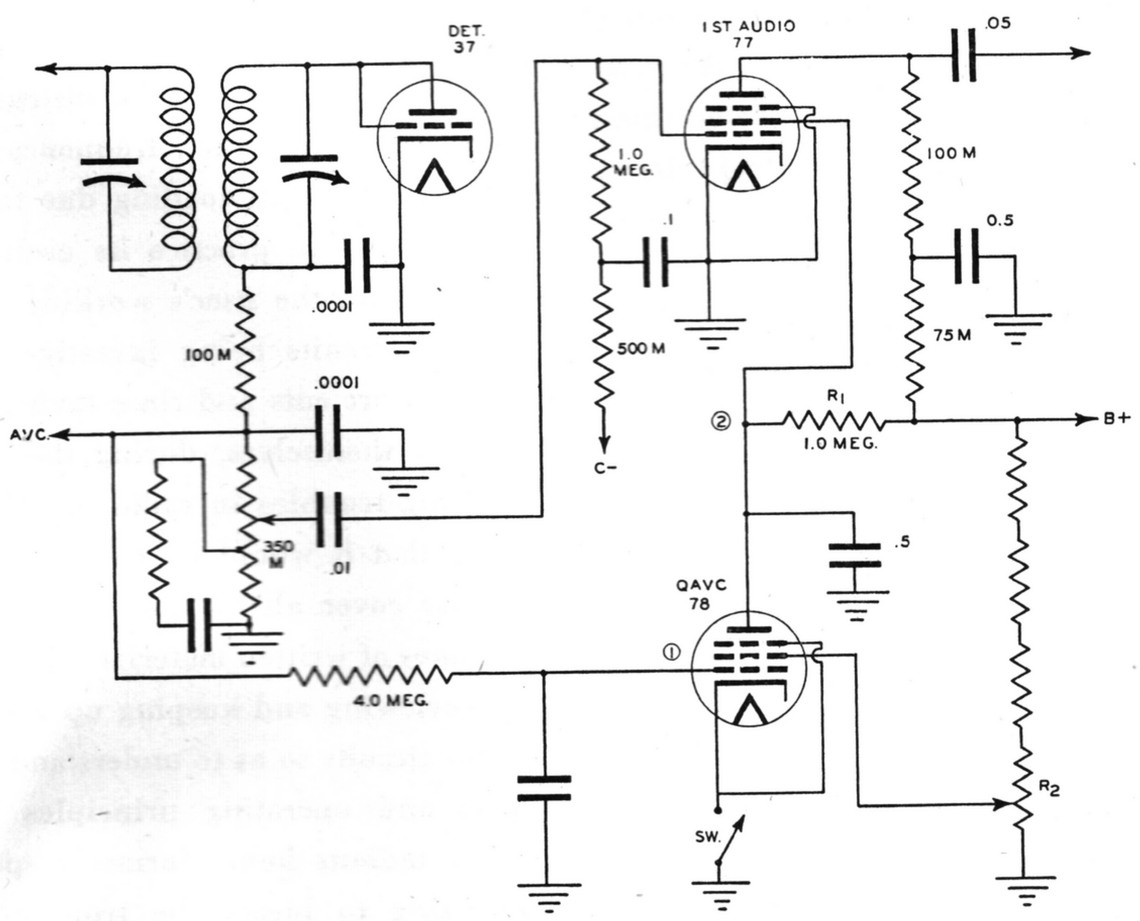

FIG. 27

Automatic Frequency Control Circuits

Modern selective broadcast receivers are frequently mistuned by their users resulting in distortion and poor performance of the receiver. To overcome this operator mistuning error and also to compensate for slight variations in the adjustment of mechanical push button station selecting arrangements A.F.C. has been developed and applied to deluxe type receivers.

A.F.C. functions to vary the frequency of the receiver's oscillator (over a limited range) so that the frequency difference between the local oscillator and the incoming signal will produce the proper I.F. frequency at which the I.F. stages are designed to operate.

To accomplish this a means has been devised for translating frequency deviation of the I.F. signal produced by the local set oscillator's beat with the incoming signal into a control voltage deviation, the magnitude and polarity of which is determined by whether the I.F. signal is above or below the set's resonant I.F. frequency. This is accomplished by means of what is called a discriminator. This control voltage supplied by the discriminator is used to control the frequency of the local set oscillator by means of a frequency control tube caused to act as a variable inductance in shunt with the oscillator tuned circuit, the magnitude of its effective shunting inductance being determined by the control voltage developed at the discriminator.

A basic discriminator circuit is shown in Fig. 28.

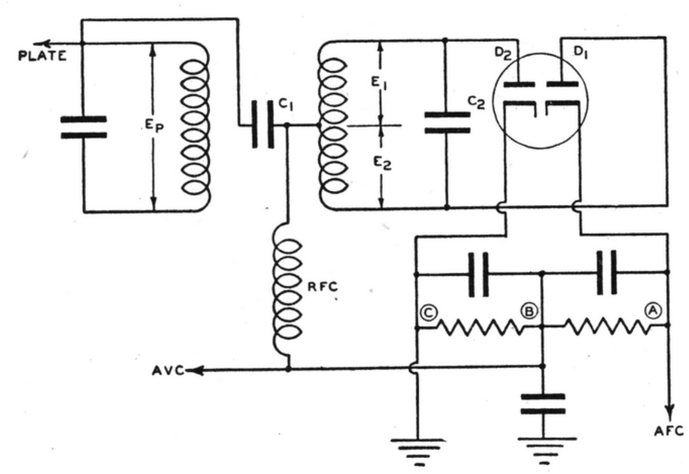

FIG. 28

The I.F. signal voltage E_p appearing across the tuned primary is coupled magnetically to the center tapped secondary producing the induced voltages E_1 and E_2 across each half of the secondary winding. E_p is also coupled by C_1 to the secondary midpoint so that the resultant signal voltage appearing at D_1 or D_2 is the vector sum of the series voltage E_p plus E_1 or E_2. When the I.F. signal is at the resonant frequency of the tuned primary and secondary discriminator transformer circuits the signal voltages appearing at D_1 and D_2 are equal. Therefore equal rectified voltages will appear across AB and BC. However, A will be positive with respect to B and C will be positive with respect to B so that the A.F.C. voltage from A to C or ground will be zero. In other words when the receiver has been correctly tuned so as to produce the resonant I.F. frequency, no A.F.C. voltage is developed, as expected, since no control is necessary when the receiver is properly tuned.

However, when the set is tuned in such a manner as to produce an I.F. frequency above the set's resonant I.F. due to the phase shift of the series voltage E_p and E_1 and E_2 the signal voltage appearing at D_1 will be less than that at D_2 resulting in a negative A.F.C. voltage across points A-C. When the set is tuned such as to produce an I.F. frequency below the set's resonant I.F. the voltage appearing at D_1 will be greater than that at D_2 resulting in a positive A.F.C. voltage across points A-C. This voltage, varying in magnitude and polarity dependent on the incoming I.F. frequency, is applied to the control tube. Fig. 29 is a reproduction of a typical resonance curve of an A.F.C. transformer showing A.F.C. control voltage developed vs. kc. off resonance.

From the above discussion servicing of discriminators with a vacuum tube voltmeter becomes obvious after the circuit action is understood. Most discriminator troubles arise due to improper adjustment, and a vacuum tube voltmeter provides a convenient method of correctly adjusting a discriminator transformer after the signal has been traced to D_1 and D_2 and its rectified D.C. components are established at points A and B. Alignment is conveniently accomplished by connecting a vacuum tube voltmeter from B to ground and adjusting the primary padder C_1 for maximum voltage output when a signal generator supplying the resonant I.F. set frequency is connected back at the 1st detector. Then the vacuum tube voltmeter is connected at A and the secondary padder C_2 is adjusted until the A.F.C. voltage is exactly zero. This adjustment is critical and slight misadjustment in either direction should cause a rapid rise of A.F.C. voltage, its polarity depending on the direction of mistuning as indicated in Fig. 29.

Having established proper discriminator action we shall next see how this A.F.C. voltage is used to vary the frequency of the local set oscillator.

In Fig. 30 is shown a basic oscillator control circuit using a tube as a variable inductance in shunt with the oscillator tuned circuit.

To accomplish its purpose, that is, to provide some way of increasing or decreasing the set's oscillator frequency without changing the setting of the oscillator section of the gang condenser, the control tube is made to act in effect as an inductance in shunt with the oscillator coil inductance, the magnitude of this inductance being determined by the bias on the frequency control tube or by the A.F.C. voltage from the discriminator.

Referring to Fig. 30 the network R_1C_1 connected across the oscillator coil has values such that the resistance of R_1 is greater than the capacitive reactance of C_1, the combination having nearly unity power factor, so that the current through C_1 is nearly in phase with the oscillator voltage. Then since the voltage across a condenser lags its current by 90° it follows that the oscillator voltage as applied to the oscillator control tube grid lags the oscillator voltage across L by 90°. If the tube is properly biased as an amplifier its plate current will be in phase with the grid voltage, therefore its plate current lags the oscillator voltage across L by 90°, causing the tube to act as an effective inductance across L, the condenser C_2 having low impedance and used to isolate the B voltage.

Since the plate current of the control tube draws a lagging current with respect to the oscillator voltage across L and since the plate current can be varied by varying the bias on the grid, we have in effect a variable inductance shunting the oscillator coil, whose magnitude is controlled by the discriminator control voltage. Resistor R_2 and condenser C_4 are used to isolate the oscillator voltage across C_1 from the A.F.C. network.

Here again the vacuum tube voltmeter may be used to measure any of the D.C. control voltages or A.C. signal voltages present, and isolating the trouble becomes a problem of understanding the circuit action.

In conclusion we would like to point out this fact. The uses to which a vacuum tube voltmeter may be applied are limited only by the design of the instrument itself as regards sensitivity, frequency characteristics, and circuit loading due to input capacity, etc. In practice its usefulness also depends on the user's working knowledge of the circuits being investigated and so many short cuts and time saving tests will suggest themselves, during the process of locating troubles in radio or allied equipment that it would be impossible to completely cover all the possibilities in many volumes of written material. The time spent on reviewing and keeping up with modern radio circuits so as to understand their purpose and operating principles will save many tedious hours formerly spent in attempting to locate the trouble by more indirect methods.

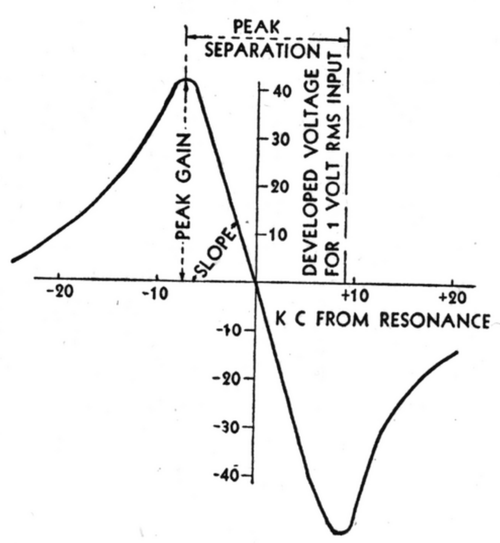

FIG. 29

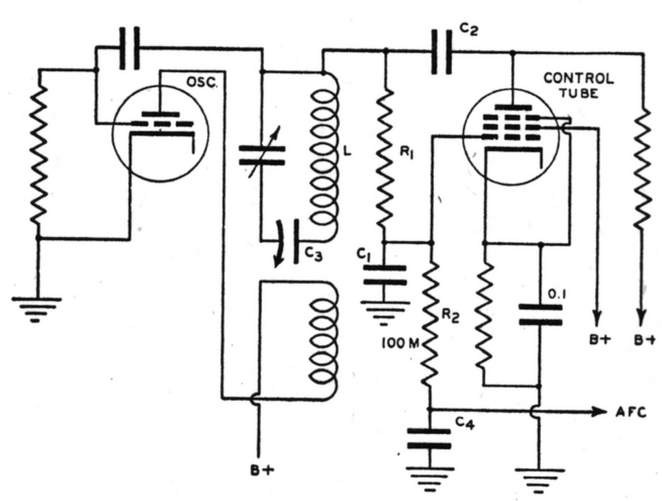

FIG. 30

• *Section* 12

THE MYE TECHNICAL MANUAL

Useful Servicing Information

P.R. MALLORY & CO. Inc.
MALLORY

USEFUL SERVICING INFORMATION

To facilitate use of the servicing information in this section, the following table of contents is included to provide a faster reference source than the complete book index appearing at the back of the book.

PAGE

1. The application of Ohm's law in power supply and divider systems 346, 347, 348
2. Methods for calculating voltmeter multipliers and milliammeter shunts 348, 349, 350
3. Power Transformer—Design and Repair . . 351, 352, 353
4. RMA approved color coding for following radio components:
   a. Power transformer leads 354
   b. Audio transformer leads 354
   c. Intermediate frequency (I.F.) transformer leads . 354
   d. Dynamic speaker wiring 355
   e. Battery cables 356
5. Standard resistor color designations 360
6. Standard mica condenser color code 356
7. Reference tables to simplify commonly required calculations:
   a. Reactance (LC) charts 356, 357, 358, 359
   b. Inductance of single layer coils 361
   c. Copper wire table 353
8. Automobile battery ground chart 363
9. Ballast resistor wiring chart 362
10. Miscellaneous servicing formulas 363, 364
11. Circuit constant tables for resistance-capacity coupled amplifiers 365, 366, 367, 368

Application of Ohm's Law in Power Supply Systems

Ohm's law (and its derivatives) is without doubt the most widely used formula in radio service work. It is accepted as the basic principle for all forms of electrical engineering. In view of this fact it is felt that a thorough discussion is in order, although a large portion of those engaged in service work are already familiar with its use.

Ohm's law may be interpreted as in any of three expressions that follow:

1. The current flowing in any circuit is equal to the potential (e.m.f.) applied to the circuit, divided by the resistance of the circuit, or:

$$I \text{ (current)} = \frac{E \text{ (potential)}}{R \text{ (resistance)}}$$

2. The amount of potential (e.m.f.) required to maintain a specified current flow in a circuit in which the resistance is known, is equal to the product of the current flow and the resistance.

$$E \text{ (potential)} = I \text{ (current)} \times R \text{ (resistance)}$$

3. The value of the resistance required to maintain a given current flow with a known voltage (potential), is equal to the voltage divided by the current flow.

$$R \text{ (resistance)} = \frac{E \text{ (potential)}}{I \text{ (current)}}$$

Fig. 1 shows illustrations for each of the above formulas.

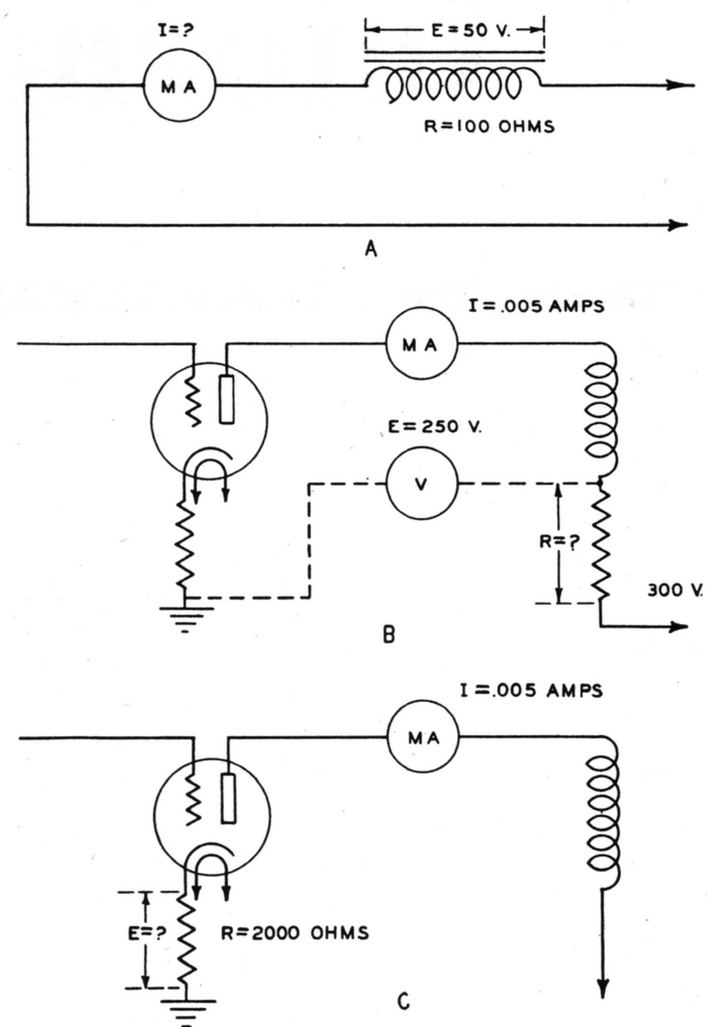

FIGURE 1

The first expression, $I = \frac{E}{R}$, is applied in Fig. 1A. $I = \frac{50}{100}$, and solving; $I = .5$ amp.

In the third expression, $R = \frac{E}{I}$, shown in Fig. 1B, we substitute and solve; $R = \frac{50}{.005}$ or 10,000 ohms.

The second expression $E = IR$ is demonstrated by Fig. 1C where $E = .005 \times 2{,}000$ or 10 volts.

In all of the above formulas potential (E) is expressed in volts, resistance (R) in ohms, and current (I) in amperes. If the current is known or measured in terms of milliamperes it may be converted to amperes by dividing by 1,000 or by moving the decimal point three places to the left, i.e., 50 milliamperes equal .050 amperes.

To summarize, one of the simplest ways of applying these formulas is by using the expression $\frac{E}{I \times R}$. To use, simply cover the unknown or the symbol designating the desired value; thus, to find voltage cover E and the answer is, multiply current by resistance.

It is often necessary to know the proper wattage rating for a replacement resistor or a resistor in experimental construction. The methods for calculating this requirement are derived from Ohm's law.

Since Ohm's law gives the relationship between voltage, current, and resistance, it is possible to express the dissipated heat in terms of any two constants of the circuit. When the voltage across a resistor and the current passing through it are known, the power dissipated in the resistor may be computed as follows:

$$E \times I = W$$

Example: A resistor having a potential of 20 volts across it, and a current of 2 amperes

flowing through it, would be dissipating 40 watts of power.

$$E\ (20) \times I\ (2) = W\ (40)$$

When the resistance value and the voltage across the resistance is known, the dissipation is computed in the following manner:

$$\frac{E^2}{R} = W$$

Example: A resistor of 10 ohms having a potential of 20 volts across it would dissipate 40 watts of power.

$$\frac{E^2\ (400)}{R\ (10)} = W\ (40)$$

When the resistance value and the current flowing through it is known, the computation is:

$$I^2 \times R = W$$

Example: A resistor of 10 ohms having a current of 2 amperes flowing through it would be dissipating 40 watts of power.

$$I^2\ (4) \times R\ (10) = W\ (40)$$

One example of the use to which the formulas thus far described may be put, is illustrated in Fig. 2. In many cases it is desired to obtain a small current at a constant voltage. This may be accomplished by connecting a fixed resistor across the output of a power supply, and circulating enough current through this resistor so that any fluctuations in load (either across the whole resistor, or across a section of it) do not affect the voltage of the supply source.

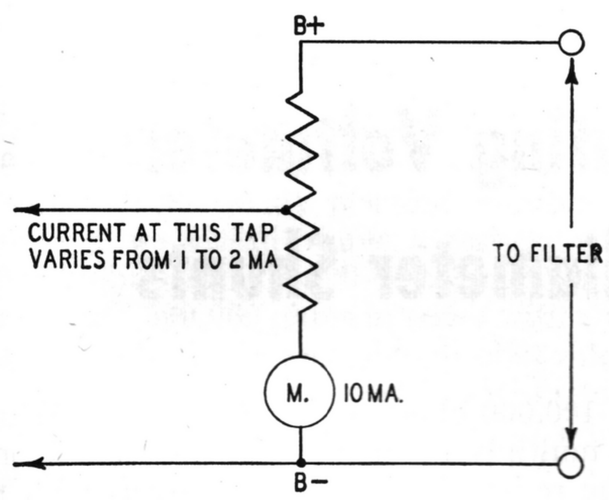

FIGURE 2

If a current of 10 milliamperes is passed through a resistor as shown in Fig. 2, and if the current at a certain tap varies from 1 milliampere to 2 milliamperes, it is obvious that this small current flowing through the resistor is not going to change the voltage appreciably. An additional advantage of a bleeder is that it connects a steady load across the power supply at all times and tends to keep the voltage on the filter condensers at a safe value during the period in which the tubes are heating up. In usual bleeder circuit design, the bleeder current is approximately 10% of the total current drawn from the power supply. If a voltage of 250 volts is available at the output of a filter, and the load of the various circuits is 100 milliamperes, the bleeder resistor should draw 10 milliamperes, or 10% of 100. Since the voltage across it is 250 volts, the value of resistance is easily calculated by Ohm's law. That is, dividing 250 volts by .01 amperes (10 milliamperes), gives a value of 25,000 ohms. The wattage this resistor must be capable of dissipating is 250 × .01 amperes, or 2½ watts. Where greater stability is required, the bleeder current may be as high as 25% of the total current.

When several values of voltage are required, the bleeder is tapped at several points. If the current drawn at any one of these taps is greater than a small proportion of the bleeder current (in this case 10 milliamperes) then the additional current must be considered in determining the wattage of the resistor.

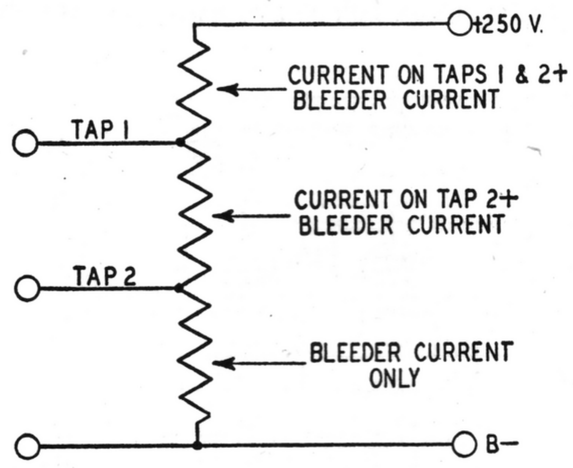

FIGURE 3

Let us consider a bleeder circuit such as shown in Fig. 3. The section of the bleeder resistor between the 250-volt B plus lead and tap 1 must be capable of carrying not only the current drawn by tap 1 and the current drawn by tap 2, but also the bleeder current of 10 milliamperes which circulates through the entire bleeder resistance. If we desire a bleeder current of 10 milliamperes, while tap 1 must supply 20 milliamperes and tap 2, 5 milliamperes, then the section between the B plus 250 volts and tap 1 must carry 35 milliamperes. If the voltage required at tap 1 is 150 volts, then the voltage drop in the bleed resistor between B plus and tap 1 must be 250 − 150, or 100 volts.

The resistance value will therefore be 100 divided by .035 amperes (35 milliamperes), or 2860 ohms. The wattage rating of this section of the bleeder should be 100 × .035 or 3.5 watts. The section between tap 1 and tap 2 must carry the bleeder current of 10 milliamperes plus the 5 milliamperes drawn by tap 2 or 15 milliamperes total. If the voltage at tap 2 must be 90 volts, there will have to be a drop of 150 − 90, or 60 volts in this section of the bleeder. The resistance of this portion therefore will be 60 divided by .015 or 4,000 ohms. The wattage required of this section will be 60 × .015 (E × I), or .9 watts. The remaining portion of the bleeder resistor will carry only the 10 milliampere bleeder current and will have a resistance of 90 divided by .01 or 9,000 ohms with a wattage capacity of .9 watts. The wattage of the total bleeder resistance would be calculated by assuming that 35 milliamperes flowed through the entire resistance, that is $(2860 + 4000 + 9000) \times (.035)^2$, or 19.4 watts. **The important point in bleeder design is that the wattage of the unit should be chosen on the basis of the maximum current which flows through any section of it.**

Up to this point we have dealt only with single resistors or resistances in series, although mechanically a single unit. The general rule for resistors in series is that the total resistance is equal to the sum of all the resistors in the circuit. Expressed as a formula:

$$R\ (\text{effective}) = R_1 + R_2 + R_3, \text{ etc.}$$

Parallel Resistors

Many circuits have combinations of resistors in parallel, and the current path is divided through two or more resistors. If the numerical values of the resistors are equal, then the effective resistance in the circuit may be obtained from the formula:

$$R\ (\text{eff.}) = \frac{R}{N}$$

Where R is the value of one of the equal value resistors and N is the number of resistors in the circuit.

As an example, suppose that a circuit contains three resistors in parallel, as in Fig. 4. As shown, each of the resistors has a value of 900 ohms, so, by using the formula and substituting:

$$R\ (\text{eff.}) = \frac{900}{3} = 300 \text{ ohms}$$

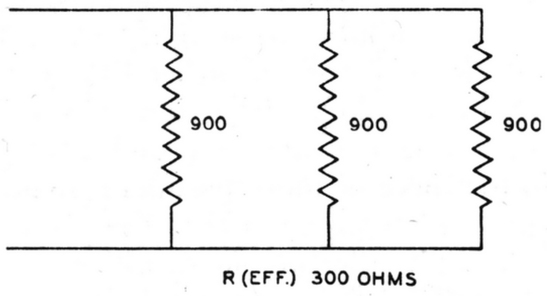

FIGURE 4

The calculation of resistors of equal value in parallel is very simple as shown above, but it should be remembered that this formula applies only when the resistors are equal in value.

In instances where we have resistors of unequal value in parallel we must use another method to compute the effective resistance in the circuit. In the event that there are only two resistors in the circuit we can use the formula:

$$R\ (\text{eff.}) = \frac{R_1 \times R_2}{R_1 + R_2}$$

Fig. 5 gives an example of this type calculation. Here we have resistances of 20 ohms and 10 ohms in parallel, and solving we find that:

$$R\ (\text{eff.}) = \frac{20 \times 10}{20 + 10} = \frac{200}{30} = 6.6 \text{ ohms}$$

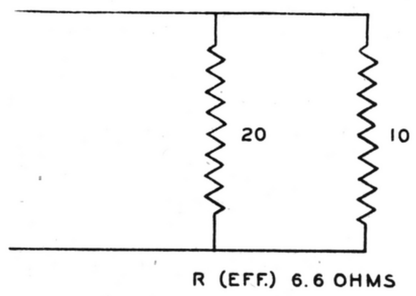

FIGURE 5

In applications where we have more than two resistors in the circuit and they are of

unequal value the solution must be found by use of the formula:

$$R\ (\text{eff.}) = \frac{1}{\frac{1}{R_1} + \frac{1}{R_2} + \frac{1}{R_3}\ \text{etc.}}$$

An example of this formula calculation is illustrated in Fig. 6.

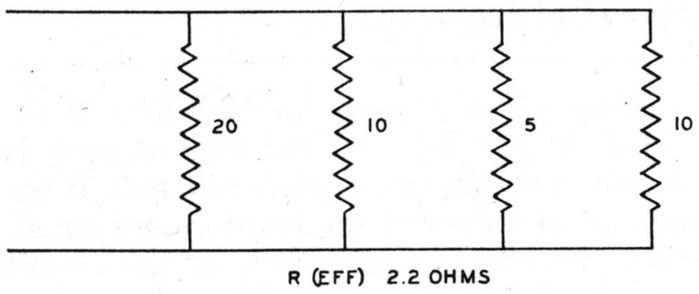

FIGURE 6

The resistances in the circuit are 20 ohms, 10 ohms, 5 ohms, and 10 ohms. Substituting in the formula we have:

$$R\ (\text{eff.}) = \frac{1}{\frac{1}{20} + \frac{1}{10} + \frac{1}{5} + \frac{1}{10}} =$$

$$\frac{1}{.05 + .1 + .2 + .1} = \frac{1}{.45} = 2.2 \text{ ohms}$$

The complete solution of Fig. 6 has been carried out so that any one desiring to use this method of calculation will have a practical example to follow. Although charts have long been available to simplify the calculation of two resistors of either like or unlike values in parallel, there has never been, within our knowledge, any such tables prepared for three or more parallel resistors. As a result, we recommend that the serviceman make himself thoroughly familiar with the procedure for solving such problems.

Resistor Networks

A large number of circuits may be encountered in which resistances are in series and in parallel. The solution of the effective value of resistance is obtained by breaking up the circuit into its local circuits, solving each portion consisting of parallel circuits, and then resolving them into simple series circuits. Fig. 7 is an example along these lines.

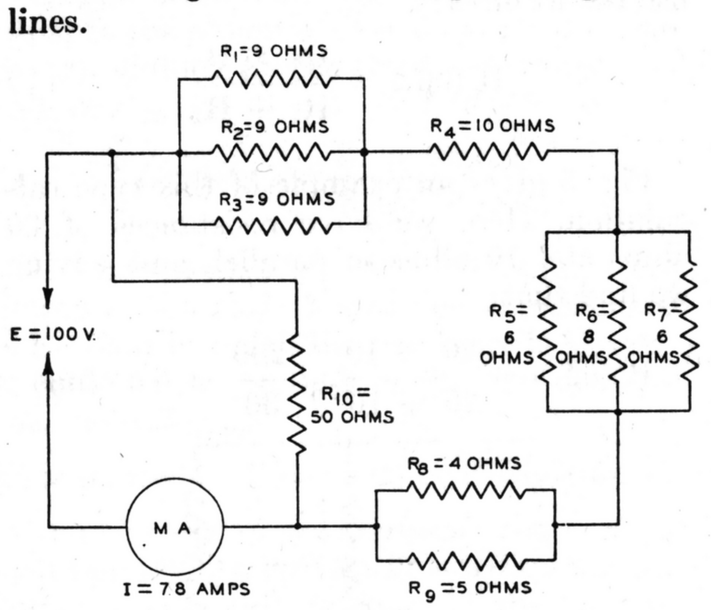

FIGURE 7

The first step is to solve all of the branch circuits. Circuit R_1, R_2, R_3, has an effective resistance of 3 ohms. Circuit R_5, R_6, R_7 has a resistance of 2.2 ohms.

Circuit R_8, R_9 has a resistance of 2.2 ohms.

As the above parallel circuits are in series with resistor R_4, we find the effective value of resistance by adding 10, 3, 2.2, and 2.2 together. This totals 17.4 ohms.

Resistor R_{10} is connected across the voltage supply, and the effective value of the resistance network R_1 and R_9 is, in turn, connected across R_{10}. Thus R_{10} is in parallel to the 17.4 ohms resistance of the network.

Solving for parallel circuits 50 × 17.4/50 plus 17.4 we have the effective total circuit resistance of 12.8 ohms.

Knowing that the voltage applied across this network is 100 volts, and that the effective resistance is 12.8 ohms, then 100/12.8 is 7.8 amperes, or the total current flowing in the circuit.

The reader may think that a problem of this type can hardly occur, but if he will study the circuit of Fig. 8 he will see the need for some practical knowledge on the solution of similar problems. The circuit of Fig. 8 is a receiver breakdown circuit of the RCA Radiola 80. Note that there are many small series circuits and that they are all in parallel across the power supply which takes the place of the Battery E in all the problems set out above.

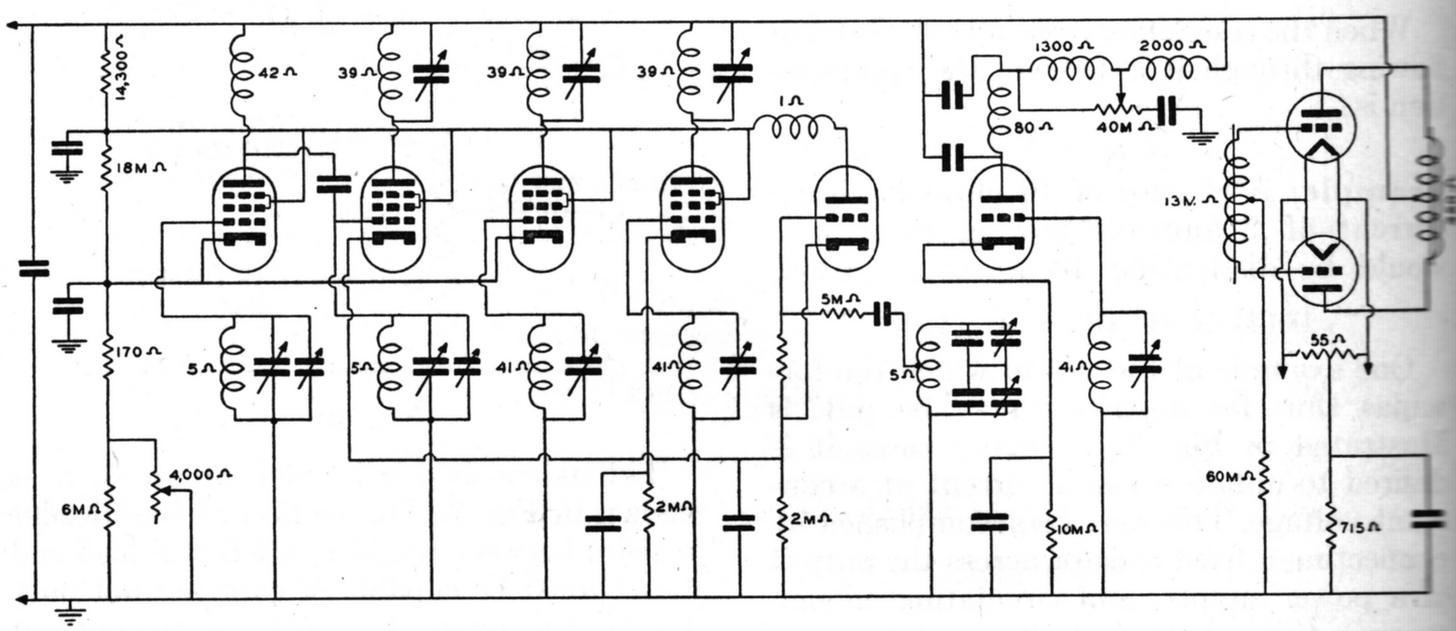

FIGURE 8

Methods for Calculating Voltmeter Multipliers and Milliameter Shunts

Voltmeter Multipliers

When extending the range of a DC voltmeter, the resistance which must be connected in series with the meter is easily calculated; provided that either the internal resistance of the voltmeter in ohms, or the resistance in ohms per volt is known. If the resistance is given in ohms per volt, the total resistance of the voltmeter may be found by multiplying the ohms per volt by the scale reading of the meter.

If it is desired to extend the range of the meter by 10 times, the resistance of the voltmeter is multiplied by 10 − 1, or 9. As a specific example, let us assume that the voltmeter in question has a sensitivity of 1000 ohms per volt and a full scale deflection of 100 volts. It is desired to increase the range to 500 volts. The range, therefore, is to be increased by 5 or

$$\frac{(500)}{(100)}$$

The resistance of the voltmeter is 1000×100, or 100,000 ohms. It is necessary, therefore, to multiply 100,000 by one less than 5, or 4. The resistance necessary in series with the voltmeter is 400,000 ohms. In terms of a simple formula:

$$R_s = R_m \times \frac{V_2}{V_1} - 1$$

where R_m is the resistance of the voltmeter in ohms, or the number of ohms per volt times the maximum scale reading of the voltmeter prior to the change. V_1 is the original range of the voltmeter; V_2 is the new maximum range desired and R_s the fixed external resistor which must be connected in the circuit. The wattage required of this resistor is generally less than 1½ watts, which is the rating of the average precision resistor. In special cases where very large meters are used, whose sensitivity is very low, the wattage dissipated in the external precision resistor may be greater than 1.5 watts. In this case two or more precision resistors should be connected in series, the value of each resistor being the resistance required divided by the number used in series. The wattage dissipated in the external resistors is calculated by dividing the maxi-

mum range of the meter squared $(V_2)^2$, by the sum of the external resistors plus the resistance of the meter, that is, $(R_m - R_s)$.

Figure 9 shows a switching arrangement which provides a choice of several extension ranges. For illustration let us use the voltmeter mentioned in the preceding paragraph. This has a range of 100 volts and a resistance of 100,000 ohms. In Figure 9 this range is available at the number 1 position

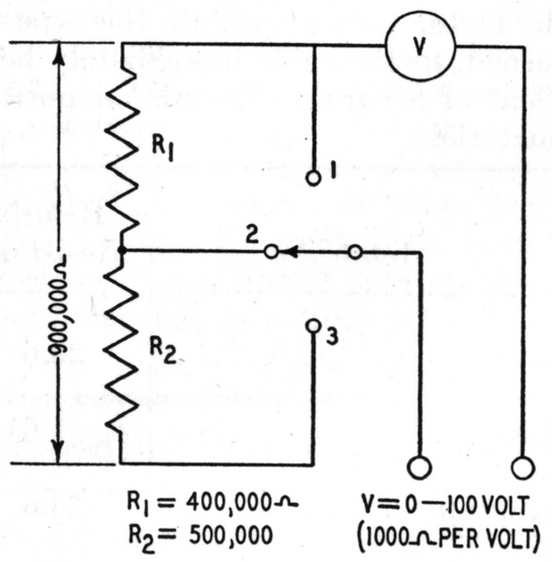

FIGURE 9

of the switch. If we desire a 500-volt range at the number 2 position, the multiplier resistance may be calculated by using the formula:

$$R_s = R_m(100{,}000) \times \left(\frac{V_2(500)}{V_1(100)} - 1\right) = 400{,}000 \text{ ohms}$$

In a similar manner we arrive at a value of 900,000 ohms as the correct multiplier for a 1000-volt range at position number 3. However, we already have a resistance of 400,000 ohms for the 500-volt range, so we merely add 500,000 ohms in series with that resistor to obtain our second multiplier value. An accuracy of 1% is generally satisfactory for these resistors unless a very high precision meter is used. The general types of meters encountered in service work are only accurate to ±2% so that it is useless and wasteful to use a resistor with an accuracy of better than ±1%.

To Change Over a DC Milliameter to a DC Voltmeter

Often it is necessary to convert a DC milliameter to a voltmeter, either permanently or by means of a switching arrangement, so as to use the same instrument for the combined purposes of reading current and voltage. Since the internal resistance of most milliameters is very low (in comparison to the external multiplier which must be connected when making this change), it can be neglected without serious error. The resistance which is to be connected in series with the milliameter is calculated by dividing the voltage range which is desired by the current range of the milliameter expressed in amperes. If the maximum current reading on the milliameter scale is given in milliamperes, then the voltage range desired is multiplied by 1000 and then divided by the current range of the milliameter in milliamperes.

Expressed by a simple formula, this is

$$R_s = \frac{V \times 1000}{I_m}$$

where V is the voltage range desired, I_m the current in milliamperes necessary to give the meter a full scale deflection before the change, and R_s the series resistance required in ohms.

Extending Milliameter Ranges

To extend the range of a DC milliameter when the resistance of the milliameter is known, the shunt resistor which must be connected across the terminals of the meter is calculated very simply by dividing the resistance of the meter by (K-1) where K is equal to the ratio of the desired maximum reading to the original reading of the meter. This is given as

$$R_{sh} = \frac{R_m}{(K - 1)} \text{ when} \qquad \text{I}$$

R_m = resistance of meter

$$K = \frac{I_2 = \text{range desired in milliamperes}}{I = \text{original range in milliamperes}}$$

R_{sh} = value of shunt resistor

A prepared table of milliameter shunt and multiplier resistance values for popularly used meters is available under Fig. 12.

If the resistance of the meter is unknown, it may be measured by the half deflection method. Referring to Figure 10, a variable high resistance R_1 is connected in series with the meter, and the meter adjusted to exactly full scale deflection. R_2 is then connected in the circuit and adjusted to make the meter read half scale. R_2 is then equal to the meter resistance and may be measured by any of the usual methods. Never attempt to measure the meter itself by either the ohmmeter or the bridge method.

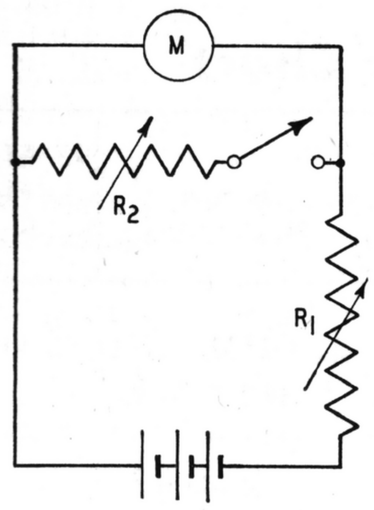

FIGURE 10

It will usually be found advisable, when making a multi-range milliameter, to increase the meter resistance 5 to 10 times. This may be done by connecting a series resistor outside the meter. The shunt is then figured using as the meter resistance, the combined resistances of the meter and the series resistor. The series resistor serves two purposes. First, it allows the shunt to be of more reasonable value, thus decreasing errors due to contact resistance or to slight miscalculation. Second, in case of momentary overload, the resistor acts as a ballast slowing down the meter action and in many cases saving a meter which might otherwise be ruined.

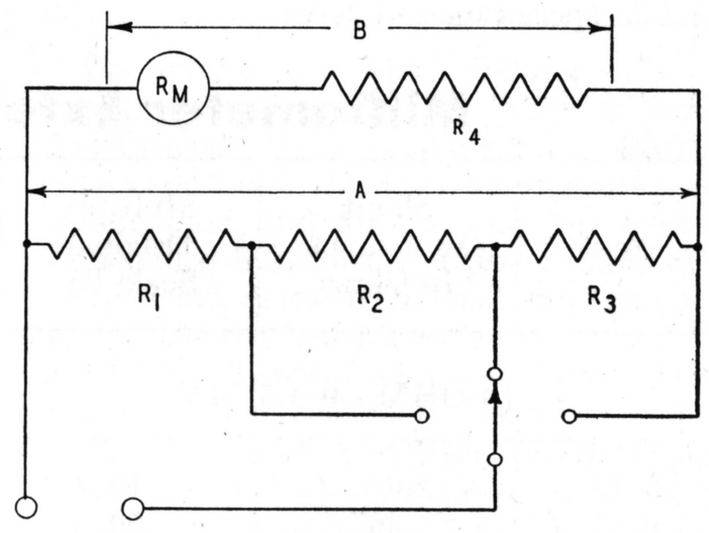

FIGURE 11

Probably the best multi-range milliameter circuit is a modification of the "Universal shunt" type. This is shown in Figure 11. This circuit has several advantages over the usual circuit. First, contact resistance of the switch has absolutely no effect on the accuracy of the meter. The usual circuit has the contact resistance in series with the shunt and thus makes the total shunt resistance inaccurate. If the switch contact should happen to be defective in the usual circuit, the meter would be ruined. Second, with the usual circuit the switch can not be operated while the meter is in the circuit. With the universal shunt arrangement the switch may be operated at any time without damage to the meter.

Though at first glance it would seem to be more difficult to calculate the resistance values for a universal shunt, actually it is quite simple. First we add the series resistor R4 (Figure 11) to bring the meter plus series resistance to a value of approximately 200 ohms. The total shunt resistance is now figured by formula I to make the meter read full scale for the first desired range (5 or 10 milliamperes). The other resistances are figured by the formula as shown in Figure 11:

$$X = \frac{A + B}{K} \qquad \text{II}$$

where $A = R_1 + R_2 + R_3$ (the total shunt resistance) and $B = R_m$ (the internal resistance of the meter) $+ R_4$ (the external series resistor), and K = the desired range divided by the fundamental range of the meter.

As an example, assume that we have a 0–1 ma. meter of 50 ohms resistance, and that we want a multi-range meter giving ranges of 0–5, 0–50, and 0–250 milliamperes. Referring to Fig. 11 we first add R_4 (150 ohms) thus bringing total B ($R_m + R_4$) resistance to 200 ohms. Our next step is to find the total shunt resistance. For this we will use formula I and solve for the lowest

desired range. For a five milliampere range we would have

$$\frac{B(200)}{K(5) - 1} = A(50).$$

Now we figure the next range using formula II. For a range of fifty milliamperes we will have

$$X\ (R_1 + R_2) = \frac{A(50) + B(200)}{K(50)} = 5.$$

Since $R_1 + R_2 + R_3 = 50$, R_3 will be 45 ohms. Using the same formula for the 0–250 milliampere range we have

$$X\ (R_1) = \frac{A(50) + B(200)}{K(250)} = 1.$$

Since $R_1 + R_2$ was shown to be 5 ohms and R_1 is one ohm, it is obvious that R_2 is equal to 4 ohms. This completes the computation.

This method has one advantage over the ordinary calculations which lies in the fact that division is usually made by an even number rather than by odd numbers such as 49 and 249 as would be necessary in the usual shunt formulas.

Milliameter Extension Range Chart

Scale	Shunt Resistance In Ohms	Multiply Original Scale By
18 OHM—0–1.5 MA		
0–15	2.0	10
0–75	.367	50
0–150	.181	100
0–750	.036	500
27 OHM—0–1 MA		
0–10	3.0	10
0–50	0.551	50
0–100	0.2727	100
0–500	0.0541	500
27 OHM—0–1.5 MA		
0–15	3.0	10
0–75	0.551	50
0–150	0.2727	100
0–750	.0541	500
33 OHM—0–1 MA		
0–10	3.66	10
0–50	.673	50
0–100	.333	100
0–500	.0661	500

Scale	Shunt Resistance In Ohms	Multiply Original Scale By
35 OHM—0–1.5 MA		
0–15	3.89	10
0–75	0.714	50
0–150	0.354	100
0–750	.0701	500
50 OHM—0–1 MA		
0–10	5.55	10
0–50	1.024	50
0–100	.505	100
0–500	.1002	500
100 OHM—0–1 MA		
0–10	11.1	10
0–50	2.04	50
0–100	1.01	100
0–500	.20	500
105 OHM—0–1 MA		
0–10	11.66	10
0–50	2.142	50
0–100	1.06	100
0–500	.21	500

Voltmeter Multiplier Chart

Scale	Series Resistance	Multiply Original Scale By
27 OHM, 33 OHM, 50 OHM, 100 OHM, AND 105 OHM—0–1 MA		
0–10	10,000	10
0–50	50,000	50
0–100	100,000	100
0–250	250,000	250
0–500	500,000	500
0–1000	1,000,000	1000

Scale	Series Resistance	Multiply Original Scale By
18 OHM, 27 OHM, AND 35 OHM—0–1.5 MA		
0–15	10,000	10
0–150	100,000	100
0–300	200,000	200
0–450	300,000	300
0–600	400,000	400
0–750	500,000	500

FIGURE 12

Resistivity Table

Relative resistance (copper = 1) 20°C. To use this table in determining the resistance of a given type conductor, first, find the resistance value of the same gauge copper wire (see page) 353, and then multiply by the factor shown opposite the type wire concerned, in the table immediately below. (Percent of accuracy depends on purity of the material.)

Metal	Relative Resistance
Advance	28.6
Aluminum	1.65
Constantan	28.6
Brass (Annealed)	4.08
Brass (Hard Drawn)	4.78
Cadmium	4.43
Climax	50.7
Copper (Annealed)	1.00
Copper (Hard Drawn)	1.033
Excello	53.7
German Silver	19.25
Gold	1.423
Iron (Pure)	5.83
Lead	12.84
Manganin	25.7
Mercury	55.9
Molybdenum	3.325
Monel	24.5
Nichrome	58.3
Nickel	4.55
Phosphor Bronze	4.55
Platinum	5.83
Silver	.927
Steel (Piano Wire)	6.84
Tin	6.7
Tungsten (Drawn)	3.27
Zinc	3.38

Power Transformers—Designing and Rebuilding

● Under normal conditions there is little justification for the serviceman to utilize his time for winding or rebuilding power transformers, since complete transformers correctly designed by reliable manufacturers are available on open market for little more than the cost of the raw materials.

However under war conditions, transformers may be difficult or impossible to secure. Also, it is patriotic to conserve raw materials. The serviceman who understands the process of transformer designing can frequently effect a prompt repair on a damaged receiver, P.A. system, or other electronic device, whereas his competitor, lacking this knowledge, must either pass up the job or effect a delivery at a much later time.

Rebuilding Power Transformers

Transformer Failures—In general, reliable transformers are used in apparatus manufactured by recognized companies, and failure can usually be traced to causes other than faulty design.

The two most likely causes of transformer failure are:

1. Overload, usually caused by the failure of some associated component, such as a shorted rectifier tube, a defective filter condenser, etc., placing an abnormal load on one of the windings.
2. Moisture-absorption, causing either failure of insulation, or corrosion and opening of a winding.

In almost every case it is usually possible to salvage the primary and filament windings of the transformer so that the wire can be reused; although the salvage of the smaller gauge wire used in the high voltage secondary is more doubtful.

Space Factor—When endeavoring to rewind burned-out power transformers special attention should be given to space factor, since the home-built coil will generally have a greater physical size than the original equipment coil. If the original coil was a squeeze fit for the core window, it will be better to create a new transformer design, using a core of greater physical dimensions, than it would be to endeavor to duplicate the original which was probably wound with an automatic winding machine capable of producing a coil having little wasted space.

When salvaging wire from a defective or burned-out transformer it is an excellent idea to count the turns used on one winding, as this will indicate the number of turns per volt which can be employed for any subsequent winding which might be installed on the core. Thus if a transformer employs 22 turns on a 6.3 volt winding, a ratio of 3½ turns per volt may be used for any new windings it may be desired to install on this particular transformer core, provided that the frequency of the supply voltage remains the same.

Impregnation—After winding the coil, and anchoring the leads, the coil should be impregnated to make it impervious to moisture, so that corrosion or destructive electrolysis will not occur.

Before impregnation, the coil should be thoroughly heat-dried to drive out the moisture and to provide the maximum fluidity of the impregnant when the coil is dipped. The drying-out process can be accomplished by placing the coil in a common household oven heated to a temperature not exceeding 200 degrees F. for a sufficient length of time to permit the innermost parts of the coil to come up to oven temperature. Naturally, the larger the coil, the longer the heating time required.

Regular transformer varnishes are available, and in small quantities can usually be purchased from local motor repair shops. Some of these varnishes require baking for hardening, and details of the baking operation can be obtained from the supplier. Lacking these, a satisfactory job can be accomplished using ordinary clear varnish of good quality.

Audio transformer and choke coils are frequently impregnated with mixtures of beeswax and rosin, or beeswax, paraffine and rosin, since such mixtures do not get brittle when cold and possess a reasonable degree of fluidity when hot. However, wax impregnation is not ordinarily used for power transformer coils because the internally generated heat would cause softening.

Under no circumstances, attempt to use shellac as an impregnant. Shellac is a gum that is dissolved in alcohol, and almost always carries a percentage of water.

Transformer manufacturers employ vacuum impregnation, wherein the coils are submerged in the impregnant under a vacuum which releases any air trapped between the turns of the winding and which insures that the impregnant will reach the innermost portions of the coil.

However, for emergency, the following simple method has proven to be satisfactory. Immerse the coil vertically in a pail of varnish. Allow it to soak for a few minutes, then suspend it above the pail until the coil drains. Then repeat the process three or four times before hanging the coil up to dry.

In most cases it will be desirable to complete the winding of the coil before impregnating. If an attempt is made to impregnate the coil layer for layer as it is wound, it will be found that owing to the lubricating effect of the varnish, and turns will have an unpleasant tendency to slip off the ends of the coil.

In lieu of "spaghetti" or varnished cambric tubing, common shoe laces can be substituted for coil lead insulation, if the shoe lacings are coated with varnish and allowed to dry.

The shoe-lace substitution suggested in the preceding paragraph provides adequate insulation for low-voltage filament leads, and will serve as a mechanical protection for the finer wires of the primary and high voltage secondary. However, because of its coarse weave, no reliance should be placed on the shoe lacing as actual electrical insulation for the higher voltage wires.

How to Design Power Transformers

The information which follows will tell exactly how to proceed in designing small transformers. By making certain assumptions as outlined, the process becomes greatly simplified, and while it may be possible for a skilled transformer engineer to provide a somewhat more economical and compact design, the method presented will result in a satisfactorily performing transformer if the instructions are carefully followed.

The design of a reliable power transformer, having high efficiency, requires fairly elaborate calculations, and to take into account the d.c. which flows in a transformer secondary when a half-wave rectifier is used, some interesting equations have been derived.

A simple approximate-design method will be given, for the construction of single-phase low-powered transformers up to 180 volt-amp., or 180 watts for approximately unity power factors. This design is especially suited to transformers which supply a full-wave rectifier and filament energy to an a.c. powered radio receiver, three factors making it possible to secure a satisfactory transformer without complicated design methods, these factors being:

1. There is no urgent need for high efficiency. An 80 per cent efficient transformer which takes 60 watts to supply 48 output watts is fairly satisfactory, if it can radiate the heat which it generates.

2. These transformers are operated at a fairly constant load. This improves the maintenance of the various output voltages as each secondary winding will have a constant *IR* drop.

3. The load on the transformer secondary is nearly of unity power factor. The filament power load is essentially a resistance load, with unity power factor. The current supplied to the filter has slightly less than unity power factor, but this can be disregarded in low-powered transformers. The indirect heated receiving tubes, such as the 227 requires less than half as much d.c. power in their plate and grid circuits, as that which is needed to heat their cathodes. This would mean a unity power-factor heater supply and (assuming a series voltage divider) less than half as many additional watts for plate and grid supply, at a lower power factor. It is true that a power tube, such as 250 at its maximum rating, uses slightly over three times the wattage in its $B + C$ circuit than in its filament. It is rare, however, to have more than two power tubes in a receiver, and the assumption that the power factor of the secondary is unity is usually not over 20

per cent off. This means that the wire of the high-voltage secondary and of the primary should be increased to allow for this added current.

Small Transformer Details—Economy in a transformer is secured when the winding encloses a maximum of core area with a minimum of wire, and the magnetic path should be as short as possible.

The core form of a small transformer can be of several shapes, but it is usual to use standard punchings shaped like capital letter E's. As a rule, two punchings are used, one having longer legs than the other so that the magnetic circuit "breaks joints" in stacking the iron. Another convention usually followed in small transformers is the use of a single-winding form, all secondaries and primary being on the middle leg of the E core.

The spool form is usually an insulating tube, and side pieces may be fitted on which terminals are placed, or, if the coil is to be machine wound with interwoven cotton, the side pieces can be omitted, and flexible leads provided.

Ten Steps in Designing a Small Power Transformer—1. *Determine the Volts and Amperes Needed for Each Secondary.*

a. Find the total maximum secondary watts $= W_s = E_1I_1 + E_2I_2 + \cdots$ (where $E \times I$ refers to the wattage in each secondary winding)

b. Find the total watts needed for primary (W_p)
Assuming 90 per cent efficiency $W_p = W_s/0.9$. Where W_s = Secondary watts.

c. Find primary amperes assuming 90 per cent power factor

$$I_p = \frac{W_p}{E_p \times 0.9} = \frac{W_s}{0.81E_p}$$

where E_p = 110 volts, $I_p = W_s/89.1$ amp.

2. *Size of Wire.* Knowing the current for each winding, the wire size is determined by the circular mils per ampere which it is desired to use. A safe rule is to use 1,000 cir. mils per ampere for transformers under 50 watts, and 1,500 cir. mils per ampere for higher powers—however, most commercial designs use 800 cir. mils per ampere.

3. *Core Considerations.* A curve showing core areas for different powers is Figure "A" which shows the area for 40 watts to be 1 sq. in., 70 watts, 1.5 sq. in., 120 watts, 2 sq. in. The area of the core is the same as the inside dimensions of the spool, making a 10 per cent allowance for stacking; for example, a spool 1 by 2 in. inside would enclose 2 sq. in., but, allowing for a 10 per cent loss, only 90 per cent or $0.9 \times 2 = 1.8$ sq. in. is the net core area. The core area is needed to determine the turns per volt.

4. *Core-Loss and Induction.* The flux density at which the core is to be worked determines the iron (core) loss. Figure "B" gives several curves of different core materials, watts per pound being plotted against flux densities in kilolines per square inch. Sixty-five kilolines per square inch is an average value of the induction. The making of a curve such as Figure "B" depends largely on experimental data, not directly on a theoretical basis. For this reason, no definite value of the core loss can be given; it depends on the quality of core material which is available. Standard core material generally has a power loss of .86 watts per pound. It should be noted that better and better core material is constantly being made, having lower loss per pound, so that the use of higher flux densities is becoming possible. Up to 85 kilolines is not uncommon, but unusual for this application. The core loss increases with frequency, a typical curve being Figure "C."

5. *Induced-voltage Equation, Turns per Volt.* The elementary definition, that 10^8 magnetic lines cut, per second, will induce one volt pressure, is the basis of the equation

$$E = \frac{BANf}{10^8} \times 4.44$$

where E is the voltage, A the area of the core, B the flux density in the same units as A, f the cycles per second, and N the number of turns. A more useful working equation for small power transformers is obtained by solving for N/E in turns per volt:

$$\frac{N}{E} = \frac{10^8}{BAf4.44}$$

Figure "D" is an alignment chart of this equation. The left column is B the flux density, in both kilolines per square inch and kilogausses (kilolines per square centimeter), the center column is the net core area in both square inches and square centimeters, the right column giving the turns per volt for both 25 and 60 cycles per second.

Using a flux density of 65 kilolines per square inch and the net core area mentioned in step 3 (1.8 sq. in.), the turns per volt for 60 cycles are found to be 3.1 turns per volt. Thus for each volt on the transformer, there must be 3.1 turns. It is customary to change the turns per volt to an even number so that the proper center taps can be made. In this case, by using 4 turns per volt, with the same core area, the induction will be lower, with a corresponding lower core loss. It is also quite possible, and sometimes advisable, to change the core area so that an even number of turns per volt is given. For example, by increasing the core area to 2.8 sq. in. 2 turns per volt could be used, or decreased to 1.4 sq. in. so that 4 turns per volt would be used. The reason for desiring the even numbers of turns per volt is to

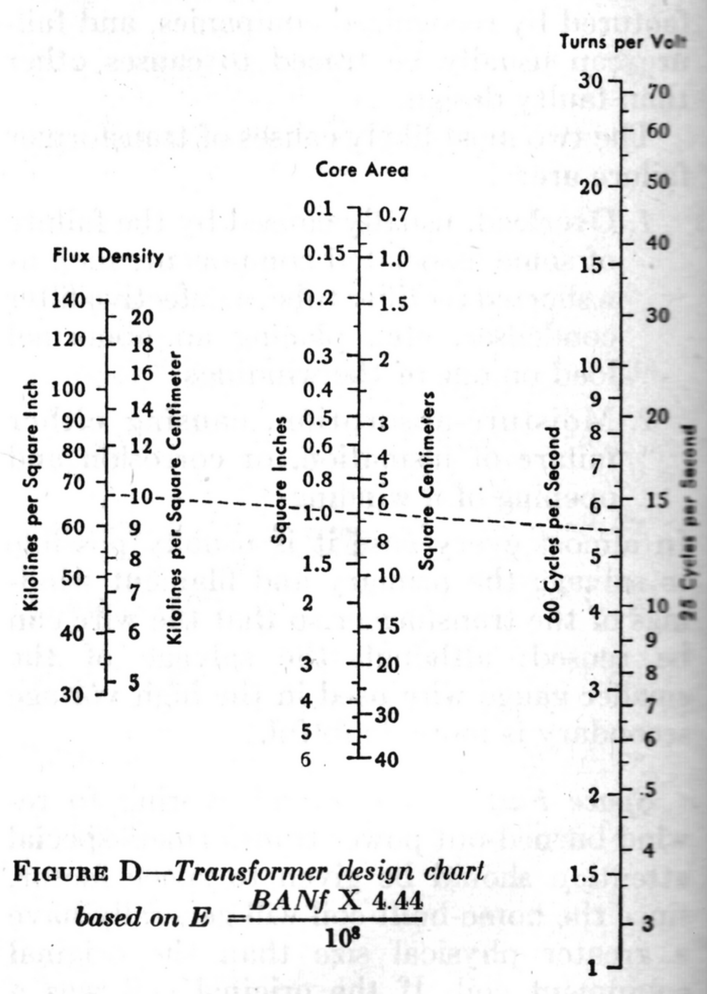

FIGURE D—*Transformer design chart based on* $E = \frac{BANf \times 4.44}{10^8}$

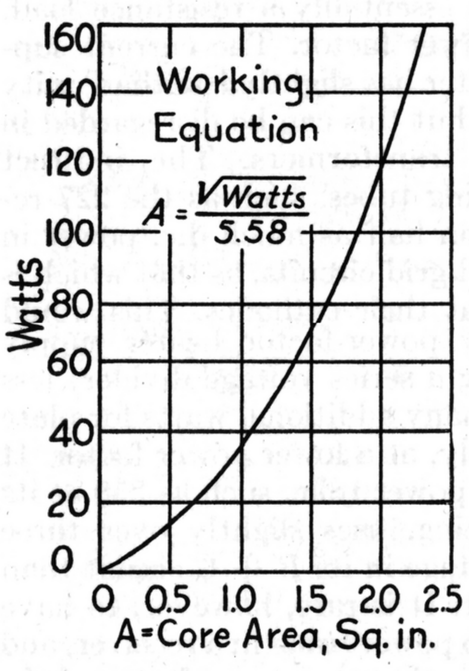

FIGURE A—*Small power transformer core area as a function of watts.*

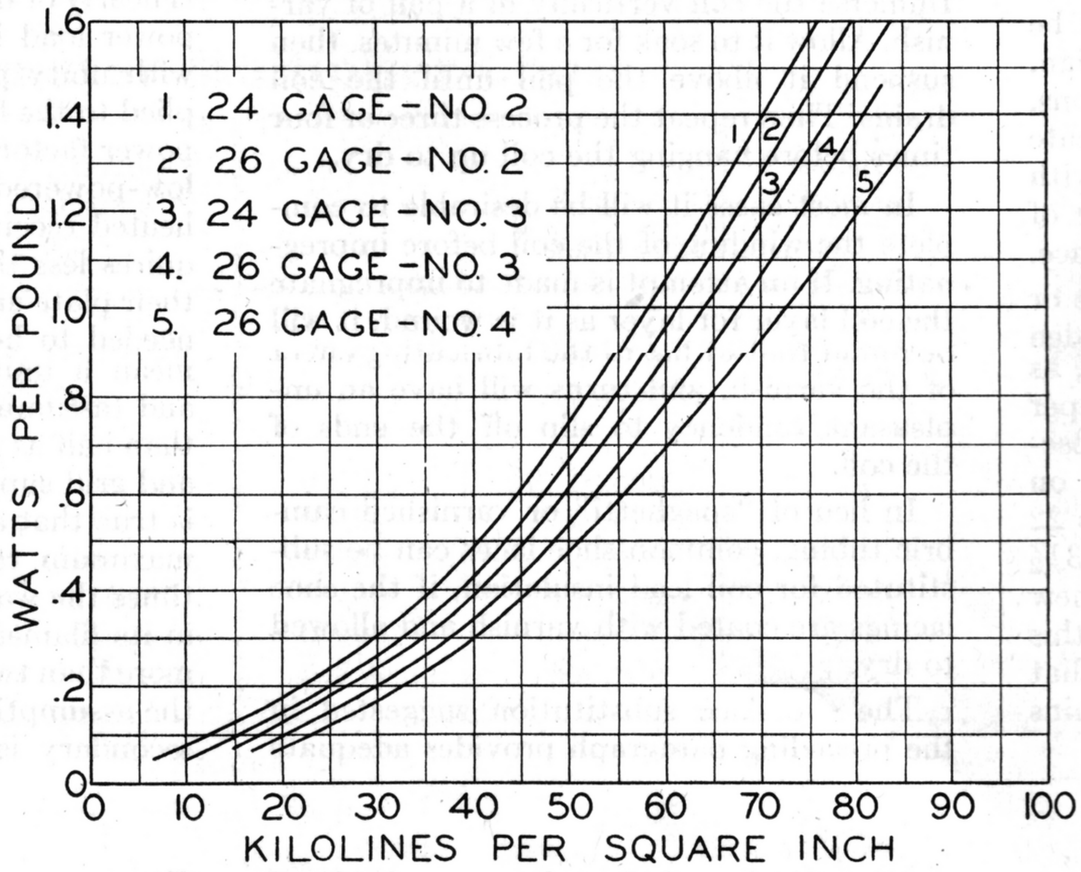

FIGURE B—*Core-loss curves Armco Radio grades (60 cycles).*

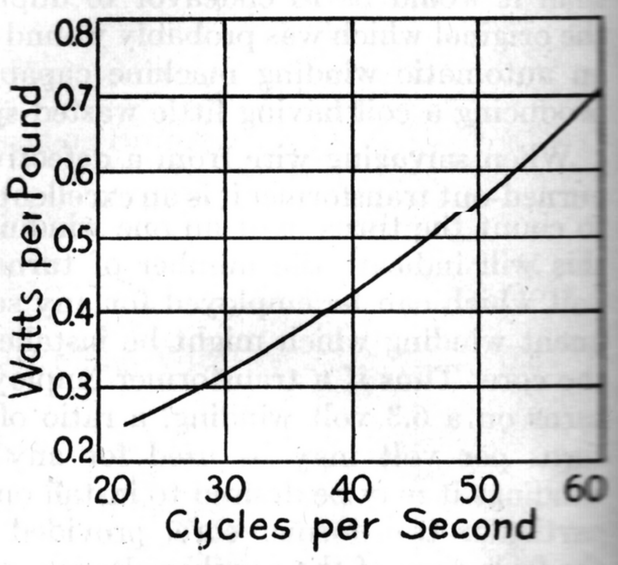

FIGURE C—*Core-loss vs. frequency* $B = 10{,}000$.

supply the 1/2-volt steps for receiving tubes, such as 7 1/2 volts, which would require an integral number of turns when the turns per volt are used.

The voltage drop in the transformer winding should be mentioned here. For instance, the load voltage at a tube filament is lower than the no-load voltage by the amount of *IR* drop in the winding and the connecting wires to the tube. Thus, it may be that to secure 7 1/2 volts at the tube filament, the transformer no-load voltage will have to be 8. In this case, any integral number of turns per volt, either odd or even, will suit the design.

6. *Turns for Each Winding.* In step 1 the desired voltages were given, E_1, E_2, etc. Using the value of turns per volt in step 5, the total turns for each winding are found. For example, with 4 turns per volt, a 110-volt winding should have $4 \times 110 = 440$ turns.

7. *Winding Space Required.* From the total turns for each winding, and the wire size, the total area of winding space is calculated. Different wires and insulations have definite turns per square inch. The method of insulation, however, may have these values vary by factors of as much as three to one. That is, a 900-turn coil wound in layers with enamel wire may take up one square inch of cross-section area. By interleaving thin insulating paper between layers, only 600 turns can be wound in a square-inch area; and by using a certain size of cotton interwoven between turns, only 400 turns can be wound in a square inch. Thus, the space of winding depends to a large degree on the kind and thickness of insulation. Double cotton-covered wire takes up considerably more space than enameled wire. Yet, if the extra-needed insulating space for the interlayer protection is considered, the space ratio may not be so great.

After adding up the winding space of all the windings the area should be compared with that of the core. If the winding will go in the core space, this part of the design is finished.

If the wires will not go in the available space, the winding may be redesigned, or the core area increased. Using thinner coverings for wire, fewer secondaries or fewer circular mils per ampere will decrease the space needed for the wire. A larger iron size or a thicker stack of the same sized iron will increase the core area and allow a smaller number of turns per volt, thus decreasing the cross section of the winding.

8. *Copper Loss.*

a. Find the length of the mean (average) turns in feet.

b. Find the length of each winding in feet by multiplying the number of turns by the mean turn length.

c. From the following wire table find the ohms per 1,000 feet for the size wire used, and then from 8-*b* the actual ohms for this length.

d. Multiply the current squared for each winding by the ohms for that winding.

e. Add the I^2R's for each winding to get the copper loss L_1.

9. *Core Loss.* The core loss in watts L_2 is found from the weight of the core and flux density and kind of core used in step 4. A useful factor is that 4 per cent silicon steel weighs 0.27 lb. per cubic inch.

10. *The approximate percentage efficiency is*

$$\frac{W_s \times 100}{W_s + L_1 + L_2},$$

W_s being the secondary watts (see step 1).

NOTE: If step 10 shows about 90 percent efficiency, the design is complete. If much less than 90 percent, step 1*a* must be modified, a new, larger value of *Ip* being used in finding a larger primary wire. This will not change the efficiency, but will prevent overloading the primary winding due to its carrying a greater current than that for which it was designed. It is desirable, as a rule, to keep the efficiency above 90 percent, and this can be done by reducing L_1 and L_2, by using larger wires, or larger cores.

Copper Wire Table

Gauge No. B. & S.	Diam. in Mils[1]	Circular Mil Area	Turns per Linear Inch[2]				Turns per Square Inch[2]			Feet per Lb.		Ohms per 1000 ft. 25° C.	Correct Capacity at 1500 C.M. per Amp.[3]	Diam. in mm.
			Enamel	S.S.C.	D.S.C. or S.C.C.	D.C.C.	S.C.C.	Enamel	D.C.C.	Bare	D.C.C.			
1	289.3	82690	—	—	—	—	—	—	—	3.947	—	.1264	55.7	7.348
2	257.6	66370	—	—	—	—	—	—	—	4.977	—	.1593	44.1	6.544
3	229.4	52640	—	—	—	—	—	—	—	6.276	—	.2009	35.0	5.827
4	204.3	41740	—	—	—	—	—	—	—	7.914	—	.2533	27.7	5.189
5	181.9	33100	—	—	—	—	—	—	—	9.980	—	.3195	22.0	4.621
6	162.0	26250	—	—	—	—	—	—	—	12.58	—	.4028	17.5	4.115
7	144.3	20820	—	—	—	—	—	—	—	15.87	—	.5080	13.8	3.665
8	128.5	16510	7.6	—	7.4	7.1	—	—	—	20.01	19.6	.6405	11.0	3.264
9	114.4	13090	8.6	—	8.2	7.8	—	—	—	25.23	24.6	.8077	8.7	2.906
10	101.9	10380	9.6	—	9.3	8.9	87.5	84.8	80.0	31.82	30.9	1.018	6.9	2.588
11	90.74	8234	10.7	—	10.3	9.8	110	105	97.5	40.12	38.8	1.284	5.5	2.305
12	80.81	6530	12.0	—	11.5	10.9	136	131	121	50.59	48.9	1.619	4.4	2.053
13	71.96	5178	13.5	—	12.8	12.0	170	162	150	63.80	61.5	2.042	3.5	1.828
14	64.08	4107	15.0	—	14.2	13.8	211	198	183	80.44	77.3	2.575	2.7	1.628
15	57.07	3257	16.8	—	15.8	14.7	262	250	223	101.4	97.3	3.247	2.2	1.450
16	50.82	2583	18.9	18.9	17.9	16.4	321	306	271	127.9	119	4.094	1.7	1.291
17	45.26	2048	21.2	21.2	19.9	18.1	397	372	329	161.3	150	5.163	1.3	1.150
18	40.30	1624	23.6	23.6	22.0	19.8	493	454	399	203.4	188	6.510	1.1	1.024
19	35.89	1288	26.4	26.4	24.4	21.8	592	553	479	256.5	237	8.210	.86	.9116
20	31.96	1022	29.4	29.4	27.0	23.8	775	725	625	323.4	298	10.35	.68	.8118
21	28.46	810.1	33.1	32.7	29.8	26.0	940	895	754	407.8	370	13.05	.54	.7230
22	25.35	642.4	37.0	36.5	34.1	30.0	1150	1070	910	514.2	461	16.46	.43	.6438
23	22.57	509.5	41.3	40.6	37.6	31.6	1400	1300	1080	648.4	584	20.76	.34	.5733
24	20.10	404.0	46.3	45.3	41.5	35.6	1700	1570	1260	817.7	745	26.17	.27	.5106
25	17.90	320.4	51.7	50.4	45.6	38.6	2060	1910	1510	1031	903	33.00	.21	.4547
26	15.94	254.1	58.0	55.6	50.2	41.8	2500	2300	1750	1300	1118	41.62	.17	.4049
27	14.20	201.5	64.9	61.5	55.0	45.0	3030	2780	2020	1639	1422	52.48	.13	.3606
28	12.64	159.8	72.7	68.6	60.2	48.5	3670	3350	2310	2067	1759	66.17	.11	.3211
29	11.26	126.7	81.6	74.8	65.4	51.8	4300	3900	2700	2607	2207	83.44	.084	.2859
30	10.03	100.5	90.5	83.3	71.5	55.5	5040	4660	3020	3287	2534	105.2	.067	.2546
31	8.928	79.70	101.	92.0	77.5	59.2	5920	5280	—	4145	2768	132.7	.053	.2268
32	7.950	63.21	113.	101.	83.6	62.6	7060	6250	—	5227	3137	167.3	.042	.2019
33	7.080	50.13	127.	110.	90.3	66.3	8120	7360	—	6591	4697	211.0	.033	.1798
34	6.305	39.75	143.	120.	97.0	70.0	9600	8310	—	8310	6168	266.0	.026	.1601
35	5.615	31.52	158.	132.	104.	73.5	10900	8700	—	10480	6737	335.0	.021	.1426
36	5.000	25.00	175.	143.	111.	77.0	12200	10700	—	13210	7877	423.0	.017	.1270
37	4.453	19.83	198.	154.	118.	80.3	—	—	—	16660	9309	533.4	.013	.1131
38	3.965	15.72	224.	166.	126.	83.6	—	—	—	21010	10666	672.6	.010	.1007
39	3.531	12.47	248.	181.	133.	86.6	—	—	—	26500	11907	848.1	.008	.0897
40	3.145	9.88	282.	194.	140.	89.7	—	—	—	33410	14222	1069	.006	.0799

[1]A mil is 1/1000 (one thousandth) of an inch.
[2]The figures given are approximate only, since the thickness of the insulation varies with different manufacturers.
[3]The current-carrying capacity at 1000 C.M. per ampere is equal to the circular-mil area (Column 3) divided by 1000.

When it becomes necessary in service work to check the operation of a particular part, such as an audio transformer, power transformer, or a dynamic speaker, quite a bit of time is consumed in identifying the various leads. In many instances, the color code of the leads has been designed to conform to the Radio Manufacturers' Association Standards for the particular part involved.

The following RMA color codes are presented with the view of simplifying this operation and are reproduced through the courtesy of the RMA.

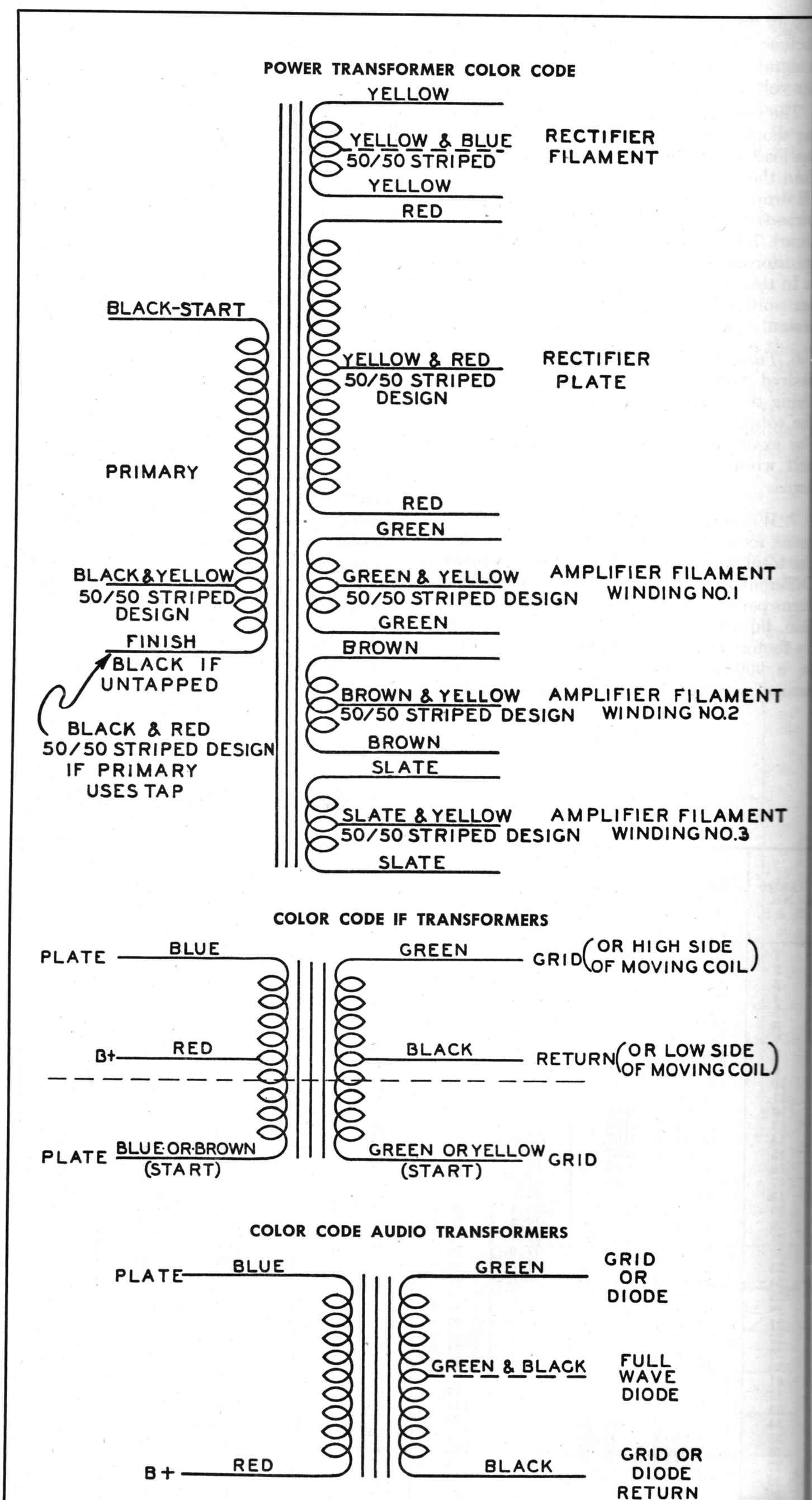

The upper portion (that code above the dotted line) for single primary and/or secondary transformers.

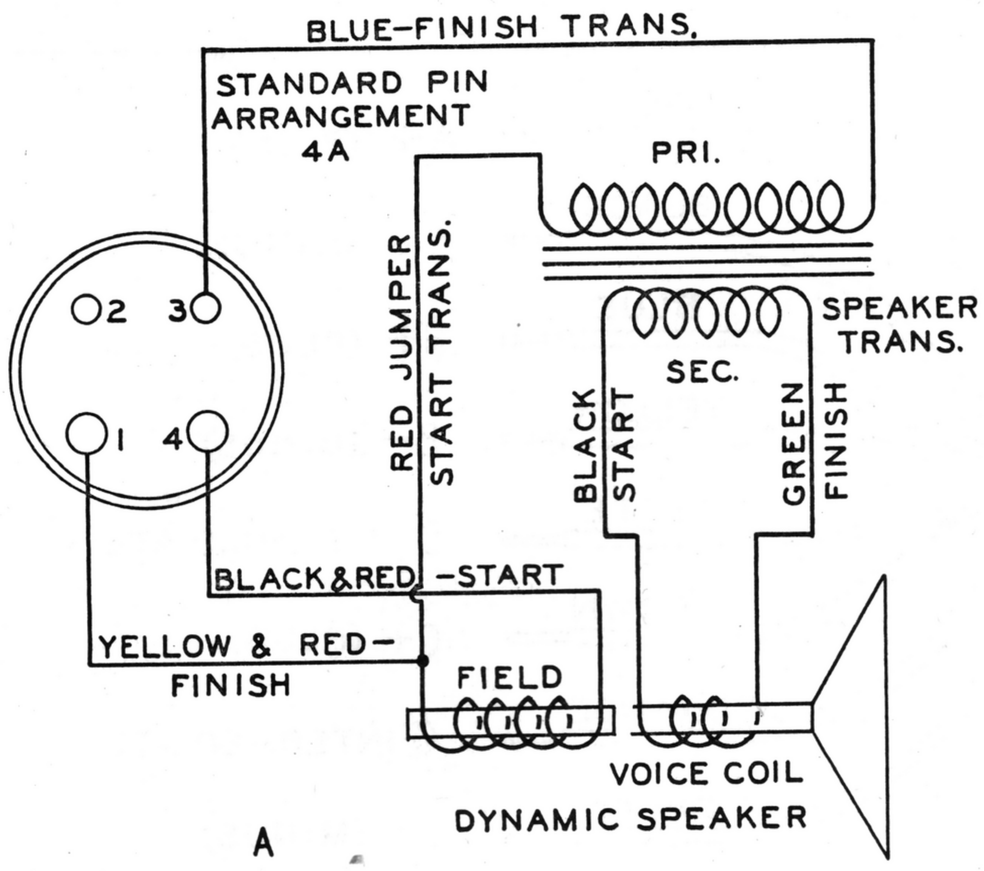

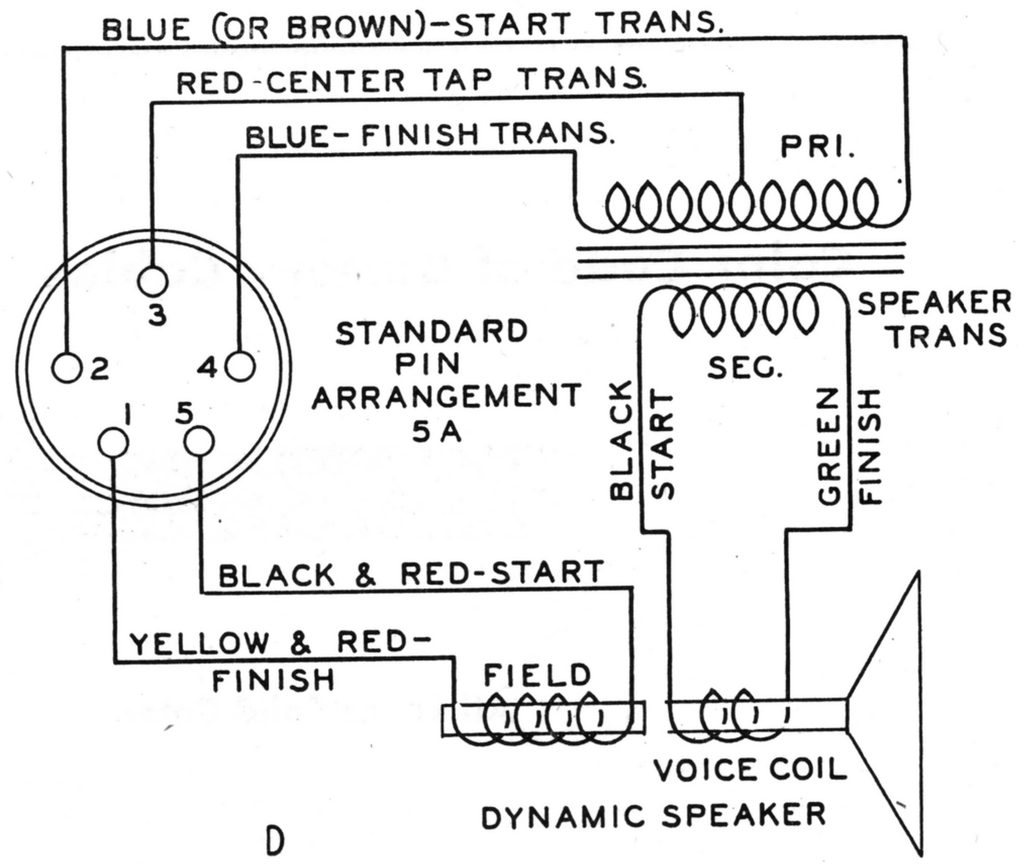

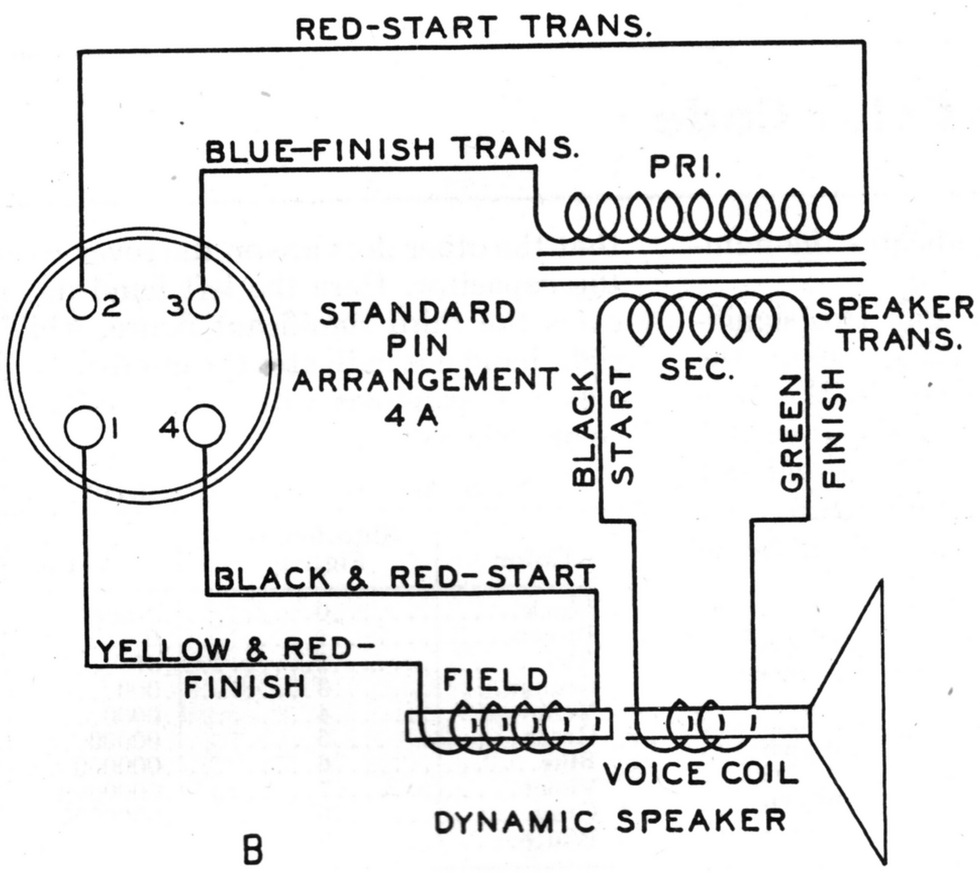

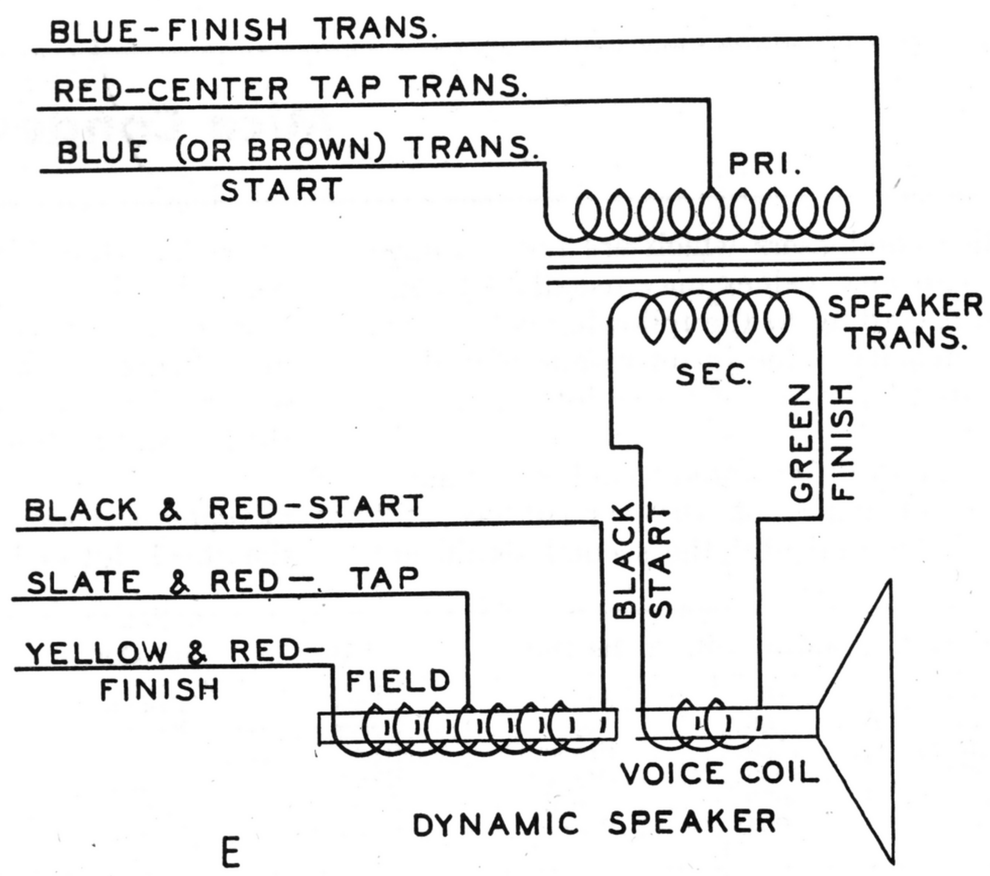

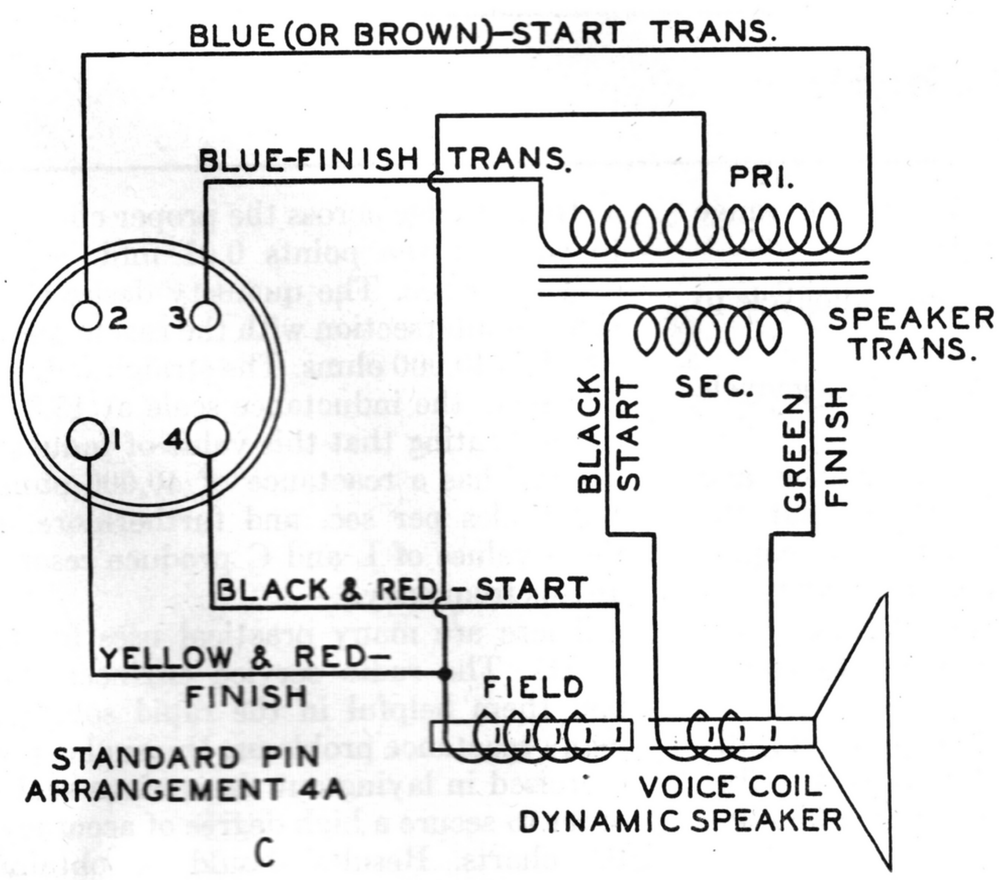

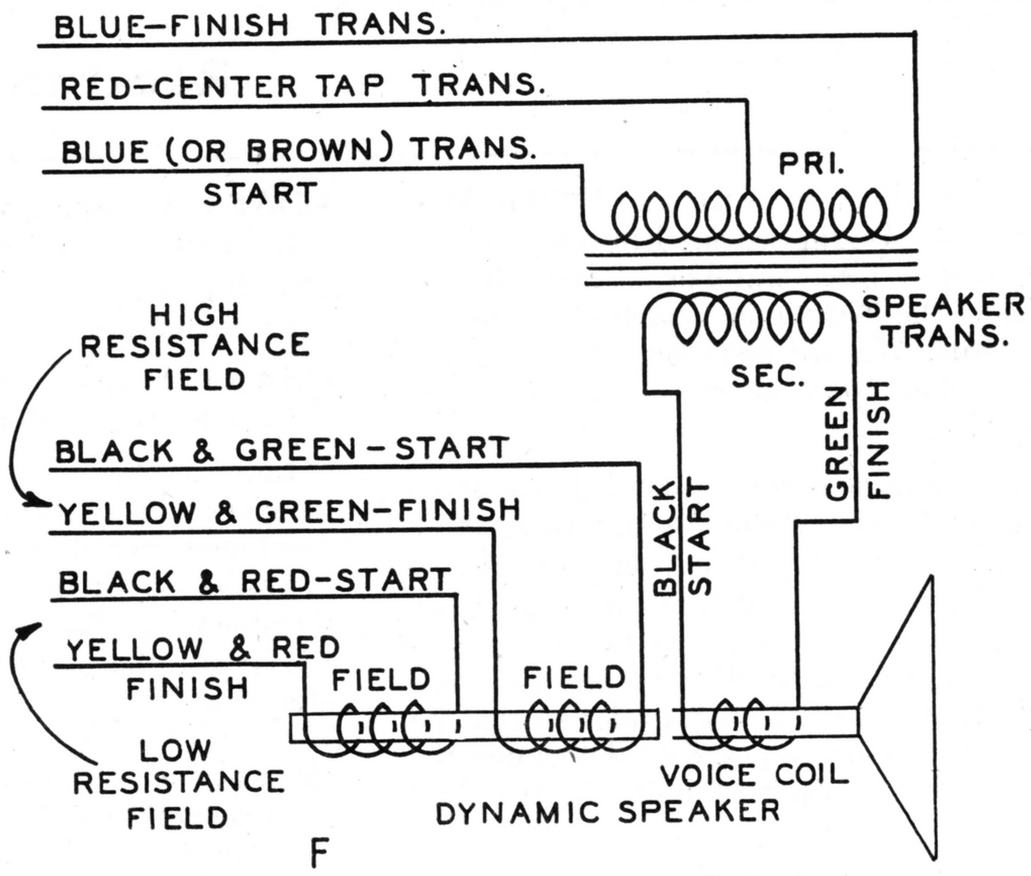

Figure A shows the standard 3-wire connections into a 4-prong plug. Only 3 leads are used since the B plus potential of the filter output is common to the B plus lead of the output transformer.

Figure B illustrates the standard 4-wire connection using the 4-prong plug.

Figure C shows the 4-wire push-pull wiring with 4-prong plug. As in Figure A the filter output lead and the output transformer B plus lead use a common connection.

Figure D shows the standard 5-wire push-pull connection with 5-prong plug.

Figure E illustrates the lead colors for a tapped field application, and **Figure F** shows the color code for a design in which two separate field coils are employed.

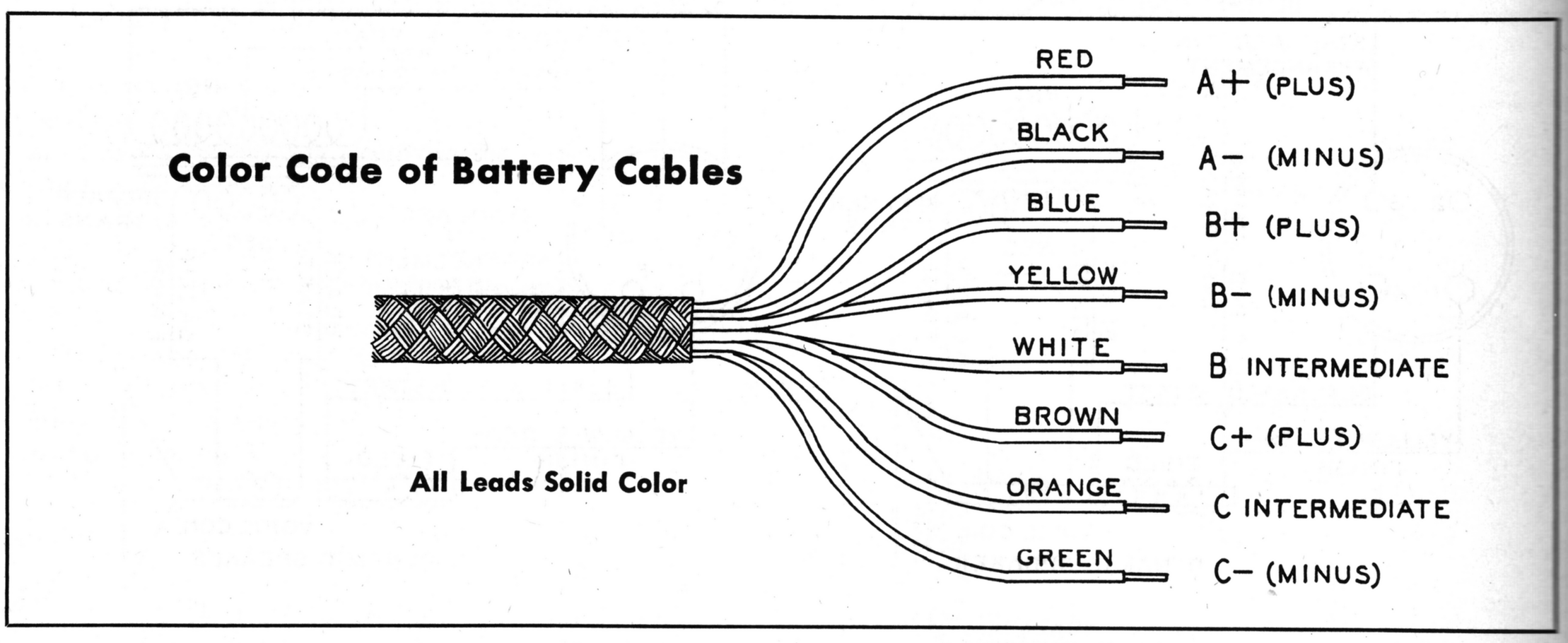

Mica Condenser Color Code

Mica condensers which are not stamped with capacity values may usually be identified according to the following color code. The capacity value in micro-microfarads is indicated by a row of three dots colored as follows:

The first dot is colored to indicate the first significant figure of the capacitance, the second dot indicates the second significant figure, and the third dot indicates the number of zeros.

In case there are more than two significant figures in the capacitance value the method is changed somewhat. In this case the first dot on the trade-mark side indicates the first significant figure, the second dot indicates the second significant figure, and the third dot is left uncolored to indicate that the other dots are on the reverse side of the capacitor. Here the left hand dot indicates the third significant figure, while the right hand dot indicates the number of zeros.

A few examples will show just how this color code works.

Cap. mfd.	Cap. mmfd.	1st Dot	2nd Dot	3rd Dot	4th Dot	5th Dot
.0001	100	Brown	Black	Brown		
.00025	250	Red	Green	Brown		
.00125	1250	Brown	Red		Green	Brown
.003	3000	Orange	Black	Red		
.00565	5650	Green	Blue		Green	Brown
.006	6000	Blue	Black	Red		

STANDARD COLOR CODE

Color	Significant Figure	Zeros
Black	0	None
Brown	1	0 (1)
Red	2	00 (2)
Orange	3	000 (3)
Yellow	4	0000 (4)
Green	5	00000 (5)
Blue	6	000000 (6)
Violet	7	0000000 (7)
Gray	8	00000000 (8)
White	9	000000000 (9)

Reactance Charts

Since publication of the 2nd Edition Mallory Yaxley Radio Service Encyclopedia we have had a large number of requests for copies of the Reactance Charts contained in that issue. We are answering this demand by including these charts on the following 3 pages.

The simplifications embodied in these charts make them more useful than those heretofore available. The frequency range covered comprises the frequency spectrum from 1 cycle per second up to 1000 megacycles per second. All of the scales involved are plotted in actual magnitudes so that no computations are required to determine the location of the decimal point in the final result.

To make these conditions possible the frequency spectrum has been divided into three parts:

CHART I (page 357)—Covers the range from 1 cycle to 1000 cycles.

CHART II (page 358)—From 1 kilocycle to 1000 kilocycles.

CHART III (page 359)—From 1 megacycle to 1000 megacycles.

Inductance, capacitance, reactance and frequency have been plotted so that the reactance offered by an inductance or capacitance at any frequency may be readily determined by placing a straight-edge across the proper chart so as to connect the known quantities.

Since XL = XC at resonance in most radio circuits, the charts may also be used to find the resonant frequency of any combination of L and C.

To illustrate with a simple example, suppose the reactance of a 0.01 mfd. condenser is desired at a frequency of 400 cycles. Place a straight-edge across the proper chart so as to connect the points 0.01 mfd. and 400 cycles per sec. The quantity desired is the point of intersection with the reactance scale which is 40,000 ohms. The straight-edge also intersects the inductance scale at 15.8 henries indicating that this value of inductance likewise has a reactance of 40,000 ohms at 400 cycles per sec. and furthermore, that these values of L and C produce resonance at this frequency.

There are many practical uses for these charts. The radio service engineer should find them helpful in the rapid solution of many reactance problems. Unusual care was exercised in laying out the various scales in order to secure a high degree of accuracy for the charts. Results should be obtainable which are at least as accurate as might be secured if computations were made with a good ten-inch slide rule.

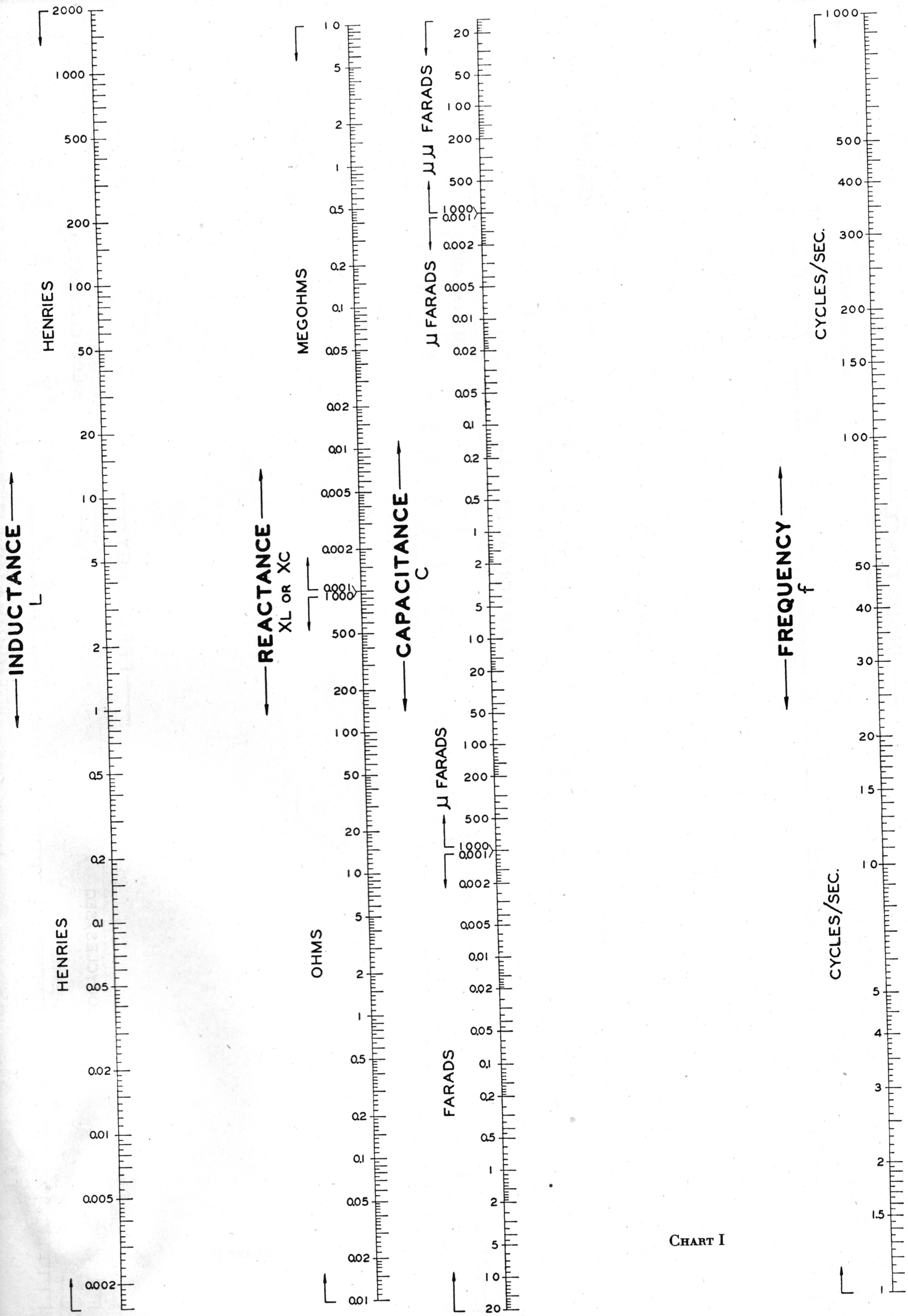
INDUCTANCE
L
HENRIES
2000
1000
500
200
100
50
20
10
5
2
1
0.5
0.2
0.1
0.05
0.02
0.01
0.005
0.002
REACTANCE
XL OR XC
MEGOHMS
OHMS
10
5
2
1
0.5
0.2
0.1
0.05
0.02
0.01
0.005
0.002
0.001
1000
500
200
100
50
20
10
5
2
1
0.5
0.2
0.1
0.05
0.02
0.01
0.005
0.002
CAPACITANCE
C
μμ FARADS
μ FARADS
FARADS
20
50
100
200
500
1000
0.001
0.002
0.005
0.01
0.02
0.05
0.1
0.2
0.5
1
2
5
10
20
50
100
200
500
1000
0.001
0.002
0.005
0.01
0.02
0.05
0.1
0.2
0.5
1
2
5
10
20
FREQUENCY
f
CYCLES/SEC.
1000
500
400
300
200
150
100
50
40
30
20
15
10
5
4
3
2
1.5
1

CHART I

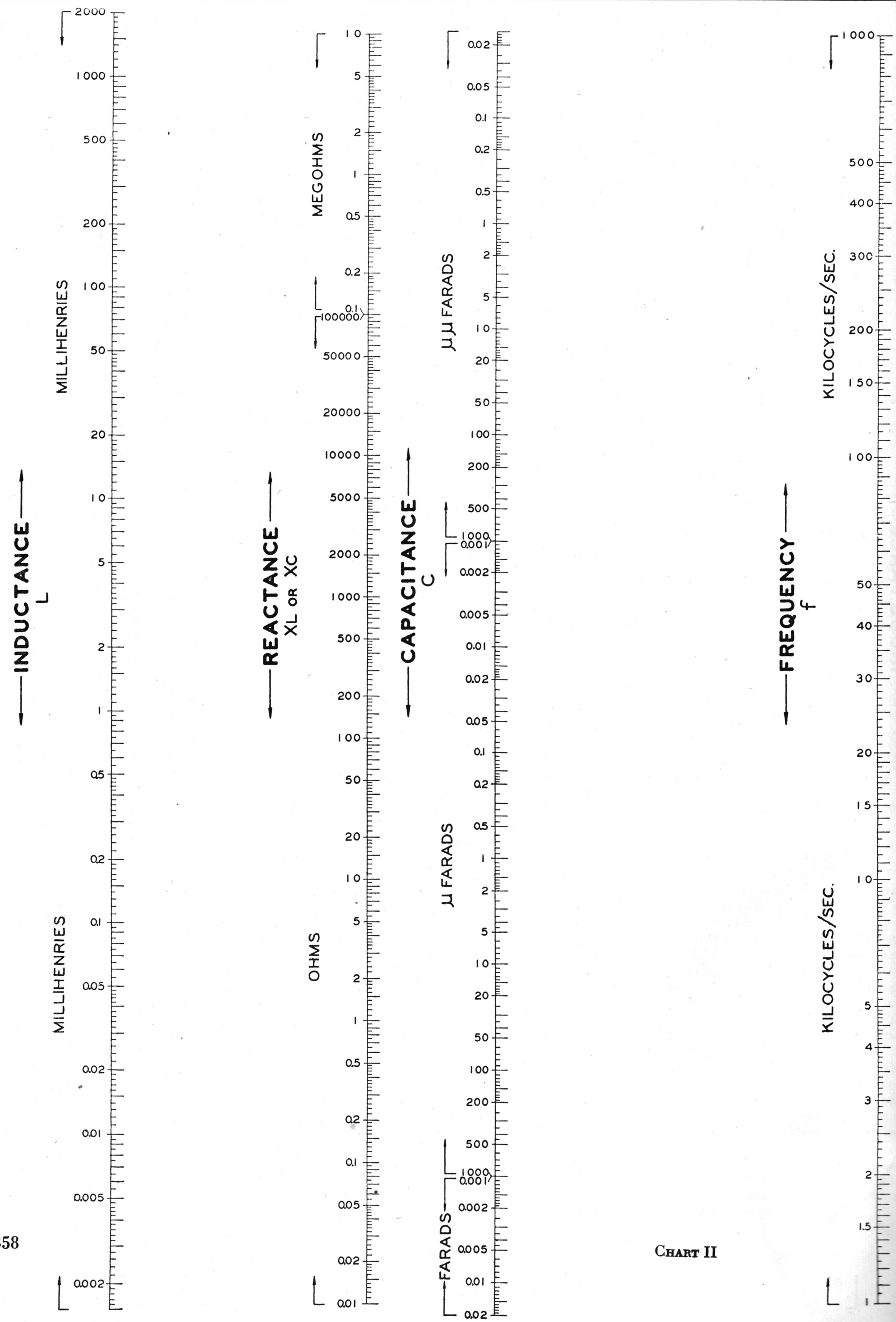
INDUCTANCE
L
MILLIHENRIES
2000
1000
500
200
100
50
20
10
5
2
1
0.5
0.2
0.1
0.05
0.02
0.01
0.005
0.002
REACTANCE
XL OR XC
MEGOHMS
OHMS
10
5
2
1
0.5
0.2
0.1
100000
50000
20000
10000
5000
2000
1000
500
200
100
50
20
10
5
2
1
0.5
0.2
0.1
0.05
0.02
0.01
CAPACITANCE
C
μμ FARADS
μ FARADS
FARADS
0.02
0.05
0.1
0.2
0.5
1
2
5
10
20
50
100
200
500
1000
0.001
0.002
0.005
0.01
0.02
0.05
0.1
0.2
0.5
1
2
5
10
20
50
100
200
500
1000
0.001
0.002
0.005
0.01
0.02
FREQUENCY
f
KILOCYCLES/SEC.
1000
500
400
300
200
150
100
50
40
30
20
15
10
5
4
3
2
1.5
1

CHART II

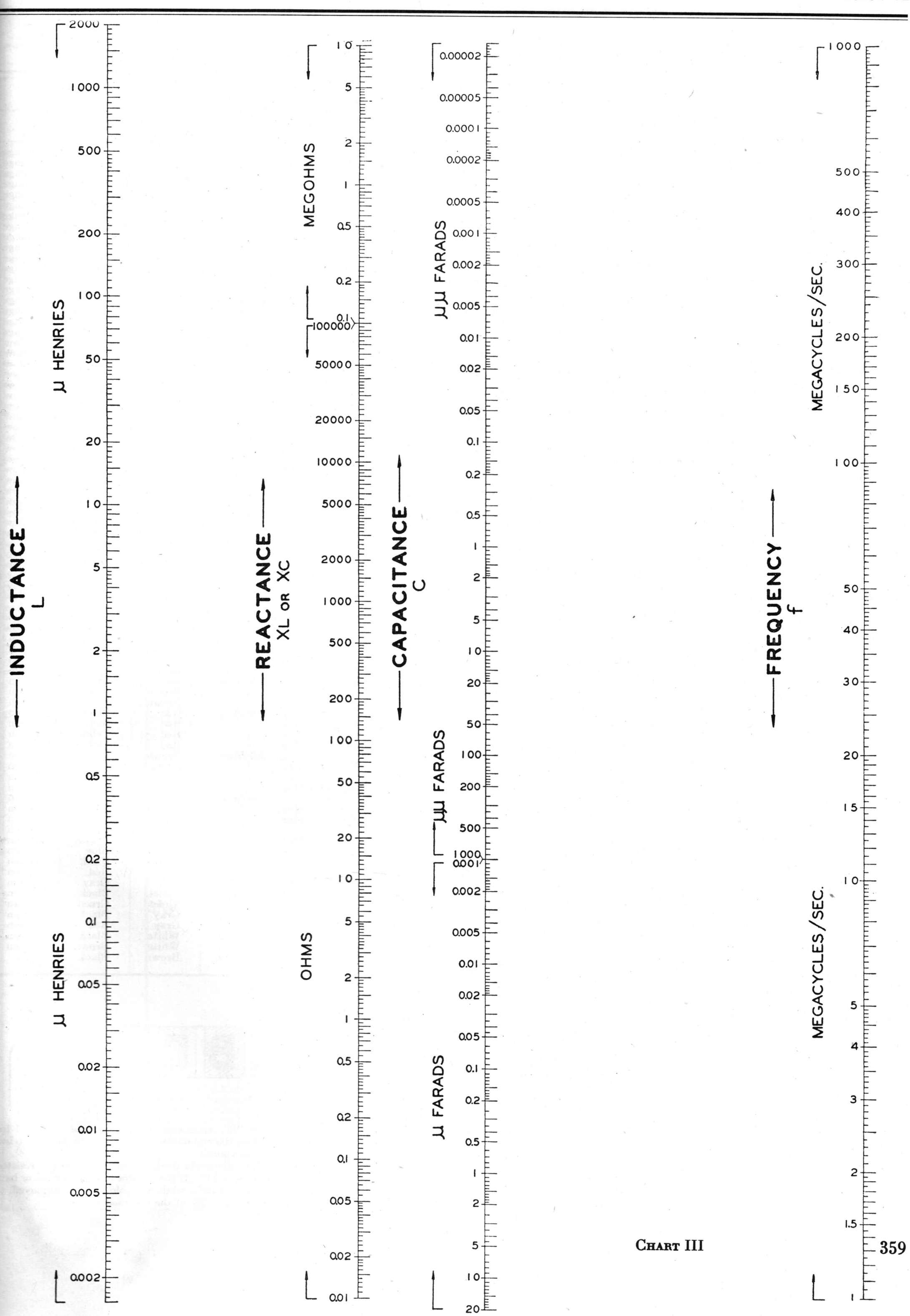
INDUCTANCE
L
μ HENRIES
2000
1000
500
200
100
50
20
10
5
2
1
0.5
0.2
0.1
0.05
0.02
0.01
0.005
0.002
REACTANCE
XL OR XC
MEGOHMS
OHMS
10
5
2
1
0.5
0.2
0.1
100000
50000
20000
10000
5000
2000
1000
500
200
100
50
20
10
5
2
1
0.5
0.2
0.1
0.05
0.02
0.01
CAPACITANCE
C
μμ FARADS
μ FARADS
0.00002
0.00005
0.0001
0.0002
0.0005
0.001
0.002
0.005
0.01
0.02
0.05
0.1
0.2
0.5
1
2
5
10
20
50
100
200
500
1000
0.001
0.002
0.005
0.01
0.02
0.05
0.1
0.2
0.5
1
2
5
10
20
FREQUENCY
f
MEGACYCLES/SEC.
1000
500
400
300
200
150
100
50
40
30
20
15
10
5
4
3
2
1.5
1

CHART III

STANDARD COLOR CODING FOR RESISTORS

Preferred Values of Resistance			Old Standard Resistance Values	Color Coding		
±20% D=no col.	±10% D=silver	±5% D=gold		A	B	C
			50	Green	Black	Black
		51		Green	Brown	Black
	56	56		Green	Blue	Black
		62		Blue	Red	Black
68	68	68		Blue	Gray	Black
		75	**75**	Violet	Green	Black
	82	82		Gray	Red	Black
		91		White	Brown	Black
100	100	100	**100**	Brown	Black	Brown
		110		Brown	Brown	Brown
	120	120		Brown	Red	Brown
		130		Brown	Orange	Brown
150	150	150	**150**	Brown	Green	Brown
		160		Brown	Blue	Brown
	180	180		Brown	Gray	Brown
		200	**200**	Red	Black	Brown
220	220	220		Red	Red	Brown
		240		Red	Yellow	Brown
			250	Red	Green	Brown
	270	270		Red	Violet	Brown
		300	**300**	Orange	Black	Brown
330	330	330		Orange	Orange	Brown
			350	Orange	Green	Brown
		360		Orange	Blue	Brown
	390	390		Orange	White	Brown
			400	Yellow	Black	Brown
		430		Yellow	Orange	Brown
			450	Yellow	Green	Brown
470	470	470		Yellow	Violet	Brown
			500	Green	Black	Brown
		510		Green	Brown	Brown
	560	560		Green	Blue	Brown
			600	Blue	Black	Brown
		620		Blue	Red	Brown
680	680	680		Blue	Gray	Brown
		750	**750**	Violet	Green	Brown
	820	820		Gray	Red	Brown
		910		White	Brown	Brown
1000	1000	1000	**1000**	Brown	Black	Red
		1100		Brown	Brown	Red
	1200	1200	**1200**	Brown	Red	Red
		1300		Brown	Orange	Red
1500	1500	1500	**1500**	Brown	Green	Red
		1600		Brown	Blue	Red
	1800	1800		Brown	Gray	Red
		2000	**2000**	Red	Black	Red
2200	2200	2200		Red	Red	Red
		2400		Red	Yellow	Red
			2500	Red	Green	Red
	2700	2700		Red	Violet	Red
		3000	**3000**	Orange	Black	Red
3300	3300	3300		Orange	Orange	Red
			3500	Orange	Green	Red
		3600		Orange	Blue	Red
	3900	3900		Orange	White	Red
			4000	Yellow	Black	Red
		4300		Yellow	Orange	Red
4700	4700	4700		Yellow	Violet	Red
			5000	Green	Black	Red
		5100		Green	Brown	Red
	5600	5600		Green	Blue	Red
		6200		Blue	Red	Red
6800	6800	6800		Blue	Gray	Red
		7500	**7500**	Violet	Green	Red
	8200	8200		Gray	Red	Red
		9100		White	Brown	Red
10,000	10,000	10,000	**10,000**	Brown	Black	Orange
		11,000		Brown	Brown	Orange
	12,000	12,000	**12,000**	Brown	Red	Orange
		13,000		Brown	Orange	Orange
15,000	15,000	15,000	**15,000**	Brown	Green	Orange
		16,000		Brown	Blue	Orange
	18,000	18,000		Brown	Gray	Orange
		20,000	**20,000**	Red	Black	Orange
22,000	22,000	22,000		Red	Red	Orange
		24,000		Red	Yellow	Orange

Preferred Values of Resistance			Old Standard Resistance Values	Color Coding		
±20% D=no col.	±10% D=silver	±5% D=gold		A	B	C
			25,000	Red	Green	Orange
	27,000	27,000		Red	Violet	Orange
		30,000	**30,000**	Orange	Black	Orange
33,000	33,000	33,000		Orange	Orange	Orange
		36,000		Orange	Blue	Orange
	39,000	39,000		Orange	White	Orange
			40,000	Yellow	Black	Orange
		43,000		Yellow	Orange	Orange
47,000	47,000	47,000		Yellow	Violet	Orange
			50,000	Green	Black	Orange
		51,000		Green	Brown	Orange
	56,000	56,000		Green	Blue	Orange
			60,000	Blue	Black	Orange
		62,000		Blue	Red	Orange
68,000	68,000	68,000		Blue	Gray	Orange
		75,000	**75,000**	Violet	Green	Orange
	82,000	82,000		Gray	Red	Orange
		91,000		White	Brown	Orange
100,000	100,000	100,000	**100,000**	Brown	Black	Yellow
		110,000		Brown	Brown	Yellow
	120,000	120,000	**120,000**	Brown	Red	Yellow
		130,000		Brown	Orange	Yellow
150,000	150,000	150,000	**150,000**	Brown	Green	Yellow
		160,000		Brown	Blue	Yellow
	180,000	180,000		Brown	Gray	Yellow
		200,000	**200,000**	Red	Black	Yellow
220,000	220,000	220,000		Red	Red	Yellow
		240,000		Red	Yellow	Yellow
			250,000	Red	Green	Yellow
	270,000	270,000		Red	Violet	Yellow
		300,000	**300,000**	Orange	Black	Yellow
330,000	330,000	330,000		Orange	Orange	Yellow
		360,000		Orange	Blue	Yellow
	390,000	390,000		Orange	White	Yellow
			400,000	Yellow	Black	Yellow
		430,000		Yellow	Orange	Yellow
470,000	470,000	470,000		Yellow	Violet	Yellow
			500,000	Green	Black	Yellow
		510,000		Green	Brown	Yellow
	560,000	560,000		Green	Blue	Yellow
			600,000	Blue	Black	Yellow
		620,000		Blue	Red	Yellow
680,000	680,000	680,000		Blue	Gray	Yellow
		750,000	**750,000**	Violet	Green	Yellow
	820,000	820,000		Gray	Red	Yellow
		910,000		White	Brown	Yellow
1.0 Meg.	1.0 Meg.	1.0 Meg.	**1.0 Meg.**	Brown	Black	Green
		1.1 Meg.		Brown	Brown	Green
	1.2 Meg.	1.2 Meg.		Brown	Red	Green
		1.3 Meg.		Brown	Orange	Green
1.5 Meg.	1.5 Meg.	1.5 Meg.	**1.5 Meg.**	Brown	Green	Green
		1.6 Meg.		Brown	Blue	Green
	1.8 Meg.	1.8 Meg.		Brown	Gray	Green
		2.0 Meg.	**2.0 Meg.**	Red	Black	Green
2.2 Meg.	2.2 Meg.	2.2 Meg.		Red	Red	Green
		2.4 Meg.		Red	Yellow	Green
	2.7 Meg.	2.7 Meg.		Red	Violet	Green
		3.0 Meg.	**3.0 Meg.**	Orange	Black	Green
3.3 Meg.	3.3 Meg.	3.3 Meg.		Orange	Orange	Green
		3.6 Meg.		Orange	Blue	Green
	3.9 Meg.	3.9 Meg.		Orange	White	Green
			4.0 Meg.	Yellow	Black	Green
		4.3 Meg.		Yellow	Orange	Green
4.7 Meg.	4.7 Meg.	4.7 Meg.		Yellow	Violet	Green
			5.0 Meg.	Green	Black	Green
		5.1 Meg.		Green	Brown	Green
	5.6 Meg.	5.6 Meg.		Green	Blue	Green
			6.0 Meg.	Blue	Black	Green
		6.2 Meg.		Blue	Red	Green
6.8 Meg.	6.8 Meg.	6.8 Meg.		Blue	Gray	Green
			7.0 Meg.	Violet	Black	Green
		7.5 Meg.		Violet	Green	Green
			8.0 Meg.	Gray	Black	Green
	8.2 Meg.	8.2 Meg.		Gray	Red	Green
			9.0 Meg.	White	Black	Green
		9.1 Meg.		White	Brown	Green
10 Meg.	10 Meg.	10 Meg.	**10 Meg.**	Brown	Black	Blue

Standardized coding for resistance value identification is confined to ten colors and figures as shown:

Figure	Color
0	Black
1	Brown
2	Red
3	Orange
4	Yellow
5	Green
6	Blue
7	Violet
8	Gray
9	White

The body (A) of the resistor is colored to represent the first figure of the resistance value. One end (B) of the resistor is colored to represent the second figure. A band, or dot (C) of color, representing the number of ciphers following the first two figures, is located within the body color. The two diagrams illustrate two interpretations of this standard method of coding resistance value.

The color "D" appearing on the body of the axial lead resistor and on the end of the radial lead type, is used to indicate tolerance value.

If no color appears in the position shown on the resistors, the tolerance is ±20%. If the resistor has a silver dot or band, the tolerance is ±10%, while if a gold color is employed, the resistor is within ±5% of the specified value.

Inductance of Single Layer Coils

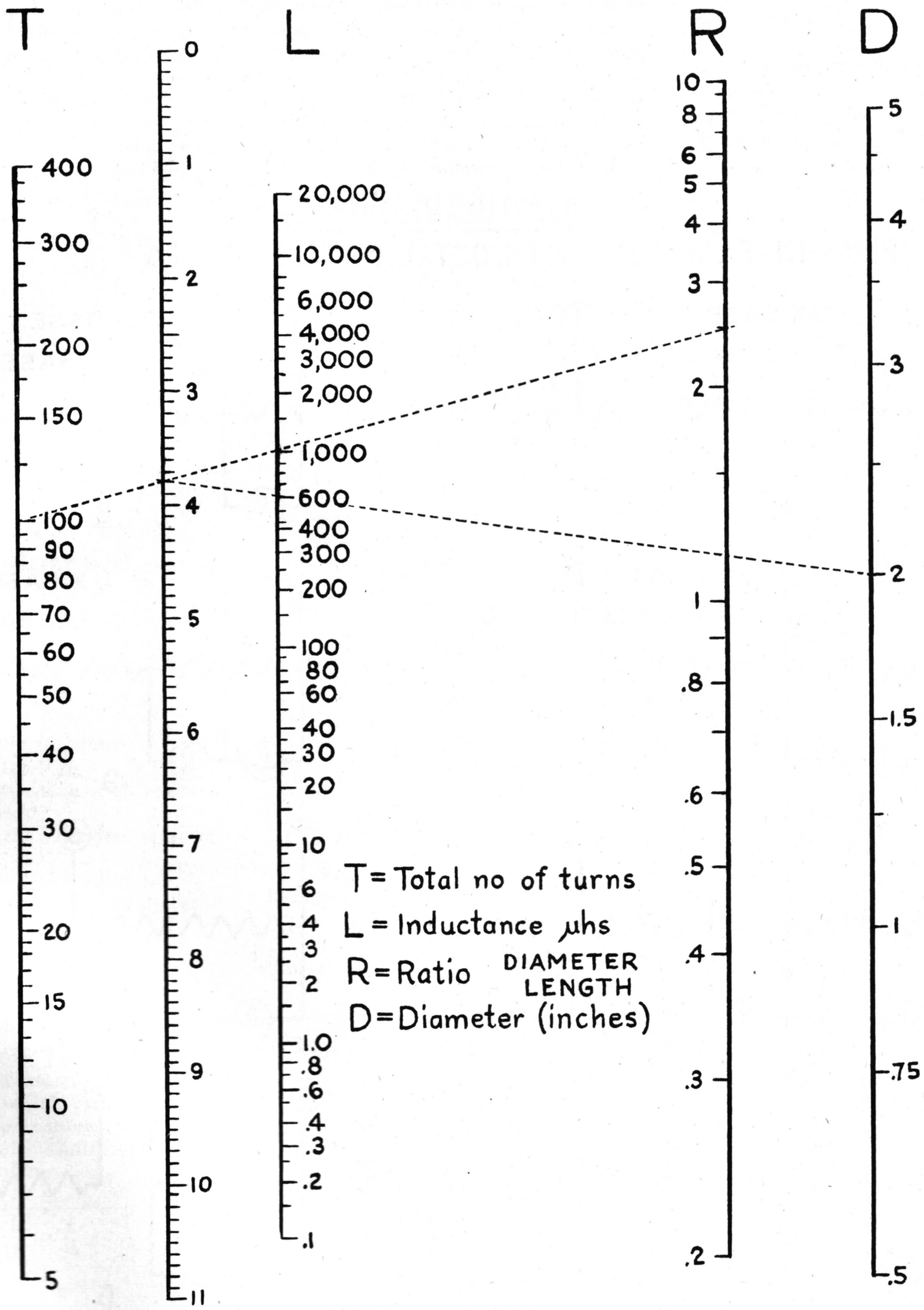

COIL TURNS, INDUCTANCE AND DIAMETER

Knowing the turns of a coil, its length of winding, and the diameter, the inductance may be found by using a straight-edge from the turns column to the ratio (diameter ÷ length) column, intersecting the axis column; then a second line from the intersection of the axis column to the diameter column. The inductance in microhenries will be the point where the second line intersects the inductance column. In the above chart the first line is laid from 100 turns to 2.5 ratio, this first line intersecting the axis at 3.8 on the scale. The second line is from 3.8 on the axis scale to the 2-inch diameter, intersecting the inductance column at 600 microhenries.

Knowing the diameter, ratio and the inductance, the number of turns may be found by reversing the process. As shown in the chart, draw a line from 2 inch diameter through the 600 microhenries intersecting axis at 3.8 on the scale; then run line from 3.8 on axis scale to 2.5 on ratio, the extension of this line cutting the turns scale at 100 which is the number of turns.

After finding number of turns, consult wire table to determine size of wire which will permit given number of turns in a given length of winding.

Ballast Tube Circuits

It has been popular in receivers of the AC-DC type, and in battery-powered receivers, to use plug-in type ballast resistors. The following information is presented to aid in identifying and checking the various ballast types.

In a large number of instances the type designation stamped on the tube indicates the value and circuit arrangement of the unit. As an example let us select one of the commonly used types such as BK55B.

The first letter "B" indicates that a ballast section for one or more pilot lamps is used.

The second letter, "K" in the above example, indicates that the pilot lamp (or lamps) is one of the 150 milliampere (0.15 ampere) type. The letter "L" at this position would indicate use of the 250 milliampere pilot lamp while the letter "M" would mean that a 200 milliampere lamp is employed.

The number 55 (or any number used in the same location) gives the total voltage drop across the resistance including the pilot lamp (or lamps) at the current specified during normal operation.

The final letter "B" indicates the circuit arrangement. Reference is made to the popular type base wiring diagrams as shown below, where circuit B illustrates the wiring diagrams for either octal or UX type base.

Particular attention should be used in any types bearing the "E" circuit designation since both circuit "E" and "E_1" have been used under the plain "E" classification.

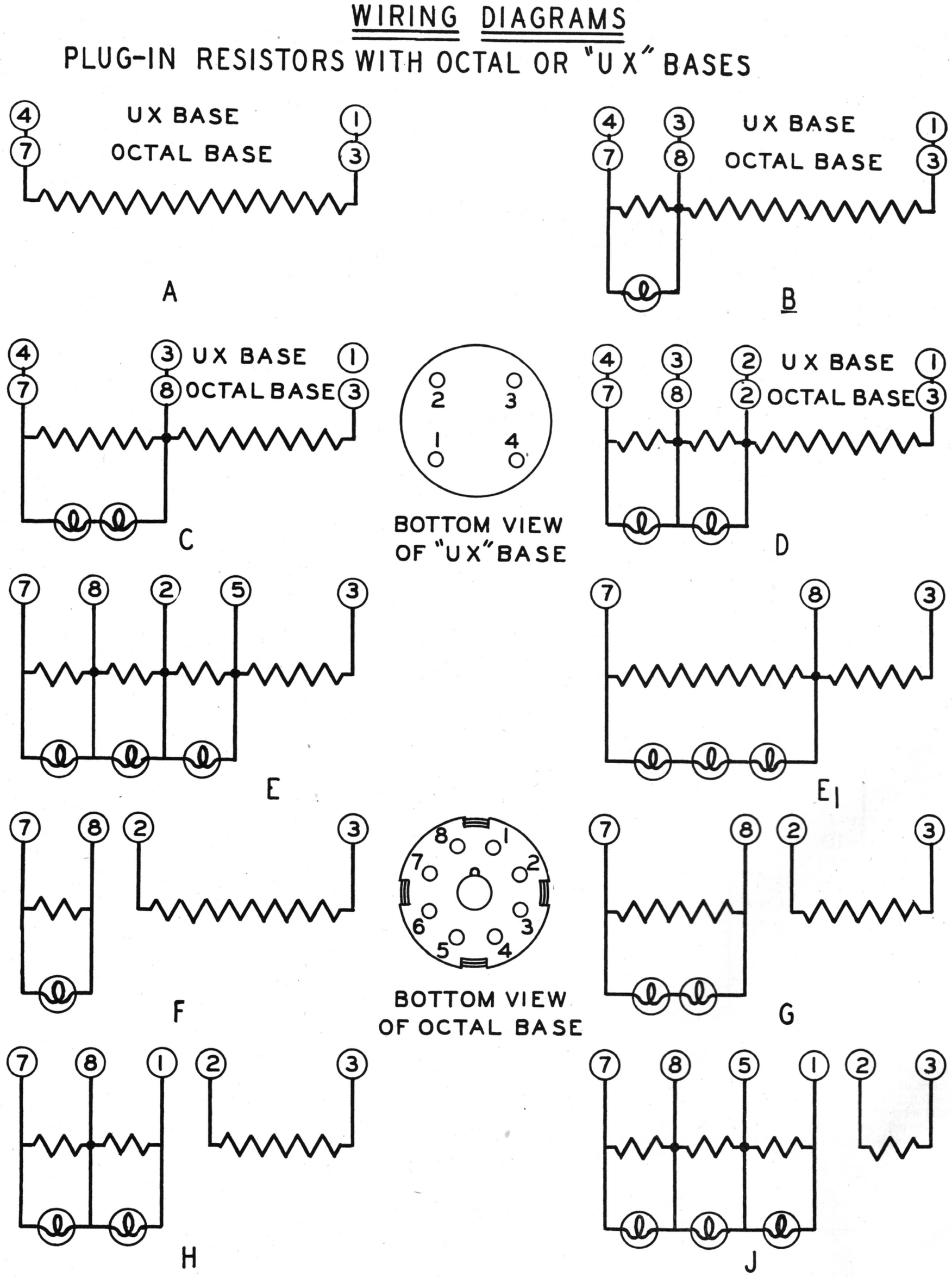

AUTOMOBILE BATTERY GROUND CHART

YEAR	1934	1935	1936	1937	1938	1939	1940	1941	1942
Auburn	Pos.	Pos.	Pos.	Pos.					
Buick	Neg.	Neg.	Neg.	Neg.	Neg.	Neg.	Neg.	Neg.	Neg.
Cadillac	Pos.	Pos.	Pos.	Neg.	Pos.	Pos.	Pos.	Pos.	Pos.
Chevrolet	Neg.	Neg.	Neg.	Neg.	Neg.	Neg.	Neg.	Neg.	Neg.
Chrysler		Pos.	Pos.	Pos.	Pos.	Pos.	Pos.	Pos.	Pos.
Cord			Pos.	Pos.					
DeSoto	Pos.	Pos.	Pos.	Pos.	Pos.	Pos.	Pos.	Pos.	Pos.
Dodge	Pos.	Pos.	Pos.	Pos.	Pos.	Pos.	Pos.	Pos.	Pos.
Duesenberg	Neg.	Neg.	Neg.						
Ford	Pos.	Pos.	Pos.	Pos.	Pos.	Pos.	Pos.	Pos.	Pos.
Franklin	Pos.								
Graham	Pos.	Pos.	Pos.	Pos.	Pos.	Pos.			
Hudson	Pos.	Pos.	Pos.	Pos.	Pos.	Pos.	Pos.	Pos.	Pos.
Hupmobile	Pos.	Pos.	Pos.		Pos.	Pos.			
Lafayette	Pos.	Pos.	Pos.	Pos.	Pos.	Pos.	Pos.	Pos.	
LaSalle	Pos.	Pos.	Pos.	Neg.	Pos.	Pos.	Pos.		
Lincoln	Neg.	Neg.	Neg.	Neg.	Neg.	Neg.	Neg.		
Lincoln Zeph.				Pos.	Pos.	Pos.	Pos.	Pos.	Pos.
Mercury						Pos.	Pos.	Pos.	Pos.
Nash*	Pos.	Pos.	Pos.	Pos.	Pos.	Pos.	Pos.	Pos.	Pos.
Oldsmobile	Neg.	Neg.	Neg.	Neg.	Neg.	Neg.	Neg.	Neg.	Neg.
Packard	Pos.	Pos.	Pos.	Pos.	Pos.	Pos.	Pos.	Pos.	Pos.
Pierce-Arrow	Pos.	Pos.	Pos.	Pos.	Pos.	Pos.			
Plymouth	Pos.	Pos.	Pos.	Pos.	Pos.	Pos.	Pos.	Pos.	Pos.
Pontiac	Neg.	Neg.	Neg.	Neg.	Neg.	Neg.	Neg.	Neg.	Neg.
Studebaker	Pos.	Pos.	Pos.	Pos.	Pos.	Pos.	Pos.	Pos.	Pos.
Terraplane	Pos.	Pos.	Pos.	Pos.	Pos.	Pos.	Pos.	Pos.	
Willys		Neg.	Neg.	Neg.	Neg.	Neg.	Neg.	Neg.	Neg.

*Some special custom-built models have negative grounded.

Ohms Law for Direct Current

$E = I \times R$ Where:

$I = \frac{E}{R}$ E = Voltage

I = Current in Amperes

$R = \frac{E}{I}$ R = Resistance in Ohms

Resistances in Series

$$R_t = R_1 + R_2 + R_3 \ldots R_n$$

Where: R_t is the total value of all resistors connected in series.

R_1, R_2, etc., are the individual resistors.

Resistance in Parallel

The formula for resistances in parallel is:

$$R_t = \frac{1}{\frac{1}{R_1} + \frac{1}{R_2} + \frac{1}{R_3} \text{ etc.}}$$

Where: R_t is the effective value of all the resistors connected in parallel.

R_1, R_2, R_3 are the individual resistors.

This formula may be extended as far as one has resistances in parallel. For an example let us say we have four resistances of 5 ohms, 10 ohms, 20 ohms, and 30 ohms. Substituting in our formula we obtain:

$$R_t = \frac{1}{\frac{1}{5} + \frac{1}{10} + \frac{1}{20} + \frac{1}{30}}$$

$$= \frac{60}{12 + 6 + 3 + 2}$$

$$= \frac{60}{23} = 2.60 \text{ ohms total resistances.}$$

A convenient formula for only two resistances in a parallel circuit is:

$$R_t = \frac{R_1 \times R_2}{R_1 + R_2}$$

By referring back to the formula for resistances in parallel one may readily see how this equation is derived. As an example for this formula let us use values of 10 ohms and 35 ohms. Substituting in our formula:

$$R_t = \frac{10 \times 35}{10 + 35} = \frac{350}{45} = 7.7+ \text{ ohms}$$

Capacity of Parallel Plates

When two conducting plates are parallel, close together, and of large area, the capacity is given by

$$C = 0.0885 \text{ times } \frac{KS}{t}$$

Where C = capacity in micromicrofarads

K = dielectric constant

S = area of one plate in square centimeters

t = distance between plates in centimeters

Reactance (Capacitive) of a Condenser

$$X_c = \frac{10^6}{2\pi fC}$$

Where: π = 3.14

f = frequency

C = capacity in microfarads

Example: What is the reactance of a 2-mf. condenser at 50 cycles?

$$\frac{10^6}{6.3 \times 50 \times 2} = 1{,}590 \text{ ohms}$$

Impedance of a Circuit

The impedance of a circuit consisting of a resistor and capacitor in series is:

$$Z = \sqrt{R^2 + X_c^2}$$

The impedance of a circuit consisting of a resistor in parallel with a condenser is:

$$Z = \frac{RX_c}{\sqrt{R^2 + X_c^2}}$$

Reactance (Inductive) of a Coil

$$X_L = 2\pi fL$$

Where π = 3.14

f = frequency in cycles per second

L = inductance in henries

Example: What is the reactance of a 20-henry choke at 50 cycles?

$$6.3 \times 50 \times 20 = 6{,}300 \text{ ohms}$$

Power Factor of a Condenser

$$Pf = \frac{R}{\sqrt{R^2 + \left(\frac{1}{\omega C}\right)^2}}$$

Where: R = the resistance of the condenser

ω = 6.28 times the frequency

C = capacity in farads

On a bridge the resistance (R) is determined by dividing the reading of the series resistance (R_s) by the ratio of A/B (where the resistance of C_s is negligible).

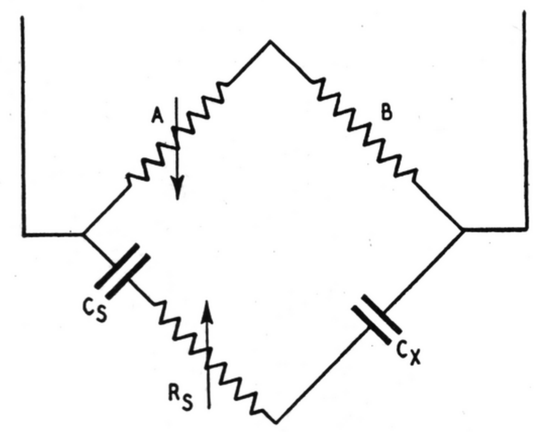

Dissipation Factor Q

The ratio Q of reactance to resistance is generally used as the factor of merit of a coil or condenser and is called the dissipation constant.

$$\text{For a coil } Q = \frac{\omega L}{R}$$

$$\text{For a condenser } Q = \frac{1}{\omega RC}$$

Equivalent Impedance of a Series Circuit

When an inductance, capacity and a resistance are connected in series, the combined effect is called the impedance of the circuit.

$$Z_o = \sqrt{R^2 + (X_L - X_c)^2}$$

Where: Z = impedance in ohms

R = resistance in ohms

X_L = reactance of inductance in ohms

X_c = reactance of capacity in ohms

Equivalent Impedance of a Parallel Circuit

When an inductance, capacity and resistance are connected in parallel the equivalent impedance

$$Z_o = \frac{RX_L X_c}{\sqrt{(RX_L - RX_c)^2 + X_L^2 X_c^2}}$$

Frequency

Where: f = frequency in cycles

π = 3.14

L = inductance in microhenries

C = capacity in microfarads (mf.)

$$f = \frac{10^6}{2\pi\sqrt{LC}}$$

Example: To what frequency will a 0.0005 mf. (500 mmf.) condenser, in parallel with a 180-microhenry coil, tune?

$$\frac{10^6}{6.3\sqrt{180 \times 0.0005}} = 530{,}000 \text{ cycles} = 530 \text{ kilocycles} = 565 \text{ meters}$$

Conversion Table
Frequency to Wavelength

$$\text{Wavelength in Meters} = \frac{300{,}000}{\text{Frequency in Kilocycles}} \text{ or } \frac{300}{\text{Frequency in Megacycles}}$$

Long-Wave Broadcast Band		Short Waves	
Frequency Kilocycles	Wavelength Meters	Frequency Megacycles	Wavelength Meters
550	545	1.5	200
600	500	2	150
650	461	3	100
700	429	4	75.0
750	400	5	60.0
800	375	6	50.0
850	353	7	42.9
900	333	8	37.5
950	316	9	33.3
1000	300	10	30.0
1050	286	11	27.3
1100	273	12	25.0
1150	261	13	23.1
1200	250	14	21.4
1250	240	15	20.0
1300	231	16	18.8
1350	222	17	17.6
1400	214	18	16.7
1450	207	19	15.8
1500	200	20	15.0

Transformer Ratios

$$\frac{\text{The Voltage across the Secondary}}{\text{The Voltage across the Primary}} \text{ equals } \frac{\text{The Number of Secondary Turns}}{\text{The Number of Primary Turns}}$$

AC Voltage and Power

Where Z is the *Impedance* in Ohms, E is *Effective* Electromotive Force in Volts, and I is Current Intensity in Amperes, then

$$I = \frac{E}{Z} \qquad E = Z \times I \qquad Z = \frac{E}{I}$$

The *Maximum* Voltage E_m is 1.414 × the *Effective* Voltage E_e.

The *Effective* Voltage E_e is 0.707 × the *Maximum* Voltage E_m.

The *Average* Voltage E_e is 0.636 × the *Maximum* Voltage E_m.

The *Power* in an AC circuit

$$W = I \times E \times \frac{R}{Z}$$

Where the Angle of Lag or lead, Φ and the

$$\text{Power Factor } \frac{R}{Z} = \textit{Cosine } \Phi,$$

$$\textit{Sine } \Phi = \frac{X}{Z}, \text{ and } \textit{Tangent } \Phi = \frac{X}{R}$$

The Decibel

The number of decibels corresponding to a given power ratio is 10 times the common logarithm of the ratio.

$$N = 10 \operatorname{Log}_{10} \frac{P_2}{P_1}$$

Where: N = decibels.

$$\frac{P_2}{P_1} = \text{power ratio}$$

In the case of voltage or current the number of decibels corresponds to 20 times the common logarithm of the ratio.

Example: What gain in decibels will there be if the voltage in an amplifier rises to 7 times the normal level at a certain frequency?

$N = 20 \log_{10} 7 = 20 \times 0.845 = 17$ decibels.

At the top of the next column, logarithms are given of several representative numbers. Many logarithms not in the table may be obtained by dividing the number (N) into its factors as shown under the table and adding the logarithms of the factors.

N	LOG.	N	LOG.
2.0	.3010	7.0	.8451
2.5	.3979	7.5	.8751
3.0	.4771	8.0	.9031
3.5	.5441	8.5	.9294
4.0	.6021	9.0	.9542
4.5	.6532	9.5	.9777
5.0	.6990	10.0	1.0000
5.5	.7404	100.0	2.0000
6.0	.7782	1000.0	3.0000
6.5	.8129	10000.0	4.0000

Log. XY = Log. X + Log. Y

For example:

8500 = 8.5 × 1000

Log. 8500 = 3.9294

18 = 2 × 9

Log. 18 = 1.2552

Power Output

When E_g expresses the RMS (Root-Mean-Square) Effective Value of the AC Input, the

$$\text{Power Output} = \frac{\mu^2 \times E_g^2 \times R_p}{(r_p + R_p)^2}$$

The Maximum Power Output is $\dfrac{\mu^2 \times E_g^2}{4r_p}$

The Maximum Undistorted Power Output is $\dfrac{2\,\mu^2 \times E_g^2}{9r_p}$

When E_g is the Maximum (Peak) A. C. Input Value

The Maximum Undistorted Power Output is $\dfrac{\mu^2 \times E_g^2}{9r_p}$

Conversion—Factors for conversion—alphabetically arranged.

Multiply	By	To Get
Amperes	× 1,000,000,000,000	micromicroamperes
Amperes	× 1,000,000	microamperes
Amperes	× 1,000	milliamperes
Cycles	× .000,001	megacycles
Cycles	× .001	kilocycles
Farads	× 1,000,000,000,000	micromicrofarads
Farads	× 1,000,000	microfarads
Farads	× 1,000	millifarads
Henrys	× 1,000,000	microhenrys
Henrys	× 1,000	millihenrys
Kilocycles	× 1,000	cycles
Kilovolts	× 1,000	volts
Kilowatts	× 1,000	watts
Megacycles	× 1,000,000	cycles
Mhos	× 1,000,000	micromhos
Mhos	× 1,000	millimhos
Microamperes	× .000,001	amperes
Microfarads	× .000,001	farads
Microhenrys	× .000,001	henrys
Micromhos	× .000,001	mhos
Micro-ohms	× .000,001	ohms
Microvolts	× .000,001	volts
Microwatts	× .000,001	watts
Micromicrofarads	× .000,000,000,001	farads
Micromicro-ohms	× .000,000,000,001	ohms
Milliamperes	× .001	amperes
Millihenrys	× .001	henrys
Millimhos	× .001	mhos
Milliohms	× .001	ohms
Millivolts	× .001	volts
Milliwatts	× .001	watts
Ohms	× 1,000,000,000,000	micromicro-ohms
Ohms	× 1,000,000	micro-ohms
Ohms	× 1,000	milliohms
Volts	× 1,000,000	microvolts
Volts	× 1,000	millivolts
Watts	× 1,000,000	microwatts
Watts	× 1,000	milliwatts
Watts	× .001	kilowatts

Greek Alphabet

Name	Letters Cap.	Letters Small	Commonly used to designate
Alpha	A	α	Angles. Coefficients. Area.
Beta	B	β	Angles. Coefficients.
Gamma	Γ	γ	Specific gravity. Conductivity.
Delta	Δ	δ	Decrements. Variation. Density.
Epsilon	E	ε	E.m.f. Base of hyperbolic logarithms.
Zeta	Z	ζ	Impedance. Co-ordinates.
Eta	H	η	Hysteresis coefficient. Efficiency.
Theta	Θ	ϑ	Angular phase displacement. Time constant.
Iota	I	ι	Current in amperes.
Kappa	K	ϰ	Dielectric constant. Susceptibility. Kilo. Visibility.
Lambda	Λ	λ	(Small) Wave length.
Mu	M	μ	Permeability. Amplification factor. Prefix micro-
Nu	N	ν	Reluctivity.
Xi	Ξ	ξ	
Omicron	O	ο	
Pi	Π	π	Circumference divided by diameter, 3.1416.
Rho	P	ϱ	Resistivity.
Sigma	Σ	σ	(Cap) Sign of summation.
Tau	T	τ	Time constant. Time-phase displacement.
Upsilon	Y	υ	
Phi	Φ	φ	Flux. Angle of lag or lead.
Chi	X	χ	Reactance.
Psi	Ψ	ψ	Angular velocity in time. Phase difference. Dielectric flux
Omega	Ω	ω	Resistance in ohms. Resistance in megohms. $2\pi F$. Angular velocity.

Representative Circuits for Amplifier Tables

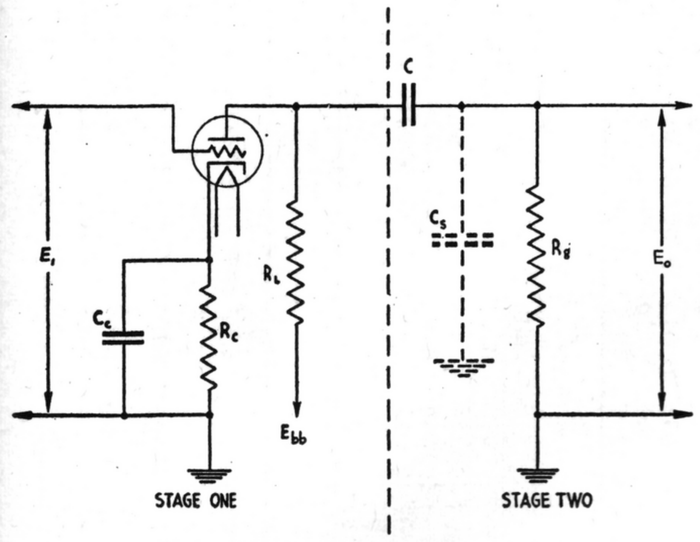

FIGURE A

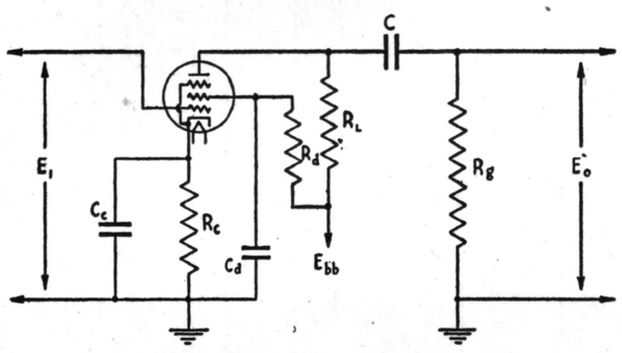

FIGURE B

Frequency Characteristic of Single-Stage Resistance-Coupled Triode Amplifier

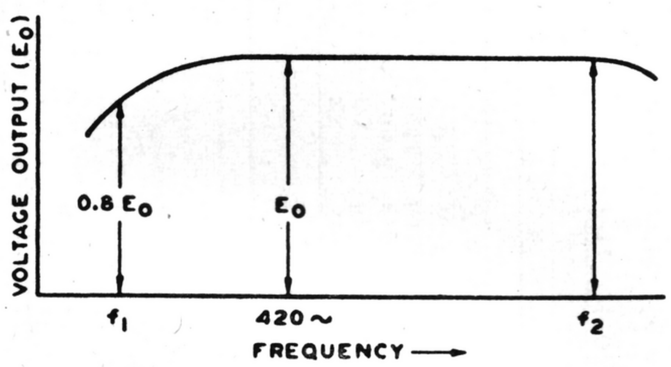

A. Condensers C and C_c have been chosen to give output voltages equal to 0.8 E_o for f_1 of 100 cycles. For any other value of f_1 multiply values of C and C_c by $100/f_1$.

In the case of condenser C_c, the values shown are for an amplifier with DC heater excitation. When AC is used, depending on the character of the associated circuits, the gain, and the value of f_1, it may be necessary to increase the value of C_c to minimize hum-disturbances. It may also be desirable to have a DC potential difference of approximately 10 volts between heater and cathode

B. f_2 = frequency at which high-frequency response begins to fall off.

C. The voltage output at f_1 for n like stages equals $(0.8\ E)_o{}^n$.

D. Decoupling filters are not necessary for two stages or less.

E. For an amplifier of typical construction, the value of f_2 is well above the audio-frequency range for any value of R_L.

F. Always use highest permissible value of R_g.

G. A variation of ±10% in values of resistors and condensers has only slight effect on performance.

SEE FIGURE A

Frequency Characteristic of Single-Stage Resistance-Coupled Pentode Amplifier

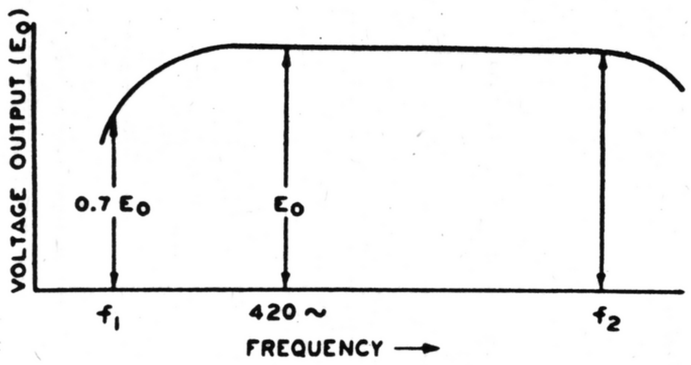

A. Condensers C, C_c and D_d have been chosen to give output voltages equal to 0.7 E_o for f_1 of 100 cycles. For any other value of f_1, multiply values of C, C_c, and C_d by $100/f_1$.

In the case of condenser C_c, the values shown are for an amplifier with DC heater excitation. When AC is used, depending on the character of the associated circuits, the gain, and the value of f_1, it may be necessary to increase the value of C_c to minimize hum disturbances. It may also be desirable to have a DC potential difference of approximately 10 volts between heater and cathode.

B. f_2 = frequency at which high-frequency response begins to fall off.

C. The voltage output at f_1 for n like stages equals $(0.7\ E_o)^n$.

D. Decoupling filters are not necessary for two stages or less.

E. For an amplifier of typical construction, approximate values of f_2 for different values of R_L are:

R_L	f_2
0.1 Meg.	20000 cps.
0.25 Meg.	10000 cps.
0.5 Meg.	5000 cps.

F. Always use highest permissible value of R_g.

G. A variation of ±10% in values of resistors and condensers has only slight effect on performance.

SEE FIGURE B

Twin-Triode Diagram with Legend

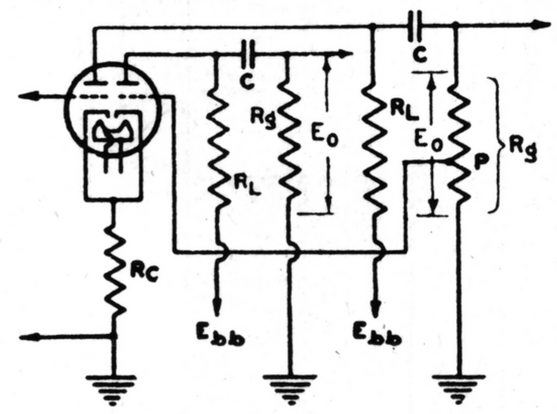

Frequency Characteristic of Resistance-Coupled Twin-Triode Amplifier

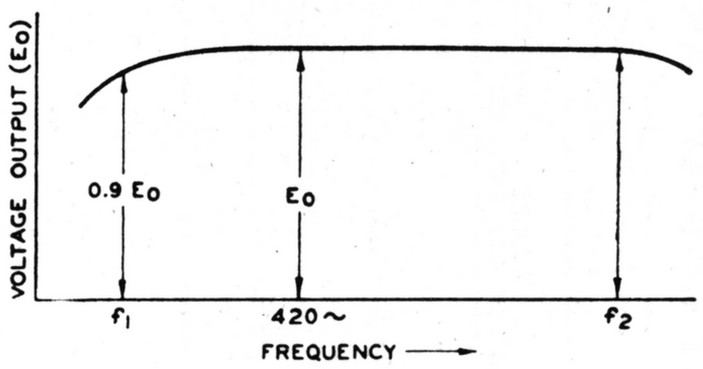

The diagram given above is for Phase-Inverter Service. The signal input is supplied to the grid of the left-hand triode unit. The grid of the right-hand unit obtains its signal from a tap (P) on the grid resistor (R_g) in the output circuit of the left-hand triode unit. The tap (P) is chosen as so to make the voltage output of the right-hand unit equal to that of the left-hand unit. Its location is determined from the voltage gain values given in the Chart. For example, if the value of voltage gain is 20 (from the Chart), (P) is chosen so as to supply 1/20 of the voltage across (R_g) to the grid of the right-hand triode.

For phase-inverter service, the cathode resistor (R_c) should not be by-passed by a condenser. Omission of the condenser in this service assists in balancing the output voltages. With twin triodes having a common cathode terminal, the value of R_c is specified on the basis that both units are operating simultaneously at the same values of plate load and plate voltage.

RESISTANCE COUPLED AMPLIFIER CHART

C = Blocking Condenser (μf)
Cc = Cathode By-pass Condenser (μf)
Cd = Screen By-pass Condenser (μf)
Ebb = Plate-Supply Voltage (Volts)
Eo = Voltage Output (Peak Volts)
Rc = Cathode Resistor (Ohms)
Rd = Screen Resistor (Megohms)
Rg = Grid Resistor (Megohms)
RL = Plate Resistor (Megohms)
V.G. = Voltage Gain

TABLE I—TRIODES

6A6 see 6N7

6C5 (Also 6C6, 6J7, 6W7, 12J7, and 57 as Triodes)

Ebb[1]	90									180									300									Ebb[1]
RL	0.05			0.1			0.25			0.05			0.1			0.25			0.05			0.1			0.25			RL
Rg[2]	0.05	0.1	0.25	0.1	0.25	0.5	0.25	0.5	1	0.05	0.1	0.25	0.1	0.25	0.5	0.25	0.5	1	0.05	0.1	0.25	0.1	0.25	0.5	0.25	0.5	1	Rg[2]
Rc	2800	3400	3800	4800	6400	7500	11400	14500	17300	2200	2700	3100	3900	5300	6200	9500	12300	14700	2100	2600	3100	3800	5300	6000	9600	12300	14000	Rc
Cc	2	1.62	1.3	1.12	0.84	0.66	0.52	0.4	0.33	2.2	2.1	1.85	1.7	1.25	1.2	0.74	0.55	0.47	3.16	2.3	2.2	1.7	1.3	1.17	0.9	0.59	0.37	Cc
C	0.05	0.025	0.01	0.025	0.01	0.005	0.01	0.006	0.004	0.055	0.03	0.015	0.035	0.015	0.008	0.015	0.008	0.004	0.075	0.04	0.015	0.035	0.015	0.008	0.015	0.008	0.003	C
Eo[3]	14	17	20	16	22	23	18	23	26	34	45	54	41	54	55	44	52	59	57	70	83	65	84	88	73	85	97	Eo[3]
V.G.[4]	9	9	10	10	11	12	12	12	13	10	11	11	12	12	13	13	13	13	11	11	12	12	13	13	13	14	14	V.G.[4]

6C8‡‡

Ebb[1]	90			180					300			Ebb[1]
RL	0.1	0.25	0.5	0.1	0.25			0.5	0.1	0.25	0.5	RL
Rg[2]	0.25	0.5	1.0	0.25	0.25	0.5	1	1	0.25	0.5	1	Rg[2]
Rc	3700	7870	15000	3080	5170	6560	7550	12500	2840	6100	11500	Rc
Cc	1.48	0.81	0.43	1.84	1.25	0.95	0.85	0.5	2.01	0.96	0.48	Cc
C	0.0115	0.0065	0.0035	0.012	0.012	0.007	0.0035	0.004	0.013	0.0065	0.004	C
Eo[3]	17	19	20	40	35	45	50	44	73	80	83	Eo[3]
V.G.[4]	20	23	24	22	24	25	26	26	23	26	27	V.G.[4]

6F5, 6SF5, 12F5, 12SF5

Ebb[1]	90									180									300									Ebb[1]
RL	0.1			0.25			0.5			0.1			0.25			0.5			0.1			0.25			0.5			RL
Rg[2]	0.1	0.25	0.5	0.25	0.5	1	0.5	1	2	0.1	0.25	0.5	0.25	0.5	1.0	0.5	1	2	0.1	0.25	0.5	0.25	0.5	1	0.5	1	2.0	Rg[2]
Rc	4400	4800	5000	8000	8800	9000	12200	13500	14700	1800	2000	2200	3500	4100	4500	6100	6900	7700	1300	1600	1700	2600	3200	3500	4500	5400	6100	Rc
Cc	2.5	2.1	1.8	1.33	1.18	0.9	0.76	0.67	0.58	4.4	3.3	2.9	2.3	1.8	1.7	1.3	0.9	0.83	5	3.7	3.2	2.5	2.1	2	1.5	1.2	0.93	Cc
C	0.02	0.01	0.005	0.01	0.005	0.003	0.005	0.003	0.0015	0.025	0.015	0.006	0.01	0.006	0.004	0.006	0.003	0.0015	0.025	0.01	0.006	0.01	0.007	0.004	0.006	0.004	0.002	C
Eo[3]	4	5	6	6	7	10	8	10	12	16	23	25	21	26	32	24	33	37	33	43	48	41	54	63	50	62	70	Eo[3]
V.G.[4]	28d	34b	35c	39b	43c	44	43	46	48	37	44	46	48	53	57	53	63	66	42	49	52	56	63	67	65	70	70	V.G.[4]

6F8G (One Triode Unit)‡‡, 6J5, 12J5

Ebb[1]	90			180				300			Ebb[1]
RL	0.05	0.1	0.25	0.05	0.1		0.25	0.05	0.1	0.25	RL
Rg[2]	0.1	0.25	0.5	0.1	0.1	0.25	0.5	0.1	0.25	0.5	Rg[2]
Rc	2070	3940	9760	1490	2330	2830	3230	7000	1270	2440	5770	Rc
Cc	2.66	1.29	0.55	2.86	2.19	1.35	1.15	0.62	2.96	1.42	0.64	Cc
C	0.029	0.012	0.007	0.032	0.038	0.012	0.006	0.007	0.034	0.0125	0.0075	C
Eo[3]	14	17	18	30	26	34	38	36	51	56	57	Eo[3]
V.G.[4]	12	13	13	17	14	14	14	14	14	14	14	V.G.[4]

6J5 see 6F8G

6L5G

Ebb[1]	90									180									300									Ebb[1]
RL	0.05			0.1			0.25			0.05			0.1			0.25			0.05			0.1			0.25			RL
Rg[2]	0.05	0.1	0.25	0.1	0.25	0.5	0.25	0.5	1.0	0.05	0.1	0.25	0.1	0.25	0.5	0.25	0.5	1.0	0.05	0.1	0.25	0.1	0.25	0.5	0.25	0.5	1.0	Rg[2]
Rc	2120	2500	2900	3510	4620	5200	8050	10300	12100	1810	2240	2660	3180	4200	4790	7100	9290	10950	1740	2160	2600	3070	4140	4700	6900	9100	10750	Rc
Cc	2.3	1.85	1.65	1.36	1.08	1	0.61	0.49	0.42	2.9	2.2	1.8	1.46	1.1	1	0.7	0.54	0.46	2.91	2.18	1.82	1.64	1.1	0.81	0.57	0.46	0.4	Cc
C	0.05	0.03	0.014	0.03	0.015	0.0085	0.0125	0.0085	0.0055	0.06	0.03	0.014	0.03	0.0145	0.009	0.014	0.009	0.0055	0.06	0.032	0.015	0.032	0.014	0.0075	0.013	0.0075	0.005	C
Eo[3]	14	17.8	21	16	21.5	23	17.5	21.5	23.6	32	41	46	36	45.5	50	38	46	52	56	68	79	60	79	89	64	80	88	Eo[3]
V.G.[4]	9.3	10.4	10.9	11	11.7	12	11.8	11.9	12	10.4	11.1	11.5	11.6	12.1	12.3	12.1	12.4	12.5	10.9	11.6	11.9	12.1	12.7	12.9	13	12.9	12.8	V.G.[4]

6N7‡, 6A6‡, 53‡

Ebb[1]	90									180									300									Ebb[1]
RL	0.1			0.25			0.5			0.1			0.25			0.5			0.1			0.25			0.5			RL
Rg[2]	0.1	0.25	0.5	0.25	0.5	1	0.5	1	2	0.1	0.25	0.5	0.25	0.5	1	0.5	1	2	0.1	0.25	0.5	0.25	0.5	1	0.5	1	2	Rg[2]
Rc*	1900	2250	2500	4050	4950	5400	7000	8500	9650	1300	1700	1950	2950	3800	4300	5250	6600	7650	1150	1500	1750	2650	3400	4000	4850	6100	7150	Rc*
C	0.025	0.1	0.006	0.01	0.006	0.003	0.006	0.003	0.0015	0.03	0.015	0.007	0.015	0.007	0.0035	0.007	0.0035	0.002	0.03	0.015	0.007	0.015	0.0055	0.003	0.0055	0.003	0.0015	C
Eo[3]	13	19	20	16	20	24	18	23	26	35	46	50	40	50	57	44	54	61	60	83	86	75	87	100	76	94	104	Eo[3]
V.G.[4]	16	19	20	20	22	23	22	23	23	19	21	22	23	24	24	24	25	25	20	22	23	23	24	24	23	24	24	V.G.[4]

6P5, 56, 76

Ebb[1]	90									180									300									Ebb[1]
RL	0.05			0.1			0.25			0.05			0.1			0.25			0.05			0.1			0.25			RL
Rg[2]	0.05	0.1	0.25	0.1	0.25	0.5	0.25	0.5	1	0.05	0.1	0.25	0.1	0.25	0.5	0.25	0.5	1	0.05	0.1	0.25	0.1	0.25	0.5	0.25	0.5	1	Rg[2]
Rc*	2500	3200	3800	4500	6500	7500	11100	15100	18300	2400	3000	3700	4500	6500	7600	10700	14700	17700	2400	3100	3800	4500	6400	7500	11100	15200	18300	Rc*
Cc	2	1.6	1.25	1.05	0.82	0.68	0.48	0.36	0.32	2.5	1.9	1.65	1.45	0.97	0.8	0.6	0.45	0.4	2.8	2.2	1.8	1.6	1.2	0.98	0.69	0.5	0.4	Cc
C	0.06	0.03	0.015	0.03	0.015	0.007	0.015	0.007	0.0035	0.06	0.035	0.015	0.035	0.015	0.008	0.015	0.007	0.0045	0.08	0.045	0.02	0.04	0.02	0.009	0.02	0.009	0.005	C
Eo[3]	16	21	23	19	23	25	21	24	28	36	48	55	45	55	57	49	59	64	65	80	95	74	95	104	82	96	108	Eo[3]
V.G.[4]	7	7.7	8.1	8.1	8.9	9.3	9.4	9.7	9.8	7.7	8.2	9	9.3	9.5	9.8	9.7	10	10	8.3	8.9	9.4	9.5	10	10	10	10	10	V.G.[4]

RESISTANCE COUPLED AMPLIFIER CHART

C = Blocking Condenser (μf)
Cc = Cathode By-pass Condenser (μf)
Cd = Screen By-pass Condenser (μf)
Ebb = Plate-Supply Voltage (Volts)
Eo = Voltage Output (Peak Volts)
Rc = Cathode Resistor (Ohms)
Rd = Screen Resistor (Megohms)
Rg = Grid Resistor (Megohms)
RL = Plate Resistor (Megohms)
V.G. = Voltage Gain

6SC7‡, 12SC7‡

Ebb[1]	90			180				300			
RL	0.1	0.25	0.5	0.1	0.25		0.5	0.1	0.25	0.5	Ebb[1]
Rg[2]	0.25	0.5	1	0.25	0.5	1	1	0.25	0.5	1	RL
Rc*	1960	3750	6300	1070	1850	2150	2400	930	1680	2980	Rg[2]
C	0.012	0.006	0.003	0.012	0.011	0.006	0.003	0.014	0.006	0.003	Rc*
Eo[3]	5.9	8.6	10	24	21	28	32	50	55	62	C
V.G.[4]	23	30	33	29	35	39	41	43	34	42	48	Eo[3]
											V.G.[4]

6SF5 see 6F5

6Z7G‡

Ebb[1]	90			180				300			
RL	0.1	0.25	0.5	0.1	0.25		0.5	0.1	0.25	0.5	Ebb[1]
Rg[2]	0.25	0.5	1	0.25	0.5	1	1	0.25	0.5	1	RL
Rc*	1760	3390	6050	1100	1820	2110	2400	950	1680	3110	Rg[2]
Cc	2.02	1.1	0.61	2.6	1.71	1.38	1.1	2.63	1.46	0.72	Rc*
C	0.0115	0.006	0.003	0.0115	0.012	0.007	0.0035	0.012	0.006	0.0035	Cc
Eo[3]	11	15	18	28	28	34	41	52	59	70	C
V.G.[4]	25	30	33	31	35	38	39	34	40	44	Eo[3]
											V.G.[4]

12SF5 see 6F5 **12J5** see 6F8G **12SC7** see 6SC7 **53** see 6N7 **56, 76** see 6P5

79‡

Ebb[1]	90									180									300									
RL	0.1			0.25			0.5			0.1			0.25			0.5			0.1			0.25			0.5			Ebb[1]
Rg[2]	0.1	0.25	0.5	0.25	0.5	1	0.5	1	2	0.1	0.25	0.5	0.25	0.5	1	0.5	1	2	0.1	0.25	0.5	0.25	0.5	1	0.5	1	2	RL
Rc*	2050	2200	2350	4000	4250	4650	6150	6850	7500	1050	1250	1350	2050	2450	2750	3450	4100	4650	800	1000	1100	1650	2050	2350	2850	3600	4450	Rg[2]
C	0.04	0.015	0.009	0.015	0.006	0.004	0.006	0.004	0.002	0.04	0.02	0.009	0.02	0.01	0.005	0.009	0.0035	0.002	0.025	0.01	0.006	0.01	0.0055	0.003	0.0055	0.003	0.0015	Rc*
Eo[3]	5.8	8.4	9.5	7.1	9.7	12	8.8	12	15	21	27	31	26	34	40	30	39	44	40	57	60	56	66	77	61	75	82	C
V.G.[4]	23b	29c	29	31c	33	35	34	38	40	27	31	34	37	41	42	42	44	45	29	34	36	39	42	43	44	46	46	Eo[3]
																												V.G.[4]

TABLE II—DIODE-TRIODES
2A6, 6B6, 6SQ7, 12SQ7, 75

Ebb[1]	90									180									300									
RL	0.1			0.25			0.5			0.1			0.25			0.5			0.1			0.25			0.5			Ebb[1]
Rg[2]	0.1	0.25	0.5	0.25	0.5	1	0.5	1	2	0.1	0.25	0.5	0.25	0.5	1	0.5	1	2	0.1	0.25	0.5	0.25	0.5	1	0.5	1	2	RL
Rc	6300	6600	6700	10000	11000	11500	16200	16600	17400	2600	2900	3000	4300	4800	5300	7000	8000	8800	1900	2200	2300	3300	3900	4200	5300	6100	7000	Rg[2]
Cc	2.2	1.7	1.7	1.24	1.07	0.9	0.75	0.7	0.65	3.3	2.9	2.7	2.1	1.8	1.5	1.3	1.1	0.9	4	3.5	3	2.7	2	1.8	1.6	1.3	1.2	Rc
C	0.02	0.01	0.006	0.01	0.006	0.003	0.005	0.003	0.0015	0.025	0.015	0.007	0.015	0.007	0.004	0.007	0.004	0.002	0.03	0.015	0.007	0.015	0.007	0.004	0.007	0.004	0.002	Cc
Eo[3]	3	5	6	5	7	10	7	10	13	16	22	23	21	28	33	25	33	38	31	41	45	42	51	60	47	62	67	C
V.G.[4]	23d	29b	31c	34b	40c	40	39	44	48	29	36	37	43	50	53	52	57	58	31	39	42	48	53	56	58	60	63	Eo[3]
																												V.G.[4]

6B6 see 2A6

6Q7, 12Q7

Ebb[1]	90									180									300									
RL	0.1			0.25			0.5			0.1			0.25			0.5			0.1			0.25			0.5			Ebb[1]
Rg[2]	0.1	0.25	0.5	0.25	0.5	1	0.5	1	2	0.1	0.25	0.5	0.25	0.5	1	0.5	1	2	0.1	0.25	0.5	0.25	0.5	1	0.5	1	2	RL
Rc	4000	4200	4300	7200	7600	8000	11500	12300	13700	1600	1900	2100	3400	4000	4500	6000	7100	7900	1200	1500	1700	2600	3000	3600	4600	5500	6200	Rg[2]
Cc	2.07	1.7	1.5	1.17	1.2	0.9	0.72	0.6	0.45	3	2.5	2.3	1.6	1.3	1.05	0.86	0.76	0.63	4.4	3.6	3.05	2.4	1.66	1.45	1.2	0.9	0.9	Rc
C	0.02	0.01	0.005	0.01	0.006	0.003	0.006	0.003	0.0015	0.02	0.01	0.005	0.01	0.005	0.003	0.006	0.003	0.002	0.03	0.015	0.007	0.015	0.007	0.004	0.007	0.004	0.002	Cc
Eo[3]	5	8	9	8	11	13	9	13	17	19	26	29	25	31	37	30	36	41	35	52	53	43	52	62	47	60	66	C
V.G.[4]	23a	28b	29c	31b	32	33	31	33	37	28	33	35	36	38	40	39	40	41	34	39	40	42	45	45	45	46	47	Eo[3]
																												V.G.[4]

6R7

Ebb[1]	90									180									300									
RL	0.05			0.1			0.25			0.05			0.1			0.25			0.05			0.1			0.25			Ebb[1]
Rg[2]	0.05	0.1	0.25	0.1	0.25	0.5	0.25	0.5	1	0.05	0.1	0.25	0.1	0.25	0.5	0.25	0.5	1	0.05	0.1	0.25	0.1	0.25	0.5	0.25	0.5	1	RL
Rc	2300	2600	2900	3500	4400	5000	7600	9800	11300	1700	2100	2500	3000	4100	4600	6700	8800	10000	1600	2000	2400	2900	3800	4400	6300	8400	10600	Rg[2]
Cc	2	1.7	1.27	1.2	0.9	0.77	0.54	0.42	0.38	2.3	1.9	1.5	1.3	0.9	0.8	0.54	0.4	0.33	2.6	2	1.6	1.4	1.1	1	0.7	0.5	0.44	Rc
C	0.05	0.03	0.01	0.03	0.01	0.006	0.015	0.007	0.003	0.05	0.03	0.01	0.03	0.01	0.006	0.01	0.006	0.003	0.055	0.03	0.015	0.03	0.015	0.007	0.015	0.007	0.004	Cc
Eo[3]	14	18	20	15	19	21	15	18	21	31	40	45	35	43	46	33	40	47	50	62	71	52	68	71	54	62	74	C
V.G.[4]	8	9	10	10	10	11	10	11	11	9	9	10	10	10	10	10	10	11	9	9	10	10	10	10	10	11	11	Eo[3]
																												V.G.[4]

6SQ7 see 2A6

6T7G

Ebb[1]	90									180									300									
RL	0.1			0.25			0.5			0.1			0.25			0.5			0.1			0.25			0.5			Ebb[1]
Rg[2]	0.1	0.25	0.5	0.25	0.5	1	0.5	1	2	0.1	0.25	0.5	0.25	0.5	1	0.5	1	2	0.1	0.25	0.5	0.25	0.5	1	0.5	1	2	RL
Rc	4350	4750	5050	7500	8300	9000	12500	14200	15500	2420	2830	3080	4410	5220	5920	7250	9440	10850	1950	2400	2640	3760	4580	5220	6570	8200	9600	Rg[2]
Cc	1.8	1.5	1.43	1.12	1	0.88	0.67	0.6	0.54	2.55	2.25	2	1.5	1.25	1.11	0.91	0.74	0.6	2.85	2.55	2.25	1.57	1.35	1.23	1.02	0.82	0.7	Rc
C	0.023	0.012	0.007	0.012	0.0075	0.005	0.0065	0.0045	0.0035	0.023	0.0135	0.008	0.012	0.008	0.005	0.007	0.0045	0.0035	0.0245	0.0135	0.008	0.012	0.0075	0.005	0.008	0.0055	0.004	Cc
Eo[3]	5.6	7.8	8.5	7.7	10.2	11.5	9.4	12.3	13.2	21	28.5	31.6	27	33.8	38.5	31	39	42.6	43.7	58	64	57	69	80	62	76.5	85.5	C
V.G.[4]	20.3b	24b	25	28.2c	30	31.6	30.5	32.9	34.2	23.7	28.4	30.6	33.7	36.4	38	38.4	40.5	41	26.5	31.9	33.2	36.6	40	41	41.5	43.3	44	Eo[3]
																												V.G.[4]

12Q7 see 6Q7 **12SQ7** see 2A6

RESISTANCE COUPLED AMPLIFIER CHART

C = Blocking Condenser (μf)
Cc = Cathode By-pass Condenser (μf)
Cd = Screen By-pass Condenser (μf)
Ebb = Plate-Supply Voltage (Volts)
Eo = Voltage Output (Peak Volts)
Rc = Cathode Resistor (Ohms)
Rd = Screen Resistor (Megohms)
Rg = Grid Resistor (Megohms)
RL = Plate Resistor (Megohms)
V.G. = Voltage Gain

55, 85

Ebb[1]	90									180									300									Ebb[1]
RL	0.05			0.1			0.25			0.05			0.1			0.25			0.05			0.1			0.25			RL
Rg[2]	0.05	0.1	0.25	0.1	0.25	0.5	0.25	0.5	1	0.05	0.1	0.25	0.1	0.25	0.5	0.25	0.5	1	0.05	0.1	0.25	0.1	0.25	0.5	0.25	0.5	1	Rg[2]
Rc	3800	4600	5400	6620	9000	10300	15100	20500	24400	3200	4100	5000	6200	8700	10000	14500	20000	24000	3200	4100	5100	5900	8300	9600	14300	19400	23600	Rc
Cc	1.4	1.1	0.86	0.7	0.55	0.5	0.31	0.25	0.2	1.8	1.6	1.2	0.9	0.7	0.57	0.43	0.29	0.24	1.9	1.5	1.2	0.8	0.54	0.43	0.3	0.22	0.2	Cc
C	0.06	0.03	0.015	0.04	0.015	0.007	0.015	0.007	0.004	0.06	0.045	0.02	0.04	0.015	0.008	0.015	0.008	0.004	0.08	0.045	0.015	0.03	0.015	0.006	0.01	0.006	0.003	C
Eo[3]	16	19	23	17	22	25	18	23	26	33	44	49	37	47	50	40	48	53	50	74	85	64	82	88	71	84	94	Eo[3]
V.G.[4]	4.5	4.9	5.1	5.1	5.4	5.5	5.3	5.5	5.6	4.9	5.2	5.3	5.3	5.5	5.5	5.6	5.7	5.7	5.2	5.5	5.6	5.5	5.7	5.8	5.7	5.7	5.8	V.G.[4]

75 see 2A6 **85 see 55**

TABLE III—PENTODES

6C6, 6J7, 57

Ebb[1]	90									180									300									Ebb[1]
RL	0.1			0.25			0.5			0.1			0.25			0.5			0.1			0.25			0.5			RL
Rg[2]	0.1	0.25	0.5	0.25	0.5	1	0.5	1	2	0.1	0.25	0.5	0.25	0.5	1	0.5	1	2	0.1	0.25	0.5	0.25	0.5	1	0.5	1	2	Rg[2]
Rd	0.37	0.44	0.44	1.1	1.18	1.4	2.18	2.6	2.7	0.44	0.5	0.5	1.1	1.18	1.4	2.45	2.9	2.7	0.44	0.5	0.53	1.18	1.18	1.45	2.45	2.9	2.95	Rd
Rc	1200	1100	1300	2400	2600	3600	4700	5500	5500	1000	750	800	1200	1600	2000	2600	3100	3500	500	450	600	1100	1200	1300	1700	2200	2300	Rc
Cd	0.05	0.05	0.05	0.03	0.03	0.025	0.02	0.05	0.02	0.05	0.05	0.05	0.04	0.04	0.04	0.03	0.025	0.02	0.07	0.07	0.06	0.04	0.04	0.05	0.04	0.04	0.04	Cd
Cc	5.2	5.3	4.8	3.7	3.2	2.5	2.3	2	2	6.5	6.7	6.7	5.2	4.3	3.8	3.2	2.5	2.8	8.5	8.3	8	5.5	5.4	5.8	4.2	4.1	4	Cc
C	0.02	0.01	0.006	0.008	0.005	0.003	0.005	0.0025	0.0015	0.02	0.01	0.006	0.008	0.005	0.0035	0.005	0.0025	0.0015	0.02	0.01	0.006	0.008	0.005	0.005	0.005	0.003	0.0025	C
Eo[3]	17	22	33	23	32	33	28	29	27	42	52	59	41	60	60	45	56	60	55	81	96	81	104	110	75	97	100	Eo[3]
V.G.[4]	41	55	66	70	85	92	93	120	140	51	69	83	93	118	140	135	165	165	61	82	94	104	140	185	161	350	240	V.G.[4]

6J7 see 6C6

6S7

Ebb[1]	90									180									300									Ebb[1]
RL	0.1			0.25			0.5			0.1			0.25			0.5			0.1			0.25			0.5			RL
Rg[2]	0.1	0.25	0.5	0.25	0.5	1	0.5	1	2	0.1	0.25	0.5	0.25	0.5	1	0.5	1	2	0.1	0.25	0.5	0.25	0.5	1	0.5	1	2	Rg[2]
Rd	0.59	0.65	0.7	1.5	1.6	1.7	3.2	3.5	3.7	0.58	0.68	0.71	1.6	1.8	1.9	3.3	3.6	3.8	0.59	0.67	0.71	1.7	1.95	2.1	3.6	3.9	4.1	Rd
Rc	870	900	910	1440	1520	1560	2620	2800	3000	530	540	540	850	890	950	1410	1520	1600	430	440	440	620	650	700	1000	1080	1120	Rc
Cd	0.065	0.061	0.057	0.044	0.044	0.043	0.029	0.03	0.031	0.073	0.07	0.065	0.05	0.044	0.046	0.041	0.037	0.031	0.077	0.071	0.071	0.058	0.057	0.055	0.04	0.041	0.043	Cd
Cc	5.1	5	4.58	3.38	3.23	3.22	2.04	1.95	1.92	7.2	6.9	6.6	4.6	4.7	4.4	3.5	3	2.9	8.5	8	8	6	5.8	5.2	4.1	3.9	3.8	Cc
C	0.018	0.01	0.007	0.007	0.0055	0.004	0.004	0.0026	0.0024	0.017	0.01	0.0063	0.0071	0.005	0.0037	0.0041	0.003	0.0024	0.0167	0.01	0.0066	0.0071	0.005	0.0036	0.0037	0.0029	0.002	C
Eo[3]	16	20.5	22.5	13.7	18	19	12	15.4	16.4	33	43	48	32.5	39.5	44	30	37.5	41.5	57	75	82	54	66	76	52	66	73	Eo[3]
V.G.[4]	33.3	46.5	53.5	55.5	66.5	77	69.5	84	93.5	47.4	66	75	79	104	118	109	134	147	57	78	89	98	122	136	136	162	174	V.G.[4]

6SJ7, 12SJ7

Ebb[1]	90			180					300			Ebb[1]
RL	0.1	0.25	0.5	0.1	0.25			0.5	0.1	0.25	0.5	RL
Rg[2]	0.25	0.5	1	0.25	0.25	0.5	1	1	0.25	0.5	1	Rg[2]
Rd	0.29	0.92	1.7	0.31	0.83	0.94	0.94	2.2	0.37	1.10	2.2	Rd
Rc	880	1700	3800	800	1050	1060	1100	2180	530	860	1410	Rc
Cd	0.085	0.045	0.03	0.09	0.06	0.06	0.07	0.04	0.09	0.06	0.05	Cd
Cc	7.4	4.5	2.4	8	6.8	6.6	6.1	3.8	10.9	7.4	5.8	Cc
C	0.016	0.005	0.002	0.005	0.001	0.004	0.003	0.002	0.016	0.004	0.002	C
Eo[3]	23	18	22	60	38	47	54	44	96	88	79	Eo[3]
V.G.[4]	68	93	119	82	109	131	161	192	98	167	238	V.G.[4]

12SJ7 see 6SJ7 **57 see 6C6**

TABLE IV—DIODE PENTODES

2B7, 6B7, 6B8, 12C8

Ebb[1]	90									180									300									Ebb[1]
RL	0.1			0.25			0.5			0.1			0.25			0.5			0.1			0.25			0.5			RL
Rg[2]	0.1	0.25	0.5	0.25	0.5	1	0.5	1	2	0.1	0.25	0.5	0.25	0.5	1	0.5	1	2	0.1	0.25	0.5	0.25	0.5	1	0.5	1	2	Rg[2]
Rd	0.37	0.5	0.6	1.18	1.1	1.35	2.6	2.8	2.9	0.44	0.5	0.6	1.18	1.2	1.5	2.6	2.8	3	0.5	0.55	0.6	1.2	1.2	1.5	2.7	2.9	3.4	Rd
Rc	2000	2200	2000	3500	3500	3500	5000	6000	6200	1000	1200	1200	1900	2100	2200	3300	3500	3500	950	1100	900	1500	1600	1800	2400	2500	2800	Rc
Cd	0.07	0.07	0.06	0.04	0.04	0.04	0.04	0.04	0.04	0.08	0.08	0.07	0.05	0.06	0.05	0.04	0.04	0.4	0.09	0.09	0.08	0.06	0.06	0.08	0.05	0.05	0.05	Cd
Cc	3	3	2.8	1.9	2.1	1.9	1.5	1.55	1.5	4.4	4.4	4	2.7	3.2	3	2.1	2	2.2	4.6	5	4.8	3.2	3.5	4	2.5	2.3	2.8	Cc
C	0.02	0.01	0.006	0.008	0.007	0.003	0.004	0.003	0.003	0.02	0.015	0.008	0.01	0.007	0.003	0.005	0.003	0.002	0.025	0.015	0.009	0.015	0.008	0.004	0.006	0.003	0.0025	C
Eo	19	28	29	26	33	32	22	29	27	30	52	53	39	55	53	47	55	53	60	89	86	70	100	95	80	120	90	Eo[3]
V.G.[4]	24	33	37	43	55	65	63	85	100	30	41	46	55	69	83	81	115	116	36	47	54	64	79	100	96	150	145	V.G.[4]

PENTODES AS TRIODES—6C6, 6J7, 6W7, 12J7, and 57 see 6C5 under TRIODES

[1] Voltage at plate equals Plate-Supply Voltage minus voltage in RL and Rc. For other supply voltages differing as much as 50% from those listed, the values of resistors, condensers, and gain are approximately correct. The value of voltage output, however, for any of these other supply voltages equals the listed voltage output multiplied by the new plate-supply voltage, divided by the plate-supply voltage corresponding to the listed voltage output.

[2] For following stage (see Circuit Diagrams page 365).

[3] Voltage across Rg at grid-current point.

[4] Voltage Gain at 5 volts (RMS) output unless index letter indicates otherwise.

a At 2 volts (RMS) output.
b At 3 volts (RMS) output.
c At 4 volts (RMS) output.
d At 2.2 volts (RMS) output.
* See NOTES under TWIN-TRIODE DIAGRAM on page 365.
‡ The cathodes of these twin units have a common terminal, and the cathode resistor values listed are based on both tube sections operating under similar conditions.
‡‡ The cathodes of these twin units have separate terminals.

• *Section* 13

THE MYE TECHNICAL MANUAL

Receiving Tube Characteristics

P. R. MALLORY & CO., Inc.
MALLORY

RECEIVING TUBE CHARACTERISTICS

● This chapter represents a complete revision and modernization of the original Supplement 1 to the 3rd Edition MYE, issued in October, 1939. Important revisions of the ratings of older tubes have been incorporated, and listings of 95 new tubes have been added.

The fact that less than 100 new types can be added to our listings after over two years of radio progress is indeed remarkable in view of the progress of the vacuum tube art. A common sense viewpoint by the tube manufacturers has kept the tube types from multiplying endlessly and aimlessly. There will always be new tube types, but the important point now seems to be that new tube types are added only when good and definite reasons justify their existence.

To the reader there are advantages in technical literature prepared by organizations not directly connected with an industry, because the viewpoint can be more objective and dispassionate. Furthermore, the disinterested observer can frequently discern trends which may not be so apparent to those more intimately associated with the art. It is difficult for an outsider however to assign credit where credit is due when policies for the improvement of an industry are promulgated.

Great credit is due to the various tube manufacturers for their tube standardization programs which by united action have prevented or eliminated many duplicating or overlapping tube types. This policy, originated during peace times, has been expanded during the war, and there is every reason to anticipate that many of the little used or obsolete tube types will be discontinued. The restriction of tube types provides great benefits to the distributor, dealer, and serviceman by limiting inventory; but may provide a headache to many servicemen since tube replacements in some sets may involve the installation of new tube sockets, the use of different cathode bias resistors, and realigning.

Advancement of the Art

The most noteworthy advancement of the art, and the only complete new "line" of tubes to report since the issuance of our previous tube supplement is the new miniature battery tube line—ultra small tubes only ¾″ in diameter with an envelope height of 1⅞″. These tubes have a glass button 7-pin base.

These tubes represent a new achievement so far as size is concerned and have made possible the extremely compact "personal" sets now in every radio manufacturer's line. The performance of these tubes is somewhat improved over that of the regular 1.4 volt tubes particularly in the case of the 1R5 converter. This type is a much stronger oscillator than the 1A7GT and will operate at frequencies well above what can be done with the 1A7GT. Because of this fact this type has been used in a number of all-wave household battery sets.

Since the previous supplement "Lock-In" line shave been increased in scope so that tubes of this construction are available to duplicate the metal or "GT" functions. Likewise the introduction of single-end metal tubes was followed by the introduction of interchangeable single-end GT types. Receiver manufacturers have been urged to design sets so as to use either metal or GT and in most cases this is possible. In view of present conditions on materials such practice seems even more desirable at this time.

Other trends in the past year and a half are the increased use of 12-volt 150-milliampere types for A.C.-D.C. receivers, and the addition of 117-volt types to facilitate A.C. operation of battery receivers. Recently, the 45Z3, a tube of miniature size, was introduced to make possible this conversion of small-sized portable receivers. To a large extent, tube manufacturers have concentrated in the past year and a half on improving existing tube designs rather than bringing out new variations. This effort has resulted in improved overall quality, and in many cases, improved performance.

Metal tubes have been further improved and are now recognized to be of first line quality. Some of this has resulted from actual design changes and some of it from increased production on fewer types. The trend seems to be to use metal types in RF, IF, Detector and Audio Amplifier applications and to use "GT" rectifier and power output types.

An interesting development has been the designing of the high GM amplifier tubes with two-watt cathodes taking either 300 mils at 6.3 volts or 150 mils at 12.6 volts. The previous high GM tubes used three-watt cathodes taking 450 milliamperes at 6.3 volts.

The first of the high GM tubes was the 7H7 rated at approximately 4000 micromhos against 2000 for the SK7GT type. The 6SD7GT followed soon with slightly different characteristics than those of the 7H7 type. A metal tube with two cathode leads, the 6SG7, was recently announced, and is an example of a design having very low grid plate capacitances and high transconductance, features all beneficial to improved high-frequency performance.

The new high GM tubes are used as radio frequency amplifiers with untuned circuits and mixer tubes with a separate oscillator. The increase in gain with new high GM pentodes as amplifiers is about directly proportional to the increase in GM over the older tubes.

The high GM tubes as mixers though, have only about ⅓ the tube noise of the pentagrid type. The gain realizable with the new high GM tubes as a mixer is about three times that of the pentagrid type, thus the high GM type tube as a mixer will have three times the sensitivity of the pentagrid mixer tube for the same apparent noise.

The reduction of the number of metal types in mass production referred to previously was achieved by sales promotion and work with set engineers. Both RCA and Ken-Rad launched a program of so-called "Preferred" or "Recommended" Types in 1940 and this promotion has been highly successful. It has benefited every one all along the line. The tube manufacturer has been able to obtain lower costs and better quality on the higher production of these types, the set manufacturer has fewer types to stock and can use more uniform chassis design and even the dealers and servicemen appreciate the reduction in tube types.

A further step in this same direction has been the recent elimination of a number of "G" type tubes by changing to a "GT" construction entirely and double-marking it GT/G. This could not be done on types where shield cans were used as in RF or IF types with top caps.

A list of the combination types follows:

G/TG Double Etched Types

The following types have been listed by RMA as being double-etched and are of the T-9 or GT construction.

1A5GT/G	6P5GT/G	25A7GT/G
1C5GT/G	6N7GT/G	25L6GT/G
1G4GT/G	6V6GT/G	25Z6GT/G
1G6GT/G	6X5GT/G	25AC5GT/G
1Q5GT/G	6AC5GT/G	35L6GT/G
3Q5GT/G	6AE5GT/G	35Z5GT/G
5W4GT/G	6SQ7GT/G	50Y6GT/G
6H6GT/G	12SQ7GT/G	117Z6GT/G
6K6GT/G	25A6GT/G	

Additionally the following types have been officially released through RMA but may not be made by all tube manufacturers:

5Y3GT/G 5Z4GT/G
117L7GT/117M7GT

Bias Resistor Calculations

The serviceman often finds it necessary to replace the grid bias resistor in receivers employing a self-biasing arrangement for obtaining the proper grid voltage. When the resistance value is not known, it may be calculated by dividing the grid voltage required (at the plate voltage at which the tube is operating), by the plate current in amperes, plus the screen current in amperes, times the number of tubes passing current through the resistor.

Under this rule, the grid bias resistor value is given by the following formula:

$$R = \frac{E_{c1} \times 1{,}000}{(I_B + I_{c2})n}$$

where: R = Grid bias resistor value in ohms.

E_{c1} = The grid bias required in volts.

I_B = The plate current of a single tube in milliamperes.

I_{c2} = The screen grid current of a single tube in milliamperes.

n = The number of tubes passing current through the resistor.

Example—It is desired to determine the value of bias resistor used to obtain the proper value of grid bias on three type '35 tubes working in the radio frequency stages of a receiver. First, determine the plate and screen voltages employed in this set. Suppose, in this case, it is found that the plate supply voltage is 250 and the screen voltage is 90. Looking in the characteristics chart on page 374, it is found that the proper grid bias for the '35 under these conditions is —3.0 volts. In addition, the plate current is 6.5 milliamperes. The screen current is 2.5 milliamperes. Substituting in the formula,

$$R = \frac{3.0 \times 1{,}000}{(6.5 + 2.5)3} = 111 \text{ ohms}$$

The value of grid bias resistors can be calculated in this manner for any type and any number of tubes. In the case of triodes, the screen current term drops out entirely.

Be sure to determine the plate voltage at which the tubes are working, the number of tubes being supplied from the bias resistor, the screen voltage (if a tetrode or pentode), the correct value of grid bias voltage required (whether the tube cathode is operated from A.C. or D.C. will affect the value of bias voltage), and the plate and screen current for the given plate voltage.

In the case of resistance-coupled amplifiers which employ high resistance in the plate circuit, it must be remembered that the plate voltage is equal to the plate supply voltage minus the voltage drop in the plate load resistance caused by the plate current. The net plate voltage alone determines the correct value of grid bias.

The foregoing methods of calculations apply to self bias only.

Size of Bias Resistors—In addition to having the proper resistance, a resistor should have sufficient size and heat dissipating ability to carry the current. The actual wattage dissipated in a resistor can easily be calculated from the following application of Ohms law:

$$\text{Watts} = \frac{E^2}{R}$$

where

E = voltage across resistors

R = resistance in ohms

When selecting the proper resistor for a given application, the actual wattage given by the formula should be multiplied from two to ten times, depending upon such factors as air circulation, mounting position, and amount of heat which may be developed without injury to other parts. For a given dissipation, the larger the resistor, the lower the operating temperature per unit of area.

Cut-Off Bias—Every serviceman should be familiar with the formula for calculating "cut-off." This is the point where plate current ceases to flow as the grid voltage is made increasingly negative. In volume control circuits, the control range should never be extended into the "cut-off" region, otherwise serious distortion will result. The formula **for triodes** is

$$\text{"Cut-off" voltage} = \frac{\text{Plate voltage}}{\text{Mu}}$$

The "cut-off" voltage for tetrodes, pentodes and variable mu tubes cannot be calculated from this simple formula, and should be obtained from the tube manufacturers' tables.

Mutual Conductance

The term "Mutual Conductance" has been retained in this compilation since it is in general usage by servicemen and engineers. Actually, this term is a misnomer; and for the purpose of more exact definition it has been superseded in rigorous engineering terminology by the term "Grid-Plate Transconductance." Numerically, the figures expressing "Mutual Conductance" and "Grid-Plate Transconductance" are identical.

These figures are of value to the serviceman in comparing the relative merits of tubes. When used in this manner, comparison should be made only with tubes designed for the same service; because, for example, a comparison of the mutual conductance of an output tube with a pentagrid converter would have no practical value. However, generally, the value of mutual conductance has been accepted as the best single figure of merit for vacuum tube performance.

Mutual Conductance (GM) is an expression which combines in one term amplification factor and plate resistance and is the ratio of the first to the second. Mutual conductance may be more strictly defined as the ratio of a small change in plate current (amperes) to the small change in the control grid voltage which produces it, under conditions that all other voltages remain constant. If a grid potential change of 1 volt causes a plate current change of 1 ma. with all other voltages constant, the mutual conductance is .001 divided by 1 or 0.001 mho. A "mho" is the unit of conductance and was created by spelling ohm backwards. For convenience a millionth of a mho, or a micromho, is used to express mutual conductance. In our example, 0.001 mho × 1,000,000 = micromhos.

The main reason for dropping the expression "mutual conductance" in precise definition is the fact that the term "mutual" implies a reciprocal effect. This is not the case in a vacuum tube, because a plate voltage change will not cause a grid current change of the same ratio.

For the precise definition of the term "Grid-Plate Transconductance" refer to the Table of Definitions, 1E56.

Definition of Terms

Through the special courtesy of the Institute of Radio Engineers, the following glossary is reproduced from the "Standards of Electronics." These definitions are accepted as standard by the Radio Industry.

1E1. Vacuum Tube. A vacuum tube is a device consisting of an evacuated enclosure containing a number of electrodes between two or more of which conduction of electricity through the vacuum or contained gas may take place.

1E2. High-Vacuum Tube. A high-vacuum tube is a vacuum tube evacuated to such a degree that its electrical characteristics are essentially unaffected by gaseous ionization.

1E3. Gas Tube. A gas tube is a vacuum tube in which the pressure of the contained gas or vapor is such as to affect substantially the electrical characteristics of the tube.

1E4. Mercury-Vapor Tube. A mercury-vapor tube is a gas tube in which the active contained gas is mercury vapor.

1E5. Thermionic Tube. A thermionic tube is a vacuum tube in which one of the electrodes is heated for the purpose of causing electron or ion emission from that electrode.

1E6. Phototube. A phototube is a vacuum tube in which one of the electrodes is irradiated for the purpose of causing electron emission.

1E7. Cathode-Ray Oscillograph Tube. A cathode-ray oscillograph tube is a vacuum tube in which the deflection of an electron beam, effected by applied electric and/or magnetic fields, indicates the instantaneous values of the actuating voltages and/or currents.

1E8. Diode. A diode is a two-electrode vacuum tube containing an anode and a cathode.

1E9. Triode. A triode is a three-electrode vacuum tube containing an anode, a cathode, and a control electrode.

1E10. Tetrode. A tetrode is a four-electrode vacuum tube containing an anode, a cathode, a control electrode, and one additional electrode ordinarily in the nature of a grid.

1E11. Pentode. A pentode is a five-electrode vacuum tube containing an anode, a cathode, a control electrode, and two additional electrodes ordinarily in the nature of grids.

1E12. Hexode. A hexode is a six-electrode vacuum tube containing an anode, a cathode, a control electrode, and three additional electrodes ordinarily in the nature of grids.

1E13. Heptode. A heptode is a seven-electrode vacuum tube containing an anode, a cathode, a control electrode, and four additional electrodes ordinarily in the nature of grids.

1E14. Octode. An octode is an eight-electrode vacuum tube containing an anode, a cathode, a control electrode, and five additional electrodes ordinarily in the nature of grids.

1E15. Multielectrode Tube. A multielectrode tube is a vacuum tube containing more than three electrodes associated with a single electron stream.

1E16. Multiple-Unit Tube. A multiple-unit tube is a vacuum tube containing within one envelope two or more groups of electrodes associated with independent electron streams.

Note—A multiple-unit tube may be so indicated; for example, duodiode, duotriode, diode-pentode, duodiode-triode, duodiode-pentode, and triode-pentode.

1E17. Cathode. A cathode is an electrode which is the primary source of an electron stream.

1E18. Filament. A filament is a cathode of a thermionic tube, usually in the form of a wire or ribbon, to which heat may be supplied by passing current through it.

1E19. Indirectly Heated Cathode. (Equipotential Cathode, Unipotential Cathode.) An indirectly heated cathode is a cathode of a thermionic tube to which heat is supplied by an independent heater element.

1E20. Heater. A heater is an electric heating element for supplying heat to an indirectly heated cathode.

1E21. Control Electrode. A control electrode is an electrode on which a voltage is impressed to vary the current flowing between two or more other electrodes.

1E22. Grid. A grid is an electrode having one or more openings for the passage of electrons or ions.

1E23. Space-Charge Grid. A space-charge grid is a grid which is placed adjacent to the cathode and positively biased so as to reduce the limiting effect of space charge on the current through the tube.

1E24. Control Grid. A control grid is a grid, ordinarily placed between the cathode and an anode, for use as a control electrode.

1E25. Screen Grid. A screen grid is a grid placed between a control grid and an anode, and usually maintained at a fixed positive potential, for the purpose of reducing the electrostatic influence of the anode in the space between the screen grid and the cathode.

1E26. Suppressor Grid. A suppressor grid is a grid which is interposed between two electrodes (usually the screen grid and plate), both positive with respect to the cathode, in order to prevent the passing of secondary electrons from one to the other.

1E27. Anode. An anode is an electrode to which a principal electron stream flows.

1E28. Plate. Plate is a common name for the principal anode in a vacuum tube.

1E29. Electron Emission. Electron emission is the liberation of electrons from an electrode into the surrounding space. Quantitatively, it is the rate at which electrons are emitted from an electrode.

1E30. Thermionic Emission. Thermionic emission is electron or ion emission due directly to the temperature of the emitter.

1E31. Secondary Emission. Secondary emission is electron emission due directly to impact by electrons or ions.

1E32. Grid Emission. Grid emission is electron or ion emission from a grid.

1E33. Emission Characteristic. An emission characteristic is a relation, usually shown by a graph between the emission and a factor controlling the emission (as temperature, voltage, or current of the filament or heater).

1E34. Cathode Current. Cathode current is the total current passing to or from the cathode through the vacuous space.

1E35. Filament Current. Filament current is the current supplied to a filament to heat it.

1E36. Filament Voltage. Filament voltage is the voltage between the terminals of a filament.

1E37. Heater Current. Heater current is the current flowing through a heater.

1E38. Heater Voltage. Heater voltage is the voltage between the terminals of a heater.

1E39. Electrode Current. Electrode current is the current passing to or from an electrode through the vacuous space.

Note—The terms grid current, anode current plate current, etc., are used to designate currents passing to or from these specific electrodes.

1E40. Electrode Voltage. Electrode voltage is the voltage between an electrode and a specified point of the cathode.

Note—The terms grid voltage, anode voltage, plate voltage, etc., are used to designate the voltage between these specific electrodes and the cathode.

1E41. Direct Grid Bias. Direct grid bias is the direct component of grid voltage.

Note—This is commonly called grid bias.

1E42. Grid Driving Power. Grid driving power is the average product of the instantaneous value of the grid current and of the alternating component of the grid voltage over a complete cycle.

Note—This comprises the power supplied to the biasing device and to the grid.

1E43. Peak Forward Anode Voltage. Peak forward anode voltage is the maximum instantaneous anode voltage in the direction in which the tube is designed to pass current.

1E44. Peak Inverse Anode Voltage. Peak inverse anode voltage is the maximum instantaneous anode voltage in the direction opposite to that in which the tube is designed to pass current.

1E45. Tube Voltage Drop. Tube voltage drop in a gas or vapor-filled tube is the anode voltage during the conducting period.

1E46. Electrode Dissipation. Electrode dissipation is the power dissipated in the form of heat by an electrode as a result of electron and/or ion bombardment.

1E47. Ionization Current. Ionization current is the electric current resulting from the movement of electric charges in an ionizing medium under the influence of an applied electric field.

1E48. Gas Current. Gas current is a current flowing to an electrode and composed of positive ions which have been produced as a result of gas ionization by an electron current flowing between other electrodes.

1E49. Leakage Current. Leakage current is a conductive current which flows between two or more electrodes by any path other than across the vacuous space.

1E50. Electrode Admittance. Electrode admittance is the quotient of the alternating component of the electrode current by the alternating component of the electrode voltage, all other electrode voltages being maintained constant.

Note—As most precisely used, the term refers to infinitesimal amplitudes.

1E51. Electrode Impedance. Electrode impedance is the reciprocal of the electrode admittance.

1E52. Electrode Conductance. Electrode conductance is the quotient of the in-phase component of the electrode alternating current by the electrode alternating voltage, all other electrode voltages being maintained constant.

Note—This is a variational and not a total conductance. As most precisely used, the term refers to infinitesimal amplitudes.

1E53. Electrode Resistance. Electrode resistance is the reciprocal of the electrode conductance.

Note—This is the effective parallel resistance and is not the real component of the electrode impedance.

1E54. Transadmittance. Transadmittance from one electrode to another is the quotient of the alternating component of the current of the second electrode by the alternating component of the voltage of the first electrode, all other electrode voltages being maintained constant.

Note—As most precisely used, the term refers to infinitesimal amplitudes.

1E55. Transconductance. Transconductance from one electrode to another is the quotient of the in-phase component of the alternating current of the second electrode by the alternating voltage of the first electrode, all other electrode voltages being maintained constant.

Note—As most precisely used, the term refers to infinitesimal amplitudes.

1E56. Control-Grid—Plate Transconductance. Control-grid—plate transconductance is the name for the plate-current-to-control-grid voltage transconductance.

Note—This is ordinarily the most important transconductance and is commonly understood when the term "transconductance" is used.

1E57. Rectification Factor. Rectification factor is the quotient of the change in average current of an electrode by the change in amplitude of the alternating sinusoidal voltage applied to the same electrode, the direct voltages of this and other electrodes being maintained constant.

1E58. Conductance for Rectification. Conductance for rectification is the quotient of the electrode alternating current of low frequency by the in-phase component of the electrode alternating voltage of low frequency, a high-frequency sinusoidal voltage being applied to the same or another electrode and all other electrode voltages being maintained constant.

1E59. Transrectification Factor. Transrectification factor is the quotient of the change in average current of an electrode by the change in the amplitude of the alternating sinusoidal voltage applied to another electrode, the direct voltages of this and other electrodes being maintained constant.

Note—As most precisely used, the term refers to infinitesimal changes.

1E60. Conversion Transconductance. Conversion transconductance is the quotient of the magnitude of a single beat-frequency component (f_1+f_2) or (f_1-f_2) of the output-electrode current by the magnitude of the control-electrode voltage of frequency f_1, under the conditions that all direct electrode voltages and the magnitude of the electrode alternating voltage f_2 remain constant and that no impedances at the frequencies f_1 or f_2 are present in the output circuit.

Note—As most precisely used, the term refers to an infinitesimal magnitude of the voltage of frequency f_1.

1E61. μ Factor. μ factor is the ratio of the change in one electrode voltage to the change in another electrode voltage, under the conditions that a specified current remains unchanged and that all other electrode voltages are maintained constant. It is a measure of the relative effect of the voltages on two electrodes upon the current in the circuit of any specified electrode.

Note—As most precisely used, the term refers to infinitesimal changes.

1E62. Amplification Factor. Amplification factor is the ratio of the change in plate voltage to a change in control-electrod voltage under the conditions that the plate current remains unchanged and that all other electrode voltages are maintained constant. It is a measure of the effectiveness of the control-electrode voltage relative to that of the plate voltage upon the plate current. The sense is usually taken as positive when the voltages are changed in opposite directions.

Note—As most precisely used, the term refers to infinitesimal changes. Amplification factor is a special case of μ-factor.

1E63. Electrode Characteristic. An electrode characteristic is a relation, usually shown by a graph, between an electrode voltage and current, other electrode voltages being maintained constant.

1E64. Transfer Characteristic. A transfer characteristic is a relation, usually shown by a graph, between the voltage of one electrode and the current to another electrode, all other voltages being maintained constant.

1E65. Interelectrode Capacitance. Interelectrode capacitance is the direct capacitance between two electrodes.

1E66. Electrode Capacitance. Electrode capacitance is the capacitance of one electrode to all other electrodes connected together.

1E67. Input Capacitance. The input capacitance of a vacuum tube is the sum of the direct capacitances between the control grid and the cathode and such other electrodes as are operated at the alternating potential of the cathode.

Note—This is not the effective input capacitance, which is a function of the impedances of the associated circuits.

1E68. Output Capacitance. The output capacitance of a vacuum tube is the sum of the direct capacitances between the output electrode (usually the plate) and the cathode and such other electrodes as are operated at the alternating potential of the cathode.

Note—This is not the effective output capacitance, which is a function of the impedances of the associated circuits.

1E69. Class A Amplifier.* A class A amplifier is an amplifier in which the grid bias and alternating grid voltages are such that plate current in a specific tube flows at all times.

1E70. Class AB Amplifier.* A class AB amplifier is an amplifier in which the grid bias and alternating grid voltages are such that plate current in a specific tube flows for appreciably more than half but less than the entire electrical cycle.

1E71. Class B Amplifier.* A class B amplifier is an amplifier in which the grid bias is approximately equal to the cutoff value so that the plate current is approximately zero when no exciting grid voltage is applied and so that plate current in a specific tube flows for approximately one-half of each cycle when an alternating grid voltage is applied.

1E72. Class C Amplifier.* A class C amplifier is an amplifier in which the grid bias is appreciably greater than the cutoff value so that the plate current in each tube is zero when no alternating grid voltage is applied, and so that plate current in a specific tube flows for appreciably less than one half of each cycle when an alternating grid voltage is applied.

*Note—To denote that grid current does not flow during any part of the input cycle, the suffix 1 may be added to the letter or letters of the class identification. The suffix 2 may be used to denote that grid current flows during some part of the cycle

The Characteristics Charts by type numbers, appearing on pages 373 through 401, are arranged in the following manner:

1. The numerically numbered types (01A, 10, 56, 76, etc.) pages 373-377.
2. The R M A standard numbered types (1A5, 2B7, 6A8, 12B8G, etc.) pages 377-391.
3. Rectifier tube types (80, 5Z3, 6W5, etc.) pages 391-393.
4. Special tubes as used by a single manufacturer (Sparton's 485, Majestic's 2Z2, etc.) page 401.

COMPLETE TUBE CHART

Type No.	DESCRIPTION Type	DESCRIPTION Cathode	Basing See Socket Connection Chart on Pages 394-401	Fil. Curr. Amps.	CAPACITANCES Micro-Microfarads Grid Plate	Input	Output	OPERATING CONDITIONS CHARACTERISTICS When Used As	Plate Supply Volts	Screen Grid Volts	Grid Bias Volts (Neg.)	Plate Current Ma.	Screen Current Ma.	Ampl. Factor	Plate Resist. Ohms	Mut. Cond. μMhos.	Max. Undist. Output Watts	Recomm. Load Resist. Ohms	Cut-Off Bias Volts
01A	Triode	Fil. 5.0V	4D Medium 4 Pin	0.25	8.1	3.1	2.2	Grid Leak Det.	45		+A	1.8		8.0	12,000	670			
								Amplifier	90		4.5	2.5		8.0	11,000	725	0.015	25,000	
									135		9.0	3.0		8.0	10,000	800	0.055	20,000	
10	Triode	Fil. 7.5V	4D Medium 4 Pin	1.25	7.0	4.0	3.0	Amplifier	350		32	16		8.0	5,150	1550	0.9	11,000	
									425		40	18		8.0	5,000	1600	1.6	10,200	
WD11	Triode	Fil. 1.1V	4F Special 4 Pin	0.25	3.3	2.5	2.5	Grid Leak Detector	45		+A								
WX12			4D Medium 4 Pin					Amplifier	90		4.5	2.5		6.6	15,500	425	0.007	15,000	
									135		10.5	3.0		6.6	15,000	440	0.040	15,000	
12A	Triode	Fil. 5.0V	4D Medium 4 Pin	0.25	8.5	4.0	2.0	Amplifier	135		9.0	6.2		8.5	5,100	1650	0.130	9,000	
									180		13.5	7.7		8.5	4,700	1800	0.285	10,700	
15	Pentode	Heater 2.0V	5F Small 5 Pin	0.220	0.01	2.35	7.80	Detector-Oscillator	135	67.5	1.5	1.85	0.30	600	800,000	750			
18	Pentode	Heater 14V	6B Small 6 Pin	0.3				Power Amplifier	250	250	16.5	34	7.5	185	79,000	2350	3.0	7,000	
19	Twin Triode	Fil. 2.0V	6C Small 6 Pin	0.260				Complete Class B	135		0	5 (Zero signal plate current per plate)					2.1	10,000	
									135		3.0	2 (Zero signal plate current per plate)					1.9	10,000	
20	Triode	Fil. 3.3V	4D Small 4 Pin	0.132	3.7	2.4	2.3	Power Amplifier	135		22.5	6.0		3.5	5,850	600	0.130	6,500	
22	Screen Grid	Fil. 3.3V	4K Medium 4 Pin	0.132	0.02	4.0	12.0	RF Amplifier	135	67.5	1.5	3.7	1.3	125	250,000	500			
24A	Screen Grid Tetrode	Heater 2.5V	5E Medium 5 Pin	1.75	0.007	5.3	10.5	RF Amplifier	180	90	3.0	4.0	1.7	400	400,000	1000			15
									250	90	3.0	4.0	1.7	630	600,000	1050			15
26	Triode	Fil. 1.5V	4D Medium 4 Pin	1.05	8.1	2.8	2.5	Amplifier	135		10	5.5		8.3	7,600	1100	0.080	8,800	
									180		14.5	6.2		8.3	7,300	1150	0.180	10,500	
27	Triode	Heater 2.5V	5A Small 5 Pin	1.75	3.3	3.1	2.8	Detector	250		30								
								Amplifier	135		9.0	4.7		9	9,000	1000	0.080	13,000	
									180		13.5	5.0		9	9,000	1000	0.165	19,000	
30	Triode	Fil. 2.0V	4D Small 4 Pin	0.060	6.0	3.0	2.1	Amplifier	135		9.0	3.0		9.3	10,300	900	0.070	20,000	
									180		13.5	3.1		9.3	10,300	900	0.130	20,000	
31	Triode	Fil. 2.0V	4D Small 4 Pin	0.130	5.7	3.5	2.7	Amplifier	135		22.5	8.0		3.8	4,100	925	0.185	7,000	
									180		30.0	12.3		3.8	3,600	1050	0.375	5,700	
32	Screen Grid Tetrode	Fil. 2.0V	4K Medium 4 Pin	0.06	0.015	6.0	12.0	Amplifier	135	67.5	3.0	1.7	0.4	610	950,000	640			9.0
									180	67.5	3.0	1.7	0.4	780	1,200,000	650			9.0
33	Pentode	Fil. 2.0V	5K Medium 5 Pin	0.260	1.0	8.0	12.0	Amplifier	135	135	13.5	14.5	3.0	70	50,000	1450	0.700	7,000	
									180	180	18.0	22.0	5.0	90	55,000	1700	1.400	6,000	
34	Variable Mu Pentode	Fil. 2.0V	4M Medium 4 Pin	0.060	0.015	6.0	12.6	1st Detector	67.5 to 180	67.5	5.0								
								Amplifier	135	67.5	3.0	2.8	1.0	360	600,000	600			22.5
									180	67.5	3.0	2.8	1.0	620	1,000,000	620			22.5

Type No.	DESCRIPTION Type	DESCRIPTION Cathode	Basing See Socket Connection Chart on Pages 394-401	Fil. Curr. Amps.	CAPACITANCES Micro-Microfarads Grid Plate	Input	Output	OPERATING CONDITIONS CHARACTERISTICS When Used As	Plate Supply Volts	Screen Grid Volts	Grid Bias Volts (Neg.)	Plate Current Ma.	Screen Current Ma.	Ampl. Factor	Plate Resist. Ohms	Mut. Cond. μMhos.	Max. Undist. Output Watts	Recomm. Load Resist. Ohms	Cut-Off Bias Volts
35/51	Variable Mu Tetrode	Heater 2.5V	5E Medium 5 Pin	1.75	0.007	5.0	10.5	1st Detector	250	90 max.	7.0								
								Amplifier	180	90	3.0	6.3	2.5	305	300,000	1020			40
									250	90 max.	3.0	6.5	2.5	420	400,000	1050			40
36	Screen Grid Tetrode	Heater 6.3V	5E Small 5 Pin	0.30	0.007	3.7	9.2	Detector	180	67.5	6.0								
								Amplifier	100	55	1.5	1.8		470	550,000	850			6.0
									250	90	3.0	3.2	1.7	595	550,000	1080			8.0
37	Triode	Heater 6.3V	5A Small 5 Pin	0.30	2.0	3.5	2.9	Detector	180		20								
								Amplifier	90		6.0	2.5		9.2	11,500	800	0.030	17,500	10
									250		18.0	7.5		9.2	8,400	1100	0.340	20,000	30
38	Pentode	Heater 6.3V	5F Small 5 Pin	0.30	0.30	3.5	7.5	Amplifier	100	100	9.0	7.0	1.2	120	140,000	875	0.270	15,000	
									135	135	13.5	9.0	1.5	120	130,000	925	0.550	13,500	
									250	250	25	22	3.8	120	100,000	1200	2.5	10,000	
39/44	Variable Mu Pentode	Heater 6.3V	5F Small 5 Pin	0.30	.007	4.0	10.0	1st Detector	90 to 250	90	7. approx.								
								Amplifier	90	90	3.0	5.6	1.6	360	375,000	960			42.5
									250	90	3.0	5.8	1.4	1050	1,000,000	1050			42.5
40	Triode	Fil. 5.V	4D Medium 4 Pin	0.25	8.0	2.8	2.2	Detector	180		4.5	0.1		30				250,000	
								Amplifier	180		3.0	0.2		30	150,000	200		250,000	
41	Pentode	Heater 6.3V	6B Small 6 Pin	0.40				Amplifier	180	180	13.5	18.5	3.0	150	81,000	1850	1.5	9,000	
									250	250	18.0	32.0	5.5	150	68,000	2200	3.4	7,600	
42	Pentode	Heater 6.3V	6B Medium 6 Pin	0.70				Amplifier	250	250	16.5	34.0	6.5		80,000	2500	3.2	7,000	
									285	285	20.0	38.0	7.0		78,000	2550	4.8	7,000	
								AB_2 P.P.	375	250	26.0	17.0	2.5				18.5	10,000	(P. to P.)
43	Pentode	Heater 25.0V	6B Medium 6 Pin	0.30				Amplifier	95	95	15.0	20.0	4.0		45,000	2000	0.9	4,500	
									160	120	18.0	33.0	6.5		42,000	2375	2.2	5,000	
45	Triode	Fil. 2.5V	4D Medium 4 Pin	1.50	6.5	3.6	3.0	Amplifier	180		31.5	31.0		3.5	1,650	2125	0.83	2,700	
									275		56.0	36.0		3.5	1,700	2050	2.00	4,600	
								AB_2 P.P.	275		68.0	14 to 69 per	tube				18.00	3,200	(P. to P.)
46	Double Grid Triode	Fil. 2.5V	5C Medium 5 Pin	1.75				Class A	250		33	22.0		5.6	2,380	2350	1.25	6,400	
								Class B	300		0	4 (Zero	signal plate	current per tu	be)		16.00	5,200	(P. to P.)
									400		0	6 (Zero	signal plate	current per tu	be)		20.00	5,800	(P. to P.)
47	Pentode	Fil. 2.5V	5B Medium 5 Pin	1.75	1.2	8.6	13.0	Amplifier	250	250	16.5	31.0	6.0	150	60,000	2500	2.7	7,000	
48	Tetrode	Heater 30V	6A Medium 6 Pin	0.40				Amplifier	95	95	20.0	52.0	12.0	15.6	4,000	3900	2.0	1,500	
									125	100	22.5	56.0	12.0	43	11,000	3900	2.5	1,500	
49	Double Grid Triode	Fil. 2.0V	5C Medium 5 Pin	0.12				Class A	135		20.0	6.0		4.7	4,175	1125	0.170	11,000	
								Class B	180		0	2 (Zero	signal plate c	urrent per tu	be)		3.0	9,000 mi	n.
50	Triode	Fil. 7.5V	4D Medium 4 Pin	1.25	7.1	4.2	3.4	Amplifier	350		63.0	45.0		3.8	1,900	2000	2.4	4,100	
									450		84.0	55.0		3.8	1,800	2100	4.6	4,350	

53	Twin Triode	Heater 2.5V	7B Medium 7 Pin Large Pin Circle	2.0				Class A	294 (Parallel Conn.)		6.0	7.0		35	11,000	3200	0.37	30,000	
								Class B	250		0	14 (Zero signal current per plate)					8.0	8,000	
									300		0	17.5 (Zero signal current per plate)					10.0	10,000	
55	Duplex Diode Triode	Heater 2.5V	6G Small 6 Pin	1.0	1.5 (Triode Section)	1.5	4.3	Diode Detector, Triode Amplifier	180		13.5	6.0		8.3	8,500	975	0.160	20,000	
									250		20.0	8.0		8.3	7,500	1100	0.350	20,000	
56	Triode	Heater 2.5V	5A Small 5 Pin	1.0	3.2	3.2	2.2	Detector	250		20.0	(Plate current—Adjust to 0.2 ma. with no AC input signal)							
								Amplifier	250		13.5	5		13.8	9,500	1450	0.260		
57	Pentode	Heater 2.5V	6F Small 6 Pin	1.0	.007	5.0	6.5	Detector	250	100	4.3							500,000	
								Amplifier	250	100	3.0	2.0	0.5	1500	1,500,000	1225			7
58	Variable Mu Pentode	Heater 2.5V	6F Small 6 Pin	1.0	.007	4.7	6.3	1st Detector	250	100	10.0								
								Amplifier	250	100	3.0	8.2	2.0	1280	800,000	1600			50
59	Triple Grid	Heater 2.5V	7A Medium 7 Pin Large Pin Circle	2.0				Triode	250		28.0	26.0		6	2,300	2600	1.25	5,000	
								Pentode	250	250	18.0	35.0	9.0	100	40,000	2500	3.00	6,000	
								Class B	400		0	13 (Zero signal plate current per tube)					20.0	6,000	(P. to P.)
71A	Triode	Fil. 5.0V	4D Medium 4 Pin	0.25	7.5	3.2	2.9	Amplifier	135		27.0	17.3		3	1,820	1650	0.4	3,000	
									180		40.5	20.0		3	1,750	1700	0.79	4,800	
75	Duplex Diode Triode	Heater 6.3V	6G Small 6 Pin	0.30	1.7 (Triode Section)	1.7	3.8	Diode Detector, Triode Amplifier	250		2.0	0.8		100	91,000	1100			
76	Triode	Heater 6.3V	5A Small 5 Pin	0.30	2.8	3.5	2.5	Amplifier	100		5.0	2.5		13.8	12,000	1150			
									250		13.5	5.0		13.8	9,500	1450			
77	Pentode	Heater 6.3V	6F Small 6 Pin	0.30	.007	4.7	11.0	Detector	250	100	4.3	0.43						500,000	
								Amplifier	250	100	3.0	2.3	0.5	1500	1,500,000	1250			7.5
78	Variable Mu Pentode	Heater 6.3V	6F Small 6 Pin	0.30	.007	4.5	11.0	1st Detector	250	100	10.0	(Suppressor tied to cathode)							
								Amplifier	250	100	3.0	7.0	1.7	1160	800,000	1450			42.5
79	Twin Triode	Heater 6.3V	6H Small 6 Pin	0.60				Complete Class B	250		0	10.5		(Zero signal current, per plate)			8.0	14,000	
85	Duplex Diode Triode	Heater 6.3V	6G Small 6 Pin	0.30	1.5 (Triode Section)	1.5	4.3	Diode Detector, Triode Amplifier	135		10.5	3.7		8.3	11,000	750	.075	25,000	
									180		13.5	6.0		8.3	8,500	975	0.160	20,000	
									250		20.0	8.0		8.3	7,500	1100	0.350	20,000	
89	Triple Grid	Heater 6.3V	6F Small 6 Pin	0.40				Triode	250		31.0	32		4.7	2,600	1800	0.9	5,500	
								Pentode	250	250	25.0	32	5.5	125	70,000	1800	3.4	6,750	
								Class B	180		0	6 (Zero signal current per plate)					3.5	9,400	(P. to P.)
V99	Triode	Fil. 3.3V	4E Small 4 Nub	.063	3.6	2.5	2.2	Amplifier	90 max.		4.5	2.5		6.6	15,500	425	.007		
X99			4D Small 4 Pin																
VR90-30	Voltage Regulator	Cold	4W Octal		(Gas Discharge)			Regulator	Minimum Starting Voltage, 125 Volts. Operating Voltage, 90 Volts. Operating Current 10 Ma. Min., 30 Ma. Max.										
VR105-30	Voltage Regulator	Cold	4W Octal		(Gas Discharge)			Regulator	Minimum Starting Voltage, 137 Volts. Operating Voltage, 105 Volts. Operating Current 5 Ma. Min., 30 Ma. Max.										
VR150-30	Voltage Regulator	Cold	4W Octal		(Gas Discharge)			Regulator	Minimum Starting Voltage, 180 Volts Operating Voltage, 150 Volts Operating Current, 5 Ma. Min., 30 Ma. Max.										
864	Non-Microphonic Triode	Fil. 1.1V	4D Small 4 Pin	0.25	4.0	2.6	2.1	Amplifier	135		9.0	3.5		8.2	12,700	645		15,000	

Type No.	DESCRIPTION Type	DESCRIPTION Cathode	Basing See Socket Connection Chart on Pages 394-401	Fil. Curr. Amps.	CAPACITANCES Micro-Microfarads Grid Plate	Input	Output	When Used As	Plate Supply Volts	Screen Grid Volts	Grid Bias Volts (Neg.)	Plate Current Ma.	Screen Current Ma.	Ampl. Factor	Plate Resist. Ohms	Mut. Cond. μMhos.	Max. Undist. Output Watts	Recomm. Load Resist. Ohms	Cut-Off Bias Volts
874	Voltage Regulator	Cold	Medium 4 Pin Cathode No. 1 Anode No. 3		(Gas D	ischarg	e)	Regulator	Minimum Starting Voltage, 125 Volts Operating Voltage, 90 Volts Operating Current, 10 Ma. Min., 50 Ma. Max.										
884	Gas Triode	Heater 6.3V	6Q Octal	.06				Sweep Circuit Oscillator	300 (ins	t.)		3 Ma.—below 200 cycles 2 Ma.— above 200 cycles							
885	Gas Triode	Heater 2.5V	5A Small 5 Pin	1.4				Grid Controlled Rectifier	350			75 Max.					16 volt max.	drop	
950	Pentode	Fil. 2.0V	5K Small 5 Pin	.012				Power Amplifier	135	135	16.5	7.0	1.8	125	125,000	1000	0.45	13,500	
954	Acorn Pentode	Heater 6.3V	Special	0.150	.007	3.0	3.0	Amplifier	90	90	3.0	1.2	0.5	1100	1,000,000	1100			
									250	100	3.0	2.0	0.7	2000	1,500,000	1400			
								Detector	250	100	6.0							250,000	
955	Acorn Triode	Heater 6.3V	Special	0.150	1.4	1.0	0.6	Class A Amplifier	90		2.5	2.5		25	14,700	1700			
									135		3.75	3.5		25	13,200	1900			
									180		5.0	4.5		25	12,500	2000	.135	20,000	
								Class C Amplifier	180		35	7.0					0.5		
956	Variable Mu Acorn Pentode	Heater 6.3V	Special	0.150	.007	2.7	3.5	Amplifier	250	100	3.0	5.5	1.8	1440	800,000	1800			
1221	Pentode	Heater 6.3V	6F Small 6 Pin	0.3	.010	5	6.5	Detector-Amplifier	Special Non	-microphonic	Tube. Charac	teristics same	as Type 6C6.						
1223	Pentode	Heater 6.3V	7R Octal	0.3				Detector-Amplifier	Special Non	-microphonic	Tube. Charac	teristics same	as Type 6C6	except octal b	ase.				
1231	Pentode	Heater 7.0V†	8V Lock-In	0.48	.015	8.5	6.5	Pentode	300	150	2.5	10.0	2.5	3850	700,000	5500	(Suppressor	to Cathode)	
								Tetrode	300	150	2.5	12.0	0.5	3500	540,000	6500	(Suppressor	to Screen)	
								Triode	250		2.0	13.0		33	5,200	6300	(Suppressor	to Plate)	
1232	Pentode		(See Ty	pe 7G7	/1232														
1602	Triode	Fil. 7.5V	4D Medium 4 Pin Bayonet	1.25	7	4	3	Class A	425		40	18		8.0	5,000	1600	1.6	10,200	
	(For	merly de	signated as 10 S	pecial)				Class B (Two Tubes)	425		50	8 (Zero	signal current	per plate)			25.0	8,000	(P. to P.)
								Class C	450		200	60					13.0		
1603	Non-Micro-phonic Pentode	Heater 6.3V	6F Small 6 Pin	0.30	P .007	entode 5.0	6.5	Amplifier Pentode	250	100	3.0	2		1500	1,500,000	1225			7
					2.0	Triode 3.0	10.5	Triode Connection	250		8.0	6.5		20	10,500	1900			
1612	Heptode	Heater 6.3V	7T Octal	0.30				Mixer, or Amplifier	250	150	6.0	3.3	8.3		1,000,000	350	(G3=Neg. 1	5.0V Approxi	mately)
									250	100	3.0	5.5	5.5		800,000	1100	(G3=Neg.	3.0V Approxi	mately)
1631	Tetrode	Heater 12.6V	7AC Octal	0.45				Other characteris	tics identical	with 6L6									
1632	Tetrode	Heater 12.6V	7AC Octal	0.6				Other characteris	tics identical	with 25L6									
1633	Twin Triode	Heater 25V	8BD Octal	0.15				For applications critical as to the matching of the two triode units. Other ratings, characteristics and dimensions same as 12SN7GT.											
1634	Twin Triode	Heater 12.6V	8S Octal	0.15				For applications critical as to matching of the two triode units. Ratings, characteristics and dimensions identical with 12SC7.											
1851	Pentode	Heater 6.3V	7R Octal	0.45	0.02	11.5	5.2	Amplifier	300	150	160 ohms	10.0	2.5	6750	750,000	9000			

7000	Pentode	Heater 6.3V	7R Octal	0.30	.06	5.6	14	Voltage Amplifier	Special Low Hum, Non-microphonic Tube. Characteristics same as 6C6 and 6J7.									
7700	Pentode	Heater 6.3V	6F Small 6 Pin	.3	.06	5.6	14.		Low hum, low microphonic Characteristics similar to 6C6.					Amplifier for	P.A. service.			
9001	Midget R.F. Pentode	Heater 6.3V	Button Type 7 Pin	0.15	.01	3.6	3.0	RF Amplifier	250	100	3	2.0	0.7		Over 1 meg.	1400		
									90	90	3	1.2	0.5		1 meg.	1100		
								Mixer	250	100	5					550	(Conversion	Transconductance)
									90	90	5							
9002	Midget Triode	Heater 6.3V	Button Type 7 Pin	0.15	1.4			Class A_1 Amplifier	250 (Max.)		7	6.3		25	11,400	2200		
									180		5	4.5		25	12,500	2000		
									90		2.5	2.5		25	14,700	1700		
9003	Midget Variable Mu Pentode	Heater 6.3V	Button Type 7 Pin	0.15	.01	3.4	3.0	R.F. Amplifier	250	100	3	6.7	2.7		.7 meg.	1800		45
								Mixer	250	100	10					600	(Conversion	Transconductance)
									100	100	10							
0A4G	Gas Triode	Cold	4V Octal					Remote Control Tube, Relay Service	130V AC	Starter Anode (Peak) AC 70 volts Max. Starter Anode (Peak) RF 55 volts Min.			Anode Current, 25 Ma. Continuous Max. Anode Current, 100 Ma. Intermittent					
1A4P*	Pentode	Fil. 2.0V	4M Small 4 Pin	0.060	.007	5	11	Amplifier	90	67.5	3.0	2.2	0.9	425	600,000	720		15
									180	67.5	3.0	2.3	0.8	750	1,000,000	725		15
1A4T*	Tetrode	Fil. 2.0V	4K Small 4 Pin	0.060	.010	5	11	Amplifier	135	67.5	3.0	2.2	0.7	220	350,000	625		15
									180	67.5	3.0	2.2	0.7	400	600,000	650		15
1A5-GT/G	Pentode	Fil. 1.4V	6X Octal	0.05				Amplifier	90	90	4.5	4	0.8	255	300,000	850	0.115	25,000
1A6	Pentagrid Converter	Fil. 2.0V	6L Small 6 Pin	0.060	0.8	5.0	6.0	Oscillator Section	180	(Through 20,000 ohm dropping resistor)		2.5						
					0.25	10.5	9.0	Mixer Section	180	67.5	3.0	1.5	2.0		500,000	300	(Conv. Trans.)	22.5
1A7G	Pentagrid Converter	Fil. 1.4V	7Z Octal	0.05	0.9	4.0	4.6	Oscillator Section	90			1.2						
1A7GT					0.3	6.5	11	Mixer Section	90	45	0	0.55	0.60		600,000	250	(Conv. Trans.)	3.0
1B4*	Pentode	Fil. 2.0V	4M Small 4 Pin	0.060	.007	5.0	11.0	Amplifier	135	67.5	3.0	1.6	0.7		1,000,000	560		6.0
951									180	67.5	3.0	1.7	0.6		1,500,000	650		6.0
1B5/25S	Duplex Diode Triode	Fil. 2.0V	6M Small 6 Pin	0.060	3.6 (Triode Section)	1.6	1.9	Amplifier	135		3.0	0.8		20	35,000	575		
1B7G	Pentagrid Converter	Fil. 1.4V	7Z Octal	0.10	.90	4.0	4.2	Oscillator Section	90			1.6						
1B7GT					.34	7.0	7.5	Mixer Section	90	45	0	1.5	1.3		350,000	350	(Conv. Trans.)	14.5
1B8GT	Diode Triode Tetrode	Fil. 1.4V	8AW Octal	0.1				Triode	90		0	1.5		66	240,000	275		
								Tetrode	90	90	6	6.3	1.4			1150	.21	14,000
1C5G	Pentode	Fil. 1.4V	6X Octal	0.10				Amplifier	90	90	7.5	7.5	1.6	180	115,000	1550	0.240	8,000
1C5GT																		
1C6	Pentagrid Converter	Fil. 2.0V	6L Small 6 Pin	0.120	1.5	6.0	6.0	Oscillator Section	180	(Through 20,000 ohm dropping resistor)		3.3						
					0.3	10.0	10.0	Mixer Section	180	67.5	3.0	1.5	2.0		750,000	325	(Conv. Trans.)	14.0
1C7G	Pentagrid Converter	Fil. 2.0V	7Z Octal 8 Pin	0.120					See Data on 1C6									

NOTE: *These tubes were originally introduced as tetrodes, with a suppressor grid type added later. With the sharp cut-off types, such as 1B4 and 1E5G, pentode and tetrode types may be used interchangeably. Variable mu types may, or may not be used interchangeably, depending on the characteristics of the receiver. Note differences in interelectrode capacities and plate resistance.

†Important Note: Lock-In Tubes carry a nominal heater rating of 7.0 volts. Actual recommended heater voltage for household receiver service is 6.3 volts.

Type No.	DESCRIPTION Type	DESCRIPTION Cathode	Basing See Socket Connection Chart on Pages 394-401	Fil. Curr. Amps.	CAPACITANCES Micro-Microfarads Grid Plate	Input	Output	OPERATING CONDITIONS CHARACTERISTICS When Used As	Plate Supply Volts	Screen Grid Volts	Grid Bias Volts (Neg.)	Plate Current Ma.	Screen Current Ma.	Ampl. Factor	Plate Resist. Ohms	Mut. Cond. μMhos.	Max. Undist. Output Watts	Recomm. Load Resist. Ohms	Cut-Off Bias Volts
1D5G$_P$*	Variable Mu Pentode	Fil. 2.0V	5Y Octal 7 Pin	0.060	.007	5.0	11.0	Amplifier	135	67.5	3.0	2.2	0.9	325	1,000,000	625			15.0
									180	67.5	3.0	2.3	0.8	600	1,000,000	725			15.0
1D5G$_T$*	Variable Mu Tetrode	Fil. 2.0V	5R Octal 7 Pin	0.060	0.010	4.4	10.8	Amplifier	135	67.5	3.0	2.2	0.7	220	350,000	625			15.0
									180	67.5	3.0	2.2	0.7	400	600,000	650			15.0
1D7G	Pentagrid Converter	Fil. 2.0V	7Z Octal 8 Pin	0.060	0.2	5.0	6.0	Oscillator Section	See Data on 1A6										
					0.25	11.0	9.0	Mixer Section											
1D8GT	Diode Triode Pentode	Fil. 1.4V	8AJ Octal	0.10				Diode	At negative end of filament.										
								Triode	90		0	1.1		25	43,500	575			
								Pentode	90	90	9	5.0	1.0		200,000	925	0.200	12,000	
1E4G	Triode	Fil. 1.4V	5S Octal	0.05	2.4	2.4	6.0	Amplifier	90		0	4.5		14.5	11,000	1325			
									90		3	1.5		14.0	17,000	825			
1E5GP	Pentode	Fil. 2.0V	5Y Octal 7 Pin	0.060	0.007	5.5	12.0	Amplifier	See Data on 1B4										
1E7G	Double Pentode	Fil. 2.0V	8C Octal 8 Pin	0.240				Push Pull Class AB$_1$	135	135	7.5	Per Section 3.5	1.0				0.575	24,000	(P. to P.)
								Single Section	135	135	4.5	7.5	2.2	350	260,000	1425	0.290		
1F4	Pentode	Fil. 2.0V	5K Medium 5 Pin	0.120	0.8	10.0	8.0	Amplifier	135	135	4.5	8.0	2.4	340	200,000	1700	0.310	16,000	
1F5G	Pentode	Fil. 2.0V	6X Octal 7 Pin																
1F6	Duplex Diode Pentode	Fil. 2.0V	6W Small 6 Pin	0.060	0.007 (Pentode Section)	4.0	9.0	RF or IF Amplifier	180	67.5	1.5	2.2	0.7	650	1,000,000	650			12.0
1F7G	Duplex Diode Pentode	Fil. 2.0V	7AD Octal 8 Pin	0.060	.01 (Pentode Section)	3.8	9.5	AF Resistance Coupled Amplifier	135	135† †Through 1 Megohm dropping resistor		1.0	0.42	48 (Voltage Amplification)				250,000	
1G4-GT/G	Triode	Fil. 1.4V	5S Octal	0.05				Amplifier	90		6	2.3		8.8		825			
1G5G	Pentode	Fil. 2.0V	6X Octal 7 Pin	0.120				Amplifier	90	90	6.0	8.5	2.5	200	133,000	1500	0.250	8,500	
									124	124	11.0	10.0	3.0	220	145,000	1500	0.600	8,000	
									135	135	13.5	8.7	2.5	250	160,000	1550	0.550	9,000	
1G6G 1G6GT	Twin Triode	Fil. 1.4V	7AB Octal	0.10				Complete Class B	90		0	1 (Zero signal per triode) 20 (Peak signal per triode)				675	0.675	12,000	(P. to P.)
1H4G	Triode	Fil. 2.0V	5S Octal 7 Pin	0.06	6.0	3.0	2.1	Amplifier	90		4.5	2.5		9.3	11,000	850			
									135		9.0	3.0		9.3	10,300	900			
									180		13.5	3.1		9.3	10,300	900			
1H5G 1H5GT	Diode Triode	Fil. 1.4V	5Z Octal	0.05	1.1			Amplifier	90		0	0.15		65	240,000	275			
1H6G	Duplex Diode Triode	Fil. 2.0V	7AA Octal 8 Pin	0.06	3.6 (Triode Section)	1.6	1.9	Amplifier	135		3.0	0.8		20	35,000	575			

NOTE: *These tubes were originally introduced as tetrodes, with a suppressor grid type added later. With the sharp cut-off types, such as 1B4 and 1E5G, pentode and tetrode types may be used interchangeably. Variable mu types may, or may not be used interchangeably, depending on the characteristics of the receiver. Note differences in interelectrode capacities and plate resistance.

1J5G	Pentode	Fil. 2.0V	6X Octal 7 Pin	0.120				Amplifier	135	135 Electrical ch	16.5 aracteristics i	7.0 dentical to T	2.0 ype 950	125	125,000	950	0.450	13,500		
1J6G	Twin Triode	Fil. 2.0V	7AB Octal 8 Pin	0.240				Class B	135		0	5 (Zero	signal curren	t, per plate)			2.100			
									135		3	2 (Zero	signal curren	t, per plate)			1.900			
									135		6.0	0.5 (Ze	ro signal curr	ent, per plate	)		1.600			
1LA4	Power Amplifier Pentode	Fil. 1.4V	5AD Lock-In	.05				Power Amplifier	90	90	4.5	4.0	0.8-1.1		300,000	850	.115	25,000		
1LA6	Pentagrid Converter	Fil. 1.4V	7AK Lock-In	.05	0.6	2.8	3.2	Oscillator	90			1.2								
					0.4	7.5	8.0	Mixer	90	45	0	0.55	0.60		750,000	250	(Conversion	Transconduct	ance)	3
1LB4	Power Amplifier Pentode	Fil. 1.4V	5AD Lock-In	.05				Power Amplifier	90	90	9	5.0	1.0		200,000	925	.200	12,000		
									67.5	67.5	6	3.8	0.8		200,000	875	.100	16,000		
									45	45	4.5	1.6	0.3		300,000	650	.035	20,000		
1LC5	R.F. Pentode	Fil. 1.4V	7AO Lock-In	.05	.007	3.2	7.0	Amplifier	90	45	0	1.15	.20		1.5 meg.	775				
									45	45	0	1.1	.25		.7 meg.	750				
1LC6	Pentagrid Converter	Fil. 1.4V	7AK Lock-In	.05	0.6	2.4	4.8	Oscillator	45			1.4								
					.28	9.0	5.5	Mixer	90	35	0	0.75	0.70		650,000	275	(Conversion	Transconduct	ance)	3
									45	35	0	0.7	0.75		300,000	250	(Conversion	Transconduct	ance)	3
1LD5	Diode Pentode	Fil. 1.4V	6AX Lock-In	.05	0.18	3.2	6.0	Voltage Amplifier	90 Max.	45 Max.	0	0.6	0.1		750,000	575				
									45	45	0	0.55	0.12		900,000	550				
1LE3	Triode	Fil. 1.4V	4AA Lock-In	.05	1.7	1.7	3.0	Amplifier	90		0	4.5		14.5	11,200	1300				
									90		3	1.4		14.5	19,000	760				
1LH4	Diode Triode	Fil. 1.4V	5AG Lock-In					Amplifier	90		0	0.15		65	240,000	275				
1LN5	R.F. Pentode	Fil. 1.4V	7AO Lock-In	.05	.007	3.4	8.0	R.F. Amplifier	90	90	0	1.6	0.35		1.1 meg.	800				4.5
1N5G / **1N5GT**	Pentode	Fil. 1.4V	5Y Octal	0.05	.007	2.2	9.0	Amplifier	90	90	0	1.2	0.3	1160	1,500,000	750				4.0
1N6G	Diode Pentode	Fil. 1.4V	7AM Octal	0.05				Diode Detector, Amplifier	90	90	4.5	3.1	0.6		300,000	800	0.100	25,000		
1P5G / **1P5GT**	Pentode	Fil. 1.4V	5Y Octal	0.05	.007	2.2	9.0	Amplifier	90	90	0	2.3	0.7	640	800,000	800				12
1Q5-GT/G	Tetrode	Fil. 1.4V	6AF Octal	0.10				Amplifier	90	90	4.5	9.5	1.6			2100	0.270	8,000		
1R5	Pentagrid Converter	Fil. 1.4V	7AT 7 Pin Button Base	.05		3.8			67.5 Max.			3.0 (Grids 2+	4)							
								Oscillator	67.5			3.2 (Grids 2+	4)							
									45			1.8 (Grids 2+	4)							
									45			1.9 (Grids 2+	4)							
								Mixer	90 Max.		0	1.7			500,000	300	(Conv. Trans.	)		15
									67.5		0	1.5			450,000	280	(Conv. Trans.	)		15
					0.4	7.0	7.0		90		0	0.8			750,000	250	(Conv. Trans.	)		9
									45		0	0.7			600,000	235	(Conv. Trans.	)		9
1S4	Power Pentode	Fil. 1.4V	7AV 7 Pin Button Base	0.1				Power Amplifier	90	67.5	7	7.4	1.4		100,000	1575	.270	8000		
									67.5	67.5	7	7.2	1.5		100,000	1550	.180	5000		
									45	45	4.5	3.8	0.8		100,000	1250	.065	8000		

Type No.	DESCRIPTION Type	DESCRIPTION Cathode	Basing See Socket Connection Chart on Pages 394-401	Fil. Curr. Amps.	CAPACITANCES Micro-Microfarads Grid Plate	Input	Output	OPERATING CONDITIONS CHARACTERISTICS When Used As	Plate Supply Volts	Screen Grid Volts	Grid Bias Volts (Neg.)	Plate Current Ma.	Screen Current Ma.	Ampl. Factor	Plate Resist. Ohms	Mut. Cond. μMhos.	Max. Undist. Output Watts	Recomm. Load Resist. Ohms	Cut-Off Bias Volts
1S5	Diode Pentode	Fil. 1.4V	6AU 7 Pin Button Base	.05	0.3	2.2	2.4	Voltage Amplifier	90	90	0	Plate load resistor 1. meg. Screen series resistor 3. meg.		Voltage gain 50.					
									45	45	0	Plate load resistor 1. meg. Screen series resistor 3. meg.		Voltage gain 30.					
1T4	R.F. Pentode	Fil. 1.4V	6AR 7 Pin Button Base	.05	.01	3.6	7.5	Amplifier	90	67.5	0	3.7	1.25		500,000	900			18
									90	45	0	2.0	.65		800,000	750			10
									45	45	0	1.9	0.7		350,000	700			10
1T5GT	Beam Tetrode	Fil. 1.4V	6X Octal	0.05				Power Amplifier	90 Max.	90 Max.	6	6.5	1.4			1150	0.170	14,000	
2A3	Triode	Fil. 2.5V	4D Medium 4 Pin	2.5				Class A Single Tube	250		45.0	60.0		4.2	800	5250	3.5	2,500	
2A3H		Heater 2.5V	4Q Medium 4 Pin	2.8				Class AB_1	300		62.0	40.0	(Zero signal,	per tube)			15.0	3,000	(P. to P.)
2A4G	Argon Thyratron	Fil. 2.5V	6Q Octal	2.5				Control Tube	200			100 (Average; 1250 Ma. Peak)							
2A5	Pentode	Heater 2.5V	6B Medium 6 Pin	1.75				Pentode Amplifier	250	250	16.5	34.0	6.5	185	80,000	2500	3.2	7,000	
									285	285	20.0	38.0	7.0		79,000	2550	4.8	7,000	
								Triode	250		20.0	31.0		6.8	2,600	2600	0.85	4,000	
								Triode P.P. Class AB	350		38.0	24.0	(Zero signal,	per tube)			13.0	6,000	(P. to P.)
2A6	Duplex Diode Triode	Heater 2.5V	6G Small 6 Pin	0.8	1.7 (Triode Section)	1.7	3.8	Amplifier	250		2.0	1.0		100	91,000	1100			
									250		1.35	0.4						250,000	
2A7	Pentagrid Converter	Heater 2.5V	7C Small 7 Pin	0.8	1.0	7.0	5.5	Oscillator	250	(Through 20,000 ohm dropping resistor)		4.0							
					0.3	8.5	9.0	Mixer Section	250	100	3.0	3.5	2.2		360,000	520	(Conv. Trans.)		45
2B6	Direct Coupled Twin Triode	Heater 2.5V	Special Medium 7 Pin Large Pin Circle	2.25				Input Section	250		24	4.0		7.2		600		8,000	
								Output Section	250		+2.5	40.0		18.0		3500	4.0	5,000	
2B7	Duplex Diode Pentode	Heater 2.5V	7D Small 7 Pin	0.8	0.007 (Pentode Section)	3.5	9.5	Amplifier	100	100	3.0	5.8	1.7	285	300,000	950			17
								RF	250	125	3.0	9.0	2.3	730	650,000	1125			21
								AF	250	50	4.5	0.65						250,000	
2E5	Tuning Indicator	Heater 2.5V	6R Small 6 Pin	0.8				Tuning Indicator	With Plate, 250V (through 1 Meg.), Target 250V, Ip=¼ ma. Shadow Angle 90° when Eg=0. Shadow Angle 0° when Eg=−8V approx.										
2G5	Tuning Indicator	Heater 2.5V	6R Small 6 Pin	0.8				Tuning Indicator	With Plate, 250V (through 1 Meg.), Target 250V Ip=¼ ma. Shadow Angle, 90° when Eg=0. Shadow Angle 0° when Eg=−22V.										
3A8GT	Diode Triode Pentode	Fil. 2.8 or 1.4V	8AS Octal	.05 or .1	2.2	2.6	4.6	Triode Section	90		0	0.15		65	240,000	275			
					0.15	2.6	10.	Pentode Section	90	90	0	1.2	0.3		600,000	750			
3Q4	Power Pentode	Fil. 2.8 or 1.4V	7BA 7 Pin Button Base	.05 or .1				Parallel Filament	90	90	4.5	9.5	2.1		100,000	2150	.270	10,000	
								Series Filament	90	90	4.5	7.7	1.7		120,000	2000	.240	10,000	
3Q5-GT/G	Tetrode	Fil. 2.8 or 1.4V	7AP Octal	.05 or .1				Parallel Filament	90	90	4.5	9.5	1.6		100,000	2100	.270	8,000	
								Series Filament	90	90	4.5	7.5	1.0		100,000	1800	.250	8,000	
3S4	Power Pentode	Fil. 2.8 or 1.4V	7BA 7 Pin Button Base	.05 or .1				Parallel Filament	67.5	67.5	7	7.2	1.5		100,000	1550	.180	5,000	
								Series Filament	67.5	67.5	7	6	1.2		100,000	1400	.160	5.000	
4A6G	Twin Triode	Fil. 2.0 or 4.0V	8L Octal	.12 or .06				Class A (One Section)	90		1.5	1.1		20	26,600	750			
								Class B	90		1.5	1.1	(Plate current per plate)	—max. signal	—10.8 Ma.		1.0	8,000	

6A3	Triode	Fil. 6.3V	4D Medium 4 Pin	1.0	16.0	7.0	3.5	Amplifier One Tube	250		45.0	60		4.2	800	5250	3.2	2,500	
								Class AB1	325		68.0	40 (per tube)					15.0	3,000	(P. to P.)
6A4 LA	Pentode	Fil. 6.3V	5B Medium 5 Pin	0.30				Amplifier	135	135	9	13	2.8	100	52,600	1900	0.700	9,500	
									180	180	12	22	4.5	100	45,500	2200	1.4	8,000	
6A5G	Triode	Heater 6.3V	6T Octal 8 Pin	1.25	16.0	7	5	Amplifier One Tube	250		45.0	60		4.2	800	5250	3.75	2,500	
								Class AB1	325		68.0	40 (per tube)					15.0	3,000	(P. to P.)
									325	(Self bias 850 Ohms)		40 (per tube)					10.0	5,000	(P. to P.)
6A6	Twin Triode	Heater 6.3V	7B Medium 7 Pin Large Pin Circle	0.80				Class A Parallel Conn.	294		6.0	7.0		35	11,000	3200	0.400		
								Class B	250		0	14 (Zero signal, per plate)					8.0	8,000	(P. to P.)
									300		0	17.5 (Zero signal, per plate)					10.0	10,000	(P. to P.)
6A7	Pentagrid Converter	Heater 6.3V	7C Small 7 Pin	0.30	1.0	7.0	5.5	Oscillator	250	(Through 20,000 ohm dropping resistor)		4.0							
					0.30	8.5	9.0	Mixer Section	250	100	3.0	3.5	2.2		300,000	550	(Conv. Trans.)		45
6A8	Pentagrid Converter	Heater 6.3V	8A Octal 8 Pin	0.3	M0.8	6.5	5.0	Oscillator Section	250	(Through 20,000 ohm dropping resistor)		4.0							
6A8G					G 1.0	7.0	5.5	Mixer Section	250	100	3.0	3.5	2.2		300,000	550	(Conv. Trans.)		45
6A8GT					M.03	12.5	12.5												
					G.03	8.5	9.0												
6AB5/ 6N5	Tuning Indicator	Heater 6.3V	6R Small 6 Pin	0.150				Tuning Indicator	135V through .25 Meg., Ip=.5 Ma. Eg=0, Shadow Angle=90°. Eg= −10V Shadow Angle=0°.										
6AB6G	Direct Coupled Twin Triode	Heater 6.3V	7AU Octal 7 Pin	.50				Dynamic Coupled Amplifier	250 each		0	Input 5 Output 34		72	40,000	1800	3.5	8,000	
6AB7/ 1853	Video Pentode	Heater 6.3V	8N Octal	.45	.015	8	5	Amplifier	300	200	3	12.5	3.2	3,500	700,000	5000			15
6AC5G	Triode	Heater 6.3V	6Q Octal 6 Pin	0.4				Dynamic Coupled	250		+13	32		125	36,700	3400	3.7	7,000	
6AC5GT								Class B	250		0	2.5 (Zero signal current, per tube)					8.0	10,000	(P. to P.)
6AC7/ 1852	Video Pentode	Heater 6.3V	8N Octal	.45	.015	11	5	Amplifier	300	150	160Ω cathode resistor	10	2.5	6,750	750,000	9000			
6AD6G	Tuning Indicator	Heater 6.3V	7AG Octal	0.15				Dual Tuning Indicator	Target Voltage 150 Max. Control Electrode +75 Volts=Shadow Closed. +8 Volts=90° Shadow. −50 Volts=135° Shadow.										
6AD7G	Triode Power Pentode	Heater 6.3V	8AY Octal					Triode	250		25.	4		6	19,000	325			
								Pentode (Pentode section	250 equivalent to	250 6F6)	16.5	34	6.5		80,000	2500	3.2	7,000	
6AE5-GT/G	Triode	Heater 6.3V	6Q Octal	0.30				Amplifier	95		15	7.0		4.2	3500	1200	(Cathode driver for 25AC5G)		
6AE6G	Twin Plate Triode	Heater 6.3V	7AH Octal	0.15				Dual Tuning Indicator Driver	250		1.5			25		1000			35
									250		1.5			33		95			9.5
6AE7GT	Combination Driver Triode (Twin Cathode)	Heater 6.3V	7AX Octal	.50	2.5 (Per Section)	3.0	1.8	Characteristics	250		13.5	5.0		14	9300	1500			
								Typical Driver Operation—Dynamic Coupled to two 6AC5G tubes in push-pull. 250 0 10-19 (Driver) 64-76 (Output)									9.5	10,000	(P. to P).
6AF6G	Tuning Indicator	Heater 6.3V	7AG Octal	0.15				Dual Tuning Indicator Target Voltage 135 Max. Control Electrode, 0 Volts=100° Shadow. +81 Volts= 0° Shadow.											

Type No.	DESCRIPTION Type	DESCRIPTION Cathode	Basing See Socket Connection Chart on Pages 394-401	Fil. Curr. Amps.	CAPACITANCES Micro-Microfarads Grid Plate	Input	Output	OPERATING CONDITIONS CHARACTERISTICS When Used As	Plate Supply Volts	Screen Grid Volts	Grid Bias Volts (Neg.)	Plate Current Ma.	Screen Current Ma.	Ampl. Factor	Plate Resist. Ohms	Mut. Cond. μMhos.	Max. Undist. Output Watts	Recomm. Load Resist. Ohms	Cut-Off Bias Volts
6AG7	Video Power Pentode	Heater 6.3V	8Y Octal	.65	.06	12.5	7.5	Amplifier	300	300	10.5	25.0	6.5		100,000	7700			
									300	125	2.0	28.0	7.0				140V Voltage Output	3500	
6AH7GT	Twin Triode	Heater 6.3V	8BE Octal	.3	2.2	3.2	3.0	Amplifier	180		6.5	7.6		16	8400	1900			16
					3.0	2.9	2.6		100		3.6	3.7		16	10,300	1550			8.5
6AL6G	Beam Tetrode	Heater 6.3V	6AM Octal	.9				Amplifier	250	250	14	72	5		22,500	6000	6.5	2500	
6B4G	Triode	Fil. 6.3V	5S Octal 8 Pin	1.0	16	7	5	Amplifier	Identical to	6A3.									
6B5	Direct Coupled Twin-Triode	Heater 6.3V	6AS Medium 6 Pin	0.80				Dynamic Coupled Amplifier	300 each		0	In-put 8 / Out-put 45		58	24,100	2400	4.0	7,000	
									325 ea.		0	9 / 51					5.2	7,000	
								Push-Pull	325 ea.		0	9 / 51					13.5	10,000	(P. to P.)
6B6G	Duplex Diode Triode	Heater 6.3V	7V Octal 7 Pin	0.3	1.7 (Trio	2.7 de Sec	4.5 tion)	Diode Detector Triode Amplifier	See Data on	75									
6B7	Duplex Diode Pentode	Heater 6.3V	7D Small 7 Pin	0.3	0.007 (Pent	3.5 ode Se	9.5 ction)	RF Ampl.	100	100	3.0	5.8	1.7	285	300,000	950			17
									250	100	3.0	6.0	1.5	800	800,000	1000			17
								AF Ampl.	250	50	4.5	0.65						250,000	
6B8	Duplex Diode Pentode	Heater 6.3V	8E Octal 8 Pin	0.3	0.005	6.0	9.0	RF Ampl.	250	125 Max.	3.0	10.0	2.3	800	600,000	1325			21
6B8G					0.007	3.3	9.5		See characte	ristics of 6B7.									
6C5	Triode	Heater 6.3V	6Q Octal 6 Pin	0.3	1.8	4.0	13.0	Amplifier	250		8.0	8.0		20	10,000	2000			
6C5G					1.9	4.4	10.4												
6C5GT																			
6C6	Pentode	Heater 6.3V	6F Small 6 Pin	0.3	0.007	5.0	6.5	Amplifier	250	100	3.0	2.0	0.5	1500	1,500,000	1225			7
								Triode Amplifier	250		8.0	6.5		20	10,000	1900			
								Detector	250	100	4.3							250,000	
6C8G	Twin Triode	Heater 6.3V	8G Octal 8 Pin	0.3	2.4 Top c	2.5 ap sec	3.9 tion	Class A One Triode	250		4.5	3.2		36	22,500	1600			
					2.5 Base	3.4 pin sec	3.5 tion	Phase Inverter	250		3.0	1.0 (Co	mmon Catho	de Resistor 15	00 ohms)			100,000	
6D6	Variable Mu Pentode	Heater 6.3V	6F Small 6 Pin	0.3	0.007	4.7	6.5	Amplifier	100	100	3.0	8.0	2.2	375	250,000	1500			40
									250	100	3.0	8.2	2.0	1280	800,000	1600			40
6D8G	Pentagrid Converter	Heater 6.3V	8A Octal 8 Pin	0.150	1.1	5.5	4.6	Oscillator	250	(Through 20,000 ohm) (dropping resistor)		4.3							
					0.2	8.0	11.0	Mixer	250	100	3.0	3.5	2.6		400,000	550	(Conv. Trans.)		40
6E5	Tuning Indicator	Heater 6.3V	6R Small 6 Pin	0.3				Tuning Indicator	250V through 1 Meg. Ip=.25 ma. Target current 4.0 ma. Eg=0, Shadow Angle=90°. Eg=8.0V. Shadow Angle=0°.										
6E6	Twin Triode	Heater 6.3V	7B Medium 7 Pin	0.60				Class A Push-Pull	180		20.0	Per Section 11.5		6	Per Section 4,300	1400	0.750	15,000	(P. to P.)
									250		27.5	Per Section 18		6	Per Section 3,500	1700	1.600	14,000	(P. to P.)

6F5	High-Mu Triode	Heater 6.3V	5M Octal 5 Pin	0.30	2.0	6.0	12.0	Amplifier	250		2.0	0.9		100	66,000	1500			
6F5G					2.0	3.5	11.0		250		1.3	.2 to .4						250,000	
6F5GT																			
6F6	Pentode	Heater 6.3V	7S Octal 7 Pin	0.70				Single Pentode	250	250	16.5	34	6.5		80,000	2500	3.2	7,000	
									285	285	20	38	7.0		78,000	2550	4.8	7,000	
								Single Triode	285		20	31		6.8	2,600	2600	0.85	4,000	
6F6G								AB Triode	350		38	24	(Zero signal current, per tube)				13.0	6,000	(P. to P.)
6F6GT								AB Pentode	375	250	26	17	(Zero signal current, per tube)				19.0	10,000	(P. to P.)
								AB Pentode	375	250	300Ω	27	(Zero signal current, per tube)				19.0	10,000	(P. to P.)
6F7	Triode Pentode	Heater 6.3V	7E Small 7 Pin	0.30	2.0	2.5	3.0	Triode	100 Max.		3.0	3.5		8.5	16,200	525			
					.008	3.2	12.5	Pentode	250	100	3.0	6.5	1.5	900	850,000	1100			35
								Converter	250	100	10.0	2.8	0.6		2 000,000	300	(Conv. Trans.)		
6F8G	Twin Triode	Heater 6.3V	8G Octal 8 Pin	0.60	4.0	3.2	3.2	Phase Inverter	250		8.0	9.0		20	7,700	2600			
					3.6	3.0	3.8		Individual sections of this tube are identical with 6J5G.										
6G5	Tuning Indicator	Heater 6.3V	6R Small 6 Pin	0.30				Tuning Indicator	250V. Through 1 Meg. Ip=0.24 ma. Eg=0, Shadow Angle=90°. Eg=22 Shadow Angle=0°.										
6H5																			
6G6G	Pentode	Heater 6.3V	7S Octal 7 Pin	0.15				Amplifier	135	135	6.0	11.5	2.0	360	170,000	2100	0.600	12,000	
									180	180	9.0	15	2.5	400	175,000	2300	1.100	10,000	
6H4GT	Single Diode	Heater 6.3V	5AF Octal	0.15				Diode Detector	100 Max.			4 Max.			1,000 (At .25 Ma.)				
6H6	Twin Diode	Heater 6.3V	7Q Octal 7 Pin	0.30				Diode Detector	100 Max. AC			4.0 Max. per plate							
6H6-GT/G																			
6J5	Triode	Heater 6.3V	6Q Octal 7 Pin	0.30	3.4	3.4	3.6	Amplifier	250		8.0	9.0		20	7,700	2600			
6J5-GT/G					3.4	3.8	3.3												
6J7	Pentode	Heater 6.3V	7R Octal 7 Pin	0.30				Amplifier	100	100	3.0	2.0	0.5	1185	1,000,000	1185			7
					.005	7.0	12.0		250	100	3.0	2.2	0.5	1500	1,500,000	1225			7
6J7G					.007	4.7	11.0	Bias Detector	100	36	2.0	0.1						250,000	
6J7GT									250	50	2.0	0.1						250,000	
									250	100	4.3	0.1						250,000	
6J8G	Triode Heptode	Heater 6.3V	8H Octal 8 Pin	0.30				Triode	250	(Through 20 000 ohms)		5.0							
								Heptode	250	100	3.0	1.3	2.9		4,000,000	290	(Conv. Trans.)		20
6K5G	Triode	Heater 6.3V	5U Octal 7 Pin	0.30	2.0	2.4	3.6	Amplifier	100		1.5	0.35		70	78,000	900	(Rating values, not operating conditions)		
6K5GT									250		3.0	1.1		70	50,000	1400	(Rating values, not operating conditions)		
6K6-GT/G	Pentode	Heater 6.3V	7S Octal 7 Pin	0.40				Amplifier	125	125	10.0	11.0	2.0	150	100,000	1525	0.650	11,000	
									167.5	167.5	12.5	17.0	3.0	150	85,000	1800	1.250	9,500	
									180	180	13.5	18.5	3.0	150	81,000	1850	1.500	9,000	
									250	250	18.5	32.0	5.5	150	68,000	2200	3.400	7,600	
6K7	Pentode	Heater 6.3V	7R Octal 7 Pin	0.30				Amplifier	90	90	3.0	5.4	1.3	400	315,000	1275			38.5
					0.005	7.0	12.0		250	125	3.0	10.5	2.6	990	600,000	1650			52.5
6K7G					.007	5.0	12.0	Converter	250	100	10.0	(Oscillator peak 7.0 volts)							
6K7GT																			

Type No.	DESCRIPTION Type	DESCRIPTION Cathode	Basing See Socket Connection Chart on Pages 394-401	Fil. Curr. Amps.	CAPACITANCES Micro-Microfarads Grid Plate	Input	Output	OPERATING CONDITIONS CHARACTERISTICS When Used As	Plate Supply Volts	Screen Grid Volts	Grid Bias Volts (Neg.)	Plate Current Ma.	Screen Current Ma.	Ampl. Factor	Plate Resist. Ohms	Mut. Cond. μMhos.	Max. Undist. Output Watts	Recomm. Load Resist. Ohms	Cut-Off Bias Volts
6K8	Triode Hexode	Heater 6.3V	8K Octal	0.3	M 1.1	6.0	3.2												
6K8G					G 1.8	6.5	3.4	Triode Oscillator	100			3.8							
6K8GT					M .03	6.6	3.5	Hexode Mixer	250	100	3	2.5	6.0		600,000	350	(Conv. Trans.)		30
					G .08	4.6	3.5												
6L5G	Triode	Heater 6.3V	6Q Octal 7 Pin	0.15	2.7	3.0	5.0	Amplifier	100		3.0	4.0		15	10,000	1500			
									250		9.0	8.0		17	9,000	1900			20
6L6	Tetrode	Heater 6.3V	7AC Octal 7 Pin	0.9				Class A1 One Tube	250	250	14 (Fixed)	72–79	5	135	22,500	6000	6.5	2,500	
6L6G									250	250	13.5 (Self)	75–78	5.4				6.5	2,500	
									300	200	12.5 (Fixed)	48–55	2.5–4.7		35,000	5300	6.5	4,500	
									300	200	11.8 (Self)	51–54	3–4.6				6.5	4,500	
									350	250	18.0	54–66	2.5–7		33,000	5200	10.8	4,000	
								Class A1 Push-Pull	250	250	16 (Fixed)	120–140	10–16				14.5	5,000	(P. to P.)
								Class AB1 Push-Pull	360	270	22.5 (Fixed)	88–132	5–15				26.5	6,600	(P. to P.)
								Class AB2 Push-Pull	360	270	22.5 (Fixed)	88–205	5–16				47.0	3,800	(P. to P.)
6L7	Pentagrid Mixer	Heater 6.3V	7T Octal 7 Pin	0.3	G_1 .001 G_3 .10	G_1 7.5 G_3 10.0	11	Mixer	250	100	G_1 −3.0 G_3−10.0	2.4	6.2		1,000,000	350	(Conv. Trans.)		30
6L7G									250	250	G_1 −6.0 G_3−15.0	2.4	8.3		1,000,000 min.	350	(Conv. Trans.)		45
					G_1 .005 G_3 .25	G_1 5.8 G_3 11.5	10.0	Amplifier	250	100	G_1 −3.0 G_3 −3.0	5.3	5.5		800,000	1100			15 (Both Grids)
6N5	Tuning Indicator	Heater 6.3V	6R Small 6 Pin	0.150				Tuning Indicator	135	Through 0.25 Meg. Ip=.5ma. Eg=0, Shadow Angle=90°. Eg=12, Shadow Angle=0°. Target Current=2.0 Ma.									
6N6	Direct Coupled Twin Triode	Heater 6.3V	7W Octal 7 Pin	0.8				Amplifier	300 ea.		0	9. Input		58	24,000	2400	4.0	7,000	
6N6G									See characteristics of 6B5			42. Output							
6N7	Twin Triode	Heater 6.3V	8B Octal 8 Pin	0.8				Class A Parallel Conn.	294		6.0	7		35	11,000	3200	0.400		
6N7G								Class B	250		0	14 (Zero signal, per plate)					8.0	8,000	(P. to P.)
6N7GT									300		0	17.5 (Zero signal, per plate)					10.0	10,000	(P. to P.)
6P5G	Triode	Heater 6.3V	6Q Octal	0.3	2.8	3.5	2.5	Amplifier	250 (Electrical characteristics identical with Type 76.)		13.5			13.8	9,500	1450			
6P5GT																			
6P7G	Triode Pentode	Heater 6.3V	7U Octal 8 Pin	0.3	2.2	2.5	3.0	See Characteristics of 6F7											
					.008	3.2	12.5												
6Q7	Duplex Diode Triode	Heater 6.3V	7V Octal 7 Pin	0.3	1.5	5.5	5.0	Amplifier (Rating Value Only)	100		1.5	0.35		70	88,000	800		.05 to .1 Meg.	
6Q7G					1.7	2.2	3.2												
6Q7GT									250		3.0	1.1		70	58,000	1200		.1 to .25 Meg.	
6R7	Duplex Diode Triode	Heater 6.3V	7V Octal 7 Pin	0.3	2.1	5.0	4.4	Amplifier	250		9.0	9.5		16	8,500	1900			
6R7G					2.3	2.0	3.1												
6R7GT					2.3	2.5	4.5												

6S6GT	Variable Mu Pentode	Heater 6.3V	5AK Octal	.45	.01	7.	6.4	Amplifier	250	100	2	13	3	1400	350,000	4000			30
6S7	Variable Mu Pentode	Heater 6.3V	7R Octal 7 Pin	0.150	.005	6.5	10.5	Amplifier	100	100	3.0	8.0	2.2	375	250,000	1500			40
6S7G					.008	4.4	8.0		250	100	3.0	8.5	2.0	1100	630,000	1750			40
6SA7	Pentagrid Converter	Heater 6.3V	8R Octal	0.30		7.		Oscillator	100			8	(Grids 2 & 4)			4500			
					.13	9.5	12.0	Mixer Section	250		0	3.4			800,000	450	(Conv. Trans.)		
6SA7-GT/G			8AD					(Characteristics same as 6SA7 except capacitances)											
6SC7	Twin Triode	Heater 6.3V	8S Octal	0.30				Amplifier-Phase-Inverter	250		2	2		70	53,000	1325	(Each Section)		
6SD7GT	Semi Variable Mu Pentode	Heater 6.3V	8N Octal	.3	.0035	9.	7.5	Amplifier	250	125	2	9.5	3		700,000	4250			27
									250	100	2	6.0	1.9		1 meg.	3600			11
									100	100	2	5.7	2.0		250,000	3350			11
6SF5	High-Mu Triode (Single end)	Heater 6.3V	8P Octal 6AB	0.30	2.6	4.2	3.8	Amplifier	250 (Rating values—not operating conditions)		2	0.9		100	66,000	1500			
6SF5GT																			
6SF7	Diode Variable Mu Pentode	Heater 6.3V	7AZ Octal	.3	.004	5.5	6.5	Amplifier	250	100	1	12.4	3.3		700,000	2050			35
									100	100	1	12	3.4		200,000	1975			35
6SG7	Variable Mu Pentode	Heater 6.3V	8BC Octal	.3	.003	8.5	7.	Amplifier	250	150	2.5	9.2	3.4		1 meg.	4000			17
									250	125	1	11.8	4.4		900,000	4700			14
									100	100	1	8.2	3.2		250,000	4100			11.5
6SH7	R.F. Pentode	Heater 6.3V	8BK Octal	0.3	.003	8.5	7.0	Amplifier	250	150	1	10.8	4.1		900,000	4900			5.5
									100	100	1	5.3	2.1		350,000	4000			4.0
6SJ7	Pentode (Single end)	Heater 6.3V	8N Octal	0.30	M .005	6.0	7.0	Amplifier	250	100	3	3.0	0.8	2500	1,500,000	1650			
6SJ7GT					G .005	6.5	10.0												
6SK7	Variable Mu Pentode (Single end)	Heater 6.3V	8N Octal	0.30	M .005	6.0	7.0	Amplifier	250	100	3	9.2	2.4	1600	800,000	2000			35
6SK7-GT/G					G .005	6.5	10.0												
6SL7	Twin Triode	Heater 6.3V	8BD Octal	.3				Class A Amplifier Each Section	250		2	2.3		70	44,000	1600			
6SN7GT	Twin Triode	Heater 6.3V	8BD Octal	.6	4.	3.2	3.4	Class A Amplifier Each Section	250		8	9		20	7,700	2600			
					4.	3.8	2.6		90		0	10		20	6,700	3000			
6SQ7	Duplex Diode Triode (Single end)	Heater 6.3V	8Q Octal	0.30	1.8	4.2	3.4	Diode Detector Triode Amplifier	250 (Rating values—not operating conditions)		2	0.8		100	91,000	1100	(Similar to	Type 75)	
6SQ7-GT/G																			
6SR7	Duplex Diode Triode	Heater 6.3V	8Q Octal	.3	2.	3.4	2.8	Amplifier	250		9	9.5		16	8,500	1900	.3		
6SS7	Variable Mu Pentode	Heater 6.3V	8N Octal	.15	.004	5.5	7.0	Amplifier	250	100	3	9	2		1. meg.	1850			35
									100	100	1	12.2	3.1		120,000	1930			35
6T5	Tuning Indicator	Heater 6.3V	6R Small 6 Pin	0.30				Tuning Indicator	250	Through 1 Meg. Ip=.24 Max. Eg=0, Illumination is Max. Eg=22, Illumination is Min. (Discontinued type—replace with 6U5/6G5)									
6T7G/6Q6G	Duplex Diode Triode	Heater 6.3V	7V Octal 7 Pin	0.150	1.7	1.8	3.7	Amplifier (Rating Values Only)	100		1.5	0.3		65	95,000	680		.05 to .1 Meg.	
									250		3.0	1.2		65	65,000	1000		.1 to .25 Meg.	
6U5/6G5*	Tuning Indicator	Heater 6.3V	6R Small 6 Pin	.3				Tuning Indicator	Through 1. meg., Ip=.24 Ma. Max. Eg=0 Illumination is Max. Eg=22.0V Shadow angle zero degrees. *Note—This combined type may be used to replace types 6U5, 6H5, 6T5 and 6G5.										

Type No.	DESCRIPTION Type	DESCRIPTION Cathode	Basing See Socket Connection Chart on Pages 394-401	Fil. Curr. Amps.	CAPACITANCES Micro-Microfarads Grid Plate	Input	Output	OPERATING CONDITIONS CHARACTERISTICS When Used As	Plate Supply Volts	Screen Grid Volts	Grid Bias Volts (Neg.)	Plate Current Ma.	Screen Current Ma.	Ampl. Factor	Plate Resist. Ohms	Mut. Cond. μMhos.	Max. Undist. Output Watts	Recomm. Load Resist. Ohms	Cut-Off Bias Volts
6U6GT	Tetrode	Heater 6.3V	7AC Octal	.75				Amplifier	200	135	14	55–62	3–13		20,000	6200	5.5	3000	
									135	135	13.5	55–60	5–15		10,000	6200	3.3	2000	
									110	110	10.5	44–47	4–11		10,000	5600	2.0	2000	
6U7G	Variable Mu Pentode	Heater 6.3V	7R Octal 7 Pin	0.30	.007	5.0	9.0		See Characteristics of 6D6.										
6V6	Tetrode	Heater 6.3V	7AC Octal 7 Pin	0.45				Amplifier	250	250	12.5	45–47	4.5–6.5	218	52,000	4100	4.25	5,000	
6V6-GT/G								Class AB_1	250	250	15.0	70–79	5–12		60,000	3750	10	10,000	
6V7G	Duplex Diode Triode	Heater 6.3V	7V Octal 7 Pin	0.3	1.5	1.5	4.3		See Characteristics of 85										
6W7G	Pentode	Heater 6.3V	7R Octal	0.15	.007	5.0	8.0	Bias Detector	250	100	4.3							250,000	
								Amplifier	250	100	3.0	2.0	0.5	1850	1,500,000	1225			7
6Y6G	Tetrode	Heater 6.3V	7AC Octal 7 Pin	1.25				Amplifier	135	135 Max.	13.5	58–60	3.5–11		9,300	7000	3.6	2,000	
6Y7G	Twin Triode	Heater 6.3V	8B Octal 8 Pin	0.60					See Characteristics of 79										
6Z7G	Twin Triode	Heater 6.3V	8B Octal 8 Pin	0.3				Class B	135		0	3 (Zero signal current, per plate)					1.5	15,000	
									135		0	3 (Zero signal current, per plate)					2.5	9,000	
									180		0	4.2 (Zero signal current, per plate)					2.2	20,000	
									180		0	4.2 (Zero signal current, per plate)					4.2	12,000	
7A4	Triode	Heater 7.0V†	5AC Lock-In	0.32	4.0			Amplifier	250		8.0	9.0		20	7,700	2600			
7A5	Tetrode	Heater 7.0V†	6AA Lock-In	.80				Power Amplifier	125	125	9	45	3.3–9.5		16,800	6000	2.2	2700	
									110	110	7	41	3–7.5		13,800	5800	1.5	2500	
7A6	Duplex Diode	Heater 7.0V†	7AJ Lock-In	0.16				Diode Detector AVC Rectifier	150 Max. (Similar to Type 6H6G)			10 Max.							
7A7	Variable Mu Pentode	Heater 7.0V†	8V Lock-In	0.32	.005	6.0	7.0	Amplifier	250	100	3.0	9.2	2.4	1600	800,000	2000			35
7A8	Pentagrid Converter	Heater 7.0V†	8U Lock-In	0.16	0.15	7.5	9.0	Mixer Section	250	100	3.0	3.5	3.2		700,000	550	(Conv. Trans.)		30
					0.50	3.6	4.4	Oscillator Section	250	(Through 20,000 ohms)		3.6							
7B4	High Mu Triode	Heater 7.0V†	5AC Lock-In	.32	1.6	3.6	3.4	Amplifier	250		2	.9		100	66,000	1500			
									100		1	.5		100	85,000	1175			
7B5	Pentode	Heater 7.0V†	6AE Lock-In	0.43				Power Amplifier	100	100	7	9.5	1.6	150	104,000	1450	0.35	12,000	
									180	180	13.5	18.5	3.0	150		1850	1.5	9,000	
									250	250	18.0	32.0	5.5	150	68,000	2300	3.4	7,600	
									315	250	21.0	25–28	4–9		75,000	2100	4.5	9000	
7B6	Duplex Diode Triode	Heater 7.0V†	8W Lock-In	0.32				Diode Detector Triode Amplifier	250 (Similar to Type 75)		2.0	1.0		100	91,000	1100			
7B7	Variable Mu Pentode	Heater 7.0V†	8V Lock-In	0.16	.005	5.0	7.0	Amplifier	250	100	3.0	8.5	1.7	1200	750,000	1700			40
7B8	Pentagrid Converter	Heater 7.0V†	8X Lock-In	0.32	0.2	10.0	9.0	Mixer Section	250	100	3.0	3.5	2.7		360,000	550	(Conv. Trans.)		35
					0.9	5.0	3.4	Oscillator Section	250	(Through 20,000 ohms)		4.0							

7C5	Beam Tetrode	Heater 7.0V†	6AA Lock-In	0.48				Class A1 (One tube)	180	180	8.5	29	3	210	58,000	3700	2.0	5,500	
									250	250	12.5	45	4.5	218	52,000	4100	4.25	5 000	
								Class AB1 (Push Pull)	250	250 (This tube is	15.0 similar to 6V	6) 70–79	5–12				10.0	10,000	(P. to P.)
7C6	Duplex Diode Triode	Heater 7.0V†	8W Lock-In	0.16	1.4			Diode Detector Triode Amplifier	250		1.0	1.3		100	100 000	1000			
7C7	Pentode	Heater 7.0V†	8V Lock-In	0.16	.007	5.5	6.5	Amplifier	100	100	3.0	1.8	0.4		1,200,000	1225			
									250	100 (Similar to	3.0 Type 6W7G)	2.0	0.5		2,000,000	1300			7
7E6	Duplex Diode Triode	Heater 7.0V†	8W Lock-In	0.32	1.5	3.0	3.4	Diode Detector Triode Amplifier	250	(Similar to	9.0 Type 6R7G)	9.5		16	8,500	1900			
7E7	Duplex Diode Pentode	Heater 7.0V†	8AE Lock-In	0.32	.005	4.6	4.6	Amplifier	250	100	3.0	7.5	1.6		700,000	1300			42.5
									100	100	1.0	10	2.7		150,000	1600			36
7F7	Twin Triode	Heater 7.0V†	8AC Lock-In	0.32				Voltage Amplifier	250		2	2.3		70	44,000	1600			
									100		1	0.65		70	62,000	1125			
7G7/ 1232	R.F. Pentode	Heater 7.0V†	8V Lock-In	0.48	.007	9.	7.	Amplifier	250	100	2	6	2		800,000	4500			6
7H7	Semi-Variable Mu Pentode	Heater 7.0V†	8V Lock-In	0.32	.007	8.	7.	Amplifier	250	150	2.5	9.5	3.5		800,000	3800			19
									100	100	1	8.2	3.3		250,000	3800			12
7J7	Triode Hexode	Heater 7.0V†	8AR Lock-In	0.32	.01	5.5	7.5	Mixer	250	100	3	1.3	2.9		1.5 meg.	300	(Conv. Trans.)		20
					1.	8.5	2.0	Oscillator	250 Through 20,000 Ω		50,000 Ω Grid Leak	5.4							
7L7	R.F. Pentode	Heater 7.0V†	8V Lock-In	0.32	.01	8.0	6.5	Amplifier	250	100	1.5	4.5	1.5		1 meg.	3100			5
									100	100	1	5.5	2.4		100,000	3000			5
7N7	Twin Triode	Heater 7.0V†	8AC Lock-In	0.64	3.0	3.4	2.0	Amplifier	250		8	9		20	7,700	2600			
					3.0	2.9	2.4		90		0	10		20	6,700	3000			
7Q7	Pentagrid Converter	Heater 7.0V†	8AL Lock-In	0.32		7.0		Oscillator	100			8.5	(Grids 2 & 4)						
					0.2	9.0	9.0	Mixer	250		0	3.5			1 meg.	550	(Conv. Trans.)		35
7R7	Duplex Diode Pentode	Heater 7.0V†	8AE Lock-In	0.32	.004	5.6	5.3	Amplifier	250	100	1	5.7	2.1		1 meg.	3200			20
									100	100	1	5.5	2.2		350,000	3000			16
7V7	Pentode	Heater 7.0V†	8V Lock-In	0.48	.004	9.5	6.5	Amplifier	300	150	160 Ω (Cathode)	9.6	3.9		300,000	5800			6
12A5	Pentode	Heater 6.3V or 12.6V	7F Small 7 Pin	0.60 or 0.30				Amplifier	100	100	15.0	17	3.0	70	50,000	1700	0.8	4,500	
									180	180	25.0	45	8.0	80	35,000	2300	3.4	3,300	
12A6	Tetrode	Heater 12.6V	7AC Octal	0.15				Amplifier	250	250	12.5	30	3.5		50,000	3000	2.5	7500	
12A7	Rectifier Pentode	Heater 12.6V	7K Small 7 Pin	0.30				Rectifier	125 Max.			30 Max.							
								Amplifier	135	135	13.5	9.0	2.5	100	102,000	975	0.550	13,500	
12A8G	Pentagrid Converter	Heater 12.6V	8A Octal	0.15	M 1.1	6.0	4.6	Oscillator	250	(Through 20	,000 ohms)	4.0							
12A8GT					M .26	9.5	12.0	Mixer Section	250	100	3.0	3.5	2.7		360,000	550	(Conv. Trans.)		45
12AH7-GT	Twin Triode	Heater 12.6V	8BE Octal	0.15	2.2	3.2	3.0	Amplifier	180		6.5	7.6		16	8,400	1900			16
					3.0	2.9	2.6		100		3.6	3.7		16	10,300	1550			8.5

†Important Note: Lock-In Tubes carry a nominal heater rating of 7.0 volts. Actual recommended heater voltage for household receiver service is 6.3 volts.

Type No.	DESCRIPTION Type	DESCRIPTION Cathode	Basing See Socket Connection Chart on Pages 394-401	Fil. Curr. Amps.	CAPACITANCES Micro-Microfarads Grid Plate	Input	Output	OPERATING CONDITIONS CHARACTERISTICS When Used As	Plate Supply Volts	Screen Grid Volts	Grid Bias Volts (Neg.)	Plate Current Ma.	Screen Current Ma.	Ampl. Factor	Plate Resist. Ohms	Mut. Cond. μMhos.	Max. Undist. Output Watts	Recomm. Load Resist. Ohms	Cut-Off Bias Volts
12B8GT	Triode Pentode	Heater 12.6V	8T Octal	0.30	T 2.3			Triode Amplifier	100		1	0.6		110	73,000	1500			2.5
					P .015	5.2	9.6	Pentode	100	100	3	8.0	2.0		170,000	2100			42.5
12C8	Duplex Diode Pentode	Heater 12.6V	8E Octal	0.15	.005	6.0	9.0	Diode Detector Amplifier	250	125	3.0	10	2.3	800	600,000	1325			21
12F5GT	High Mu Triode	Heater 12.6V	5M Octal	0.15	2.3	2.2	2.9	Transformer-Coupled Amp.	250		2.0	0.9		100	66,000	1500			
								Resistance Coupled Amp.	250		1.3	.2 to .4	(Plate resistor	¼ to 1 meg.)					
12H6	Twin Diode	Heater 12.6V	7Q Octal	0.15				Diode Detector	Characteristics same as 6H6.										
12J5GT	Triode	Heater 12.6V	6Q Octal	0.15	3.4	3.8	3.3	Amplifier	250		8.0	9.0		20	7,700	2600			
12J7G	Pentode	Heater 12.6V	7R Octal	0.15	.007	4.7	11.0	Detector	250	100	4.3	0.43						500,000	
12J7GT								Amplifier	250	100	3.0	2.0	0.5	1500	1,500,000	1225			7.0
12K7G	Variable Mu Pentode	Heater 12.6V	7R Octal	0.15	.007	4.5	11.0	Amplifier	90	90	3.0	5.4	1.3	400	315,000	1275			38.5
12K7GT									250	125	3.0	10.5	2.6	990	600,000	1650			52.5
								Mixer	250	100	10.0								
12K8	Triode Hexode	Heater 12.6V	8K Octal	.015	M .03	6.6	3.5	Mixer	250	100	3	2.5	6.0		600,000	350	(Conv. Trans.)		30
					G .08	4.6	4.8												
12K8GT					M 1.1	6.0	3.2	Oscillator	100		0	3.8				3000	(Not oscillating with triode grid = 0 volts Triode plate = 100 volts)		
					G 1.8	6.5	3.4												
12Q7G	Duplex Diode Triode	Heater 12.6V	7V Octal	0.15	1.3	2.7	5.7	Diode Detector Amplifier, Transformer Coupled	250		3.0	1.1		70	58,000	1200			
12Q7GT								Resistance Coupled	250		2.0	0.5						200,000	
12SA7	Pentagrid Converter (Single end)	Heater 12.6V	8R Octal	0.15	.13	7. 9.5	12.	Oscillator	100			8.0 (Grids 2 and 4)							
12SA7-GT/G			8AD					Mixer Section	250	100	0	3.4			800,000	450	(Conv. Trans.)		35.0
12SC7	Twin Triode	Heater 12.6V	8S Octal	0.15				Amplifier Phase-inverter	250		2	2.0		70	53,000	1325	(Each Section)		
12SF5	High Mu Triode	Heater 12.6V	8P Octal 6AB	0.30	2.6	4.2	3.8	Amplifier	250		2	.9		100	66,000	1500			
12SF5GT																			
12SF7	Diode Variable Mu Pentode	Heater 12.6V	7AZ Octal	0.15	.004	5.5	6.5	Amplifier	250	100	1	12.4	3.3		700,000	2050			35
									100	100	1	12	3.4		200,000	1975			35
12SG7	Variable Mu Pentode	Heater 12.6V	8BC Octal	0.15	.003	8.5	7.0	Amplifier	250	150	2.5	9.2	3.4		Over 1 meg.	4000			17.5
									250	125	1	11.8	4.4		900,000	4700			14
									100	100	1	8.2	3.2		250,000	4100			11.5
12SJ7	Pentode (Single end)	Heater 12.6V	8N Octal	0.15	M .005	6.0	7.0	Amplifier	100	100	3.0	2.9	0.9	1100	700,000	1575			
12SJ7GT					G .005	6.5	10.0		250	100	3.0	3.0	0.8	2500	1,500,000	1650			
12SK7	Variable Mu Pentode (Single end)	Heater 12.6V	8N Octal	0.15	M .005	6.0	7.0	Amplifier	100	100	3.0	8.9	2.6	475	250,000	1900			
12SK7-GT/G					G .005	6.5	10.0		250	100	3.0	9.2	2.4	1600	800,000	2000			35

12SL7GT	Twin Triode	Heater 12.6V	8BD Octal	0.15				Amplifier (Each Section)	250		2	2.3		70	44,000	1600			
12SN7-GT	Twin Triode	Heater 12.6V	8BD Octal	0.3	4.	3.2	3.4	Amplifier (Each Section)	250		8	9		20	7,700	2600			
					4.	3.8	2.6		90		0	10		20	6,700	3000			
12SQ7 **12SQ7-GT/G**	Duplex Diode Triode (Single end)	Heater 12.6V	8Q Octal	0.15	1.8			Diode Detector Amplifier	250		2.0			100	91,000	1100			
12SR7	Duplex Diode Triode (Single End)	Heater 12.6V	8Q Octal	0.15	2.	3.4	2.8	Diode Detector Amplifier	250		9	9.5		16	8,500	1900			
14A4	Triode	Heater 14V#	5AC Lock-In	0.16	4.	3.4	3.0	Amplifier	250		8	9		20	7,700	2600			
									90		0	10		20	6,700	3000			
14A5	Beam Tetrode	Heater 14V#	6AA Lock-In	0.16				Amplifier	250	250	12.5	30	3.5		70,000	3000	2.8	7500	
14A7/12B7	Variable Mu Pentode	Heater 14V#	8V Lock-In	0.16	.005	6.	7.	Amplifier	250	100	3	9.2	2.6		800,000	2000			35
									100	100	1	8.9	2.6		250,000	1900			35
14B6	Duplex Diode Triode	Heater 14V#	8W Lock-In	0.16				Diode Detector Amplifier	250		2	0.9		100	91,000	1100			
									100		1	0.4		100	110,000	900			
14B8	Pentagrid Converter	Heater 14V#	8X Lock-In	0.16	0.9	5.	3.4	Oscillator Section	250 (Through 20,000 Ω)			4							
									100			2.0							
					0.2	10.	9.	Mixer Section	250	100	3	3.5	2.7		360,000	550	(Conv. Trans.)		35
									100	50	1.5	1.1	1.3		600,000	360	(Conv. Trans.)		20
14C5	Beam Tetrode	Heater 14V#	6AA Lock-In	0.24				Amplifier Single Ended	315	225	13	34	2.2–6		77,000	3750	5.5	8500	
									250	250	12.5	45	4.5–7		52,000	4100	4.5	5000	
									180	180	8.5	29	3–4		58,000	3700	2.0	5500	
								AB_1 Push-Pull (Both Tubes)	285	285	19	70–92	4–13.5		65,000		14.0	8000	(P. to P.)
									250	250	15	70–79	5–13		60,000		10.0	10,000	(P. to P.)
14C7	R.F. Pentode	Heater 14V#	8V Lock-In	0.16	.007	6.	6.5	Amplifier	250	100	3	2.2	0.7		1 meg.	1575			
									100	100	1	5.7	1.8		325,000	2275			
14E6	Duplex Diode Triode	Heater 14V#	8W Lock-In	0.16				Diode Detector Amplifier	250		9	9.5		16	8,500	1900			
									100		3	3.9		16.5	11,000	1500			
14F7	Twin Triode	Heater 14V#	8AC Lock-In	0.16				Amplifier (Each Section)	250		2	2.3		70	44,000	1600			
									100		1	.65		70	62,000	1125			
14H7	Variable Mu Pentode	Heater 14V#	8V Lock-In	0.16	.007	8.	7.	Amplifier	250	150	2.5	9.5	3.5		800,000	3800			19
									100	100	1	8.2	3.3		250,000	3800			12
14J7	Triode Hexode	Heater 14V#	8AR Lock-In	0.16	.01	5.5	7.5	Mixer	250 (a)	100	3	1.3	2.9		1.5 meg.	300	(Conv. Trans.)		20
									100 (b)	100	3	1.1	3.1		300,000	260	(Conv. Trans.)		20
					1.	8.5	2.0	Oscillator	250 (a) (Through 20,000 Ω)		50,000 Ω	5.4							
									100 (b)		50,000 Ω	3.7							
14N7	Twin Triode	Heater 14V#	8AC Lock-In	0.32	3.0	3.4	2.0	Amplifier	250		8.0	9.0		20	7,700	2600			
					3.0	2.9	2.4		90		0	10.0		20	6,700	3000			
14Q7	Pentagrid Converter	Heater 14V#	8AL Lock-In	0.16		7.		Oscillator	100 Max.			8.5 (Grids 2 & 4)							
					.02	9.0	9.0	Mixer	250	100	0	3.5			1 meg.	550	(Conv. Trans.)		35
									100	100		3.3			500,000	525	(Conv. Trans.)		35

#Important Note: These lock-in tubes carry a nominal heater rating of 14.0 volts. Actual recommended heater voltage for household receiver service is 12.6 volts.

Type No.	DESCRIPTION Type	DESCRIPTION Cathode	Basing See Socket Connection Chart on Pages 394-401	Fil. Curr. Amps.	CAPACITANCES Micro-Microfarads Grid Plate	Input	Output	OPERATING CONDITIONS CHARACTERISTICS When Used As	Plate Supply Volts	Screen Grid Volts	Grid Bias Volts (Neg.)	Plate Current Ma.	Screen Current Ma.	Ampl. Factor	Plate Resist. Ohms	Mut. Cond. μMhos.	Max. Undist. Output Watts	Recomm. Load Resist. Ohms	Cut-Off Bias Volts
14R7	Duplex Diode Pentode	Heater 14V#	8AE Lock-In	0.16	.004	5.6	5.3	Amplifier	250	100	1	5.7	2.1		1 meg.	3200			20
									100	100	1	5.5	2.2		350,000	3000			16
25A6	Pentode	Heater 25.0V	7S Octal 7 Pin	0.30				Amplifier	95	95	15	20	4	90	45,000	2000	0.900	4,500	
25A6G									135	135 Max.	20	37	8	85	35,000	2450	2.000	4,000	
25A6GT									160	120	18	33	6.5		42,000	2375	2.200	5,000	
25A7G	Rectifier Pentode	Heater 25.0V	8F Octal 8 Pin	0.30				Rectifier	125 Max.			75 Max.							
25A7GT								Amplifier	100 Max.	100	15	20.5	4.0	80	50,000	1800	0.770	4,500	
25AC5GT	Power Triode	Heater 25.0V	6Q Octal	0.30				Dynamic-Coupled Amplifier	180			37		58	15,200	3800	2.0	5,000	
									110			45					2.7	2,000	
25B5	Direct Coupled Twin Triode	Heater 25V	6AS Small 6 Pin	0.3				Dynamic Coupled Amplifier	110 (each)		0	Input 7 Output 45		25	11,400	2200	2.0	2,000	
25B6G	Pentode	Heater 25.0V	7S Octal 7 Pin	0.30				Amplifier	105	105	16	48–55	2–10		15,500	4800	2.4	1,700	
25B8GT	Triode Pentode	Heater 25.0V	8T Octal	0.15	2.2 .02	— 5.5	— 10.0	Triode Amp.	100		1.0	0.6		112.5	75,000	1500			2.5
								Pentode Amp.	100	100	3.0	7.6	2.0	370	185,000	2000			41
25C6G	Beam Tetrode	Heater 25.0V	7AC Octal	0.30				Amplifier	135	135	13.5	58	3.5–11		9,300	7000	3.6	2 000	
									200	135	14.0	61–66	2.2– 9		18,300	7100	6.0	2,600	
25L6	Tetrode	Heater 25.0V	7AC Octal 7 Pin	0.30				Amplifier	110	110	7.5	49	4–9		10,000	8200	2.100	1,500	
25L6-GT/G									110	110	7.5	49	4–11		10,000	8200	2.200	2,000	
25N6	Direct Coupled Twin Triode	Heater 25.0V	7W Octal 7 Pin	0.3				Dynamic Coupled Amplifier	110 (each)		0	Input 7 Output 45		25	11,400	2200	2.0	2,000	
32L7GT	Single Diode, Tetrode	Heater 32.5V	8Z Octal	0.30				Rectifier	125			60							
								Amplifier	110	110	7.5	40	3		15,000	6000	1.5	2,500	
35A5	Beam Tetrode	Heater 35.0V	6AA Lock-In	0.16				Power Amp. Note: Nominal heater rating=35 volts, .16 Amp. Actual recommended working voltage=32 volts, .15 Amp.	110	110	7.5	35	2.8		25,000	5500	1.4	2,500	
35L6-GT/G	Beam Tetrode	Heater 35.0V	7AC Octal	0.15				Power Amplifier	110	110	7.5	40	3–7	80		5800	1.5	2,500	
50A5	Tetrode	Heater 50.0V	6AA Lock-In	*0.15				Amplifier	200	110	8	50–55	1.5–6		35,000	8250	4.7	3,000	
									110	110	7.5	49–50	4–11		10,000	8200	2.2	2,000	
50C6G	Tetrode	Heater 50.0V	7AC Octal	0.15				Amplifier	200	135	14	61–66	2.2–9		18,300	7100	6	2,600	
									135	135	13.5	58–60	3.5–11.5		9,300	7000	3.6	2,000	
50L6GT	Beam Tetrode	Heater 50.0V	7AC Octal	0.15				Power Amplifier	110	110	8	45–48	3.5–10.5		10,000	8000	2.2	2,000	
70A7GT	Diode Rectifier Power Tetrode	Heater 70.0V	8AB Octal	0.15				Rectifier	125			60 Max.							
								Power Amplifier	110	110	7.5	40	3	80		5800	1.5	2,500	
70L7GT	Rectifier Beam Tetrode	Heater 70.0V	8AA Octal	0.15				Rectifier	125			70							
								Power Amplifier	110	110	7.5	40–43	3–6		15,000	7500	1.8	2,000	

#Important Note: These lock-in tubes carry a nominal heater rating of 14.0 volts. Actual recommended heater voltage for household receiver service is 12.6 volts.

117L7-GT	Diode Rectifier Power Tetrode	Heater 117.0V	8AO Octal	.09				Rectifier	117			75 Max.							
								Power Amplifier	105	105	5.5	45	4		20,000		0.6	4,000	
117M7-GT	Diode Rectifier Power Tetrode	Heater 117.0V	8AO Octal	.09				Rectifier	117			75 Max.							
								Power Amplifier	100	100	5.5	45	4		15,000	6500	1.0	2,000	
117N7-GT	Diode Rectifier Power Tetrode	Heater 117.0V	8AV Octal	.09				Rectifier	117			75 Max.							
								Power Amplifier	100	100	6	51	5		16,000	7000	1.2	3,000	
17P7-GT	Diode Rectifier Power Tetrode	Heater 117.0V	8AV Octal	.09				Rectifier	117			75 Max.							
								Power Amplifier	105	105	5.2	43	4–5.5		17,000	5300	0.85	4,000	

RECTIFIER TUBES

Type No.	DESCRIPTION			Base Pages 394-401	Fil. Volts	Fil. Amps.	Max. A.C. Volts Per Anode		Max. D.C. Output Current Ma.	Max. Peak Inverse Volts	Max. Peak Plate§ Current Ma.	Input Choke Value (Min.)	Plate Supply Impedance Min. Ohms
	Circuit	Class	Cathode				Condenser Input Filter	Choke Input Filter					
BA	Full Wave	Gas	Cold	4J—Medium 4 Pin	—	—	350		350	1000	1000		
BH	Full Wave	Gas	Cold	4J—Medium 4 Pin	—	—	350		125	1000	400		
BR	Half Wave	Gas	Cold	4H—Medium 4 Pin	—	—	300		50	850	200		
1V	Half Wave	High Vacuum	Heater	4G—Small 4 Pin	6.3	0.3	117		45	1000	200		0
							150		45	1000	200		30
							325		45	1000	200		75
80	Full Wave	High Vacuum	Heater	4C—Medium 4 Pin	5.0	2.0	350	500	125	1400	375	5 hy	10
81	Half Wave	High Vacuum	Heater	4B—Medium 4 Pin	7.5	1.25	700	700	85	2000	300		
82	Full Wave	Mercury Vapor	Filament	4C—Medium 4 Pin	2.5	3.0	450	550	115	1550	500	6 hy	50
83	Full Wave	Mercury Vapor	Filament	4C—Medium 4 Pin	5.0	3.0	450	550	225	1550	1000	3 hy	50
83V	Full Wave	High Vacuum	Heater	4L or 4AD Medium 4 Pin	5.0	2.0	375	500	175	1400	525	4 hy	100
84/6Z4	Full Wave	High Vacuum	Heater	5D—Small 5 Pin	6.3	0.5	325	450	60	1250	180	10 hy	150
0Z3	Full Wave	Gas	Cold	5N—Small 5 Pin	—	—	350	350	75 Max. 30 Min.	1250	200		
0Z4 / **0Z4G**	Full Wave	Gas	Cold	4R—Octal 4 Pin	—	—	300	300	75 Max. 30 Min.	1000 (Peak plate-to-plate)	200		
2X2/879	Half Wave	High Vacuum	Filament	4P—Small 4 Pin	2.5	1.75	4500		7.5	12,500	100		
2W3	Half Wave	High Vacuum	Filament	4X—Octal	2.5	1.5	350		55				
5T4	Full Wave	High Vacuum	Filament	5T—Octal 5 Pin	5.0	2.0	450	550	225	1550	675	3 hy	75
5U4G	Full Wave	High Vacuum	Filament	5T—Octal 5 Pin	5.0	3.0	450	550	225	1550	675	3 hy	75
5V4G	Full Wave	High Vacuum	Heater	5L—Octal 5 Pin	5.0	2.0	375	500	175	1400	525	4 hy	100
5W4 / **5W4GT/G**	Full Wave	High Vacuum	Filament	5T—Octal 5 Pin	5.0	1.5	350	500	100	1400	300	6 hy	25

§Note—Value per plate on double rectifiers.

Type No.	DESCRIPTION			Base Pages 394-401	Fil. Volts	Fil. Amps.	Max. A.C. Volts Per Anode		Max. D.C. Output Current Ma.	Max. Peak Inverse Volts	Max. Peak Plate§ Current Ma.	Input Choke Value (Min.)	Plate Supply Impedance Min. Ohms
	Circuit	Class	Cathode				Condenser Input Filter	Choke Input Filter					
5X4G	Full Wave	High Vacuum	Filament	5Q—Octal 8 Pin	5.0	3.0	450	550	225	1550	675	3 hy	75
5Y3GT/G	Full Wave	High Vacuum	Filament	5T—Octal 5 Pin	5.0	2.0	350	500	125	1400	375	5 hy	10
5Y4G	Full Wave	High Vacuum	Filament	5Q—Octal 8 Pin	5.0	2.0	350	500	125	1400	375	5 hy	10
5Z3	Full Wave	High Vacuum	Filament	4C—Medium 4 Pin	5.0	3.0	450	550	225	1550	675	3 hy	75
5Z4 5Z4GT/G	Full Wave	High Vacuum	Filament	5L—Octal 5 Pin	5.0	2.0	350	500	125	1400	375	5 hy	30
6W5 6W5G	Full Wave	High Vacuum	Heater	6S—Octal 6 Pin	6.3	0.9	325	450	90	1250	270	6 hy	
6X5 6X5GT/G	Full Wave	High Vacuum	Heater	6S—Small Octal 6 Pin	6.3	0.6	325	450	70	1250	210	10 hy	150
6ZY5G	Full Wave	High Vacuum	Heater	6S—Small Octal 6 Pin	6.3	0.3	325	450	40	1250	120	13.5 hy	225
7Y4	Full Wave	High Vacuum	Heater	5AB Lock-In	6.3	0.5	325	450	60	1250	180	10 hy	150
7Z4	Full Wave	High Vacuum	Heater	5AB Lock-In	6.3	0.9	325	450	100	1250	300	6 hy	75
12Z3	Half Wave	High Vacuum	Heater	4G—Small 4 Pin	12.6	0.3	117		55	700	330		0
							150		55	700	330		30
							235		55	700	330		75
14Y4	Full Wave	High Vacuum	Heater	5AB Lock-In	12.6	0.3	325	450	70	1250	210	8 hy	150
25Y5	Rectifier Doubler	High Vacuum	Heater	6E—Small 6 Pin	25.	0.3	235		75 (per plate)	700			0
25Z4	Half Wave	High Vacuum	Heater	5AA Octal	25.	0.3	125		125		750		
25Z5	Rectifier Doubler	High Vacuum	Heater	6E—Small 6 Pin	25.	0.3	235		75 (per plate)	700			100
							150		75 (per plate)	700			40
							117		75 (per plate)	700			15
25Z6 25Z6GT/G	Doubler	High Vacuum	Heater	7Q—Octal 7 Pin	25.	0.3	Characteristics same as 25Z5						
35Y4	Half Wave	High Vacuum	Heater	5AL—Lock-In	32.	0.15	235 (Note—Heater tapped for panel lamp)		100	700	600		100
35Z3	Half Wave	High Vacuum	Heater	4Z—Lock-In	32.	0.15	235		100	700	600		100
							150		100	700	600		40
							117		100	700	600		15
35Z4GT	Half Wave	High Vacuum	Heater	5AA—Octal	35.	0.15	235		100	700	600		15 ohms (117V) 100 ohms (235V)
35Z5GT/G	Half Wave	High Vacuum (Note—Heater tapped for panel lamp)	Heater	6AD—Octal	35.	0.15	235		100 (without pilot) 60 (with pilot) 90 (pilot and shunt)	700	600		15 ohms (117V) 100 ohms (235V)

§Note—Value per plate on double rectifiers.

Type No.	DESCRIPTION			Base Pages 394-401	Fil. Volts	Fil. Amps.	Max. A.C. Volts Per Anode		Max. D.C. Output Current Ma.	Max. Peak Inverse Volts	Max. Peak Plate§ Current Ma.	Input Choke Value (Min.)	Plate Supply Impedance Min. Ohms
	Circuit	Class	Cathode				Condenser Input Filter	Choke Input Filter					
40Z5	Half Wave	High Vacuum	Heater	6AD—Octal	45.	0.15	For other ratings	, see 35Z5					
45Z5GT		(Note—Heater tapped for panel lamp)											
45Z3	Half Wave	High Vacuum	Heater	5AM Button 7 Pin	45.	.075	117		65	350	390		15
50Y6GT/G	Rectifier	High Vacuum	Heater	7Q Octal 7 Pin	50	0.15	235		75 (per plate)	700	450		100
	Doubler						150		75 (per plate)	700	450		40
							117		75 (per plate)	700	450		15
50Z7G	Rectifier	High Vacuum	Heater	8AN Octal	50.	0.15	235		65 (per plate)	700	400		15 ohms (117V) 100 ohms (235V)
	Doubler	(Note—Heater tapped for panel lamp)											
117Z6GT/G	Rectifier	High Vacuum	Heater	7Q—Octal 7 Pin (Originally based 7AR)	117.	.075	235		60 (per plate)	700	360		100
	Doubler						150		60 (per plate)	700	360		60
							117		60 (per plate)	700	360		15

§Note—Value per plate on double rectifiers.

SPECIAL ANNOUNCEMENT

● As this book goes to press, the War Production Board has issued Limitation Order L-76 prohibiting the manufacture of 349 types of tubes.

In general, this order simply marks a continuation of the tube standardization program, in that the discontinued tubes represent the duplicate, small demand, or obsolete types. In fact, estimates on these types show that they represent only 6/10 of 1% of current production, and that present stocks will last for approximately two years.

The Technical Information Section, Wholesale Division, of P. R. Mallory & Company, Inc., will be glad to assist any user in selecting suitable substitute tubes on receipt of information as to the make, model number, and tube complement of the radio receiver.

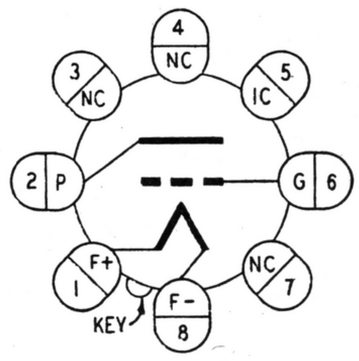

4AA

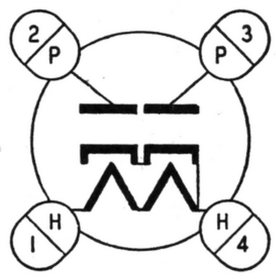

4AD

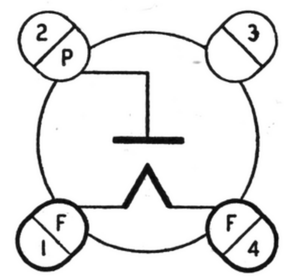

4B

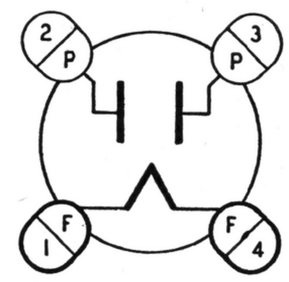

4C

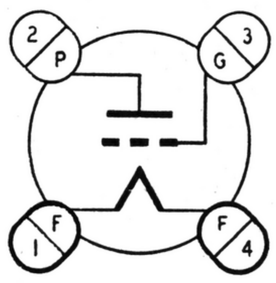

4D

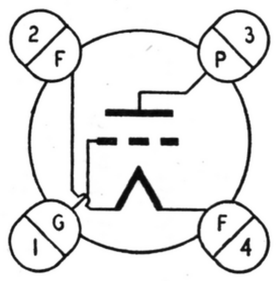

4E

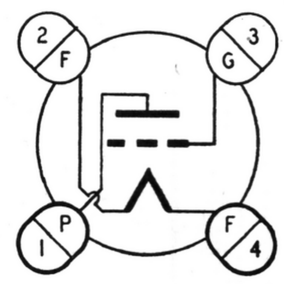

4F

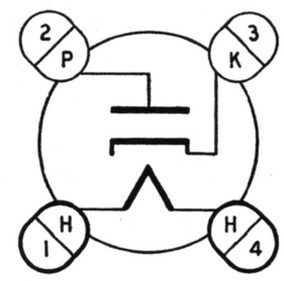

4G

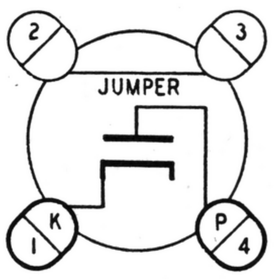

4H

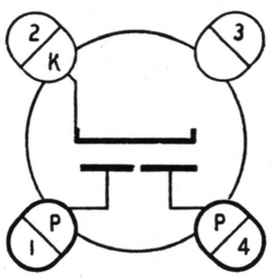

4J

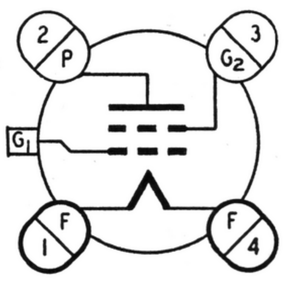

4K

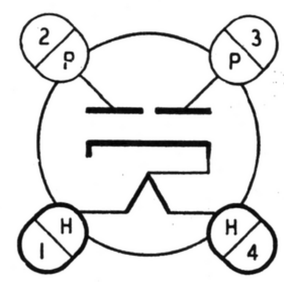

4L

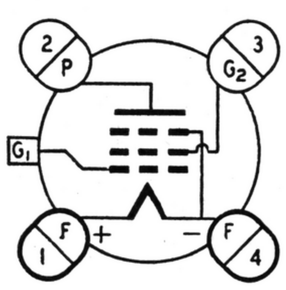

4M

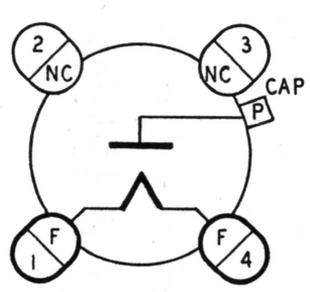

4P

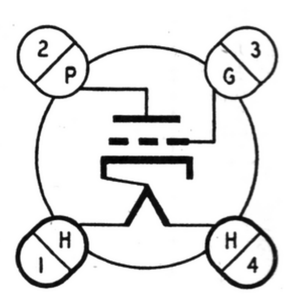

4Q

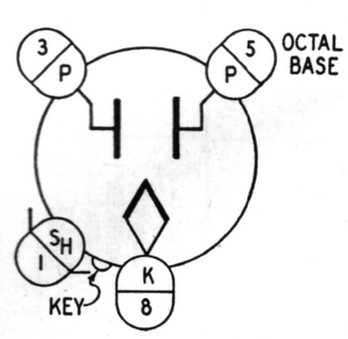

4R

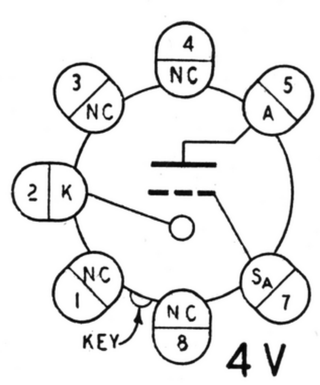

4V

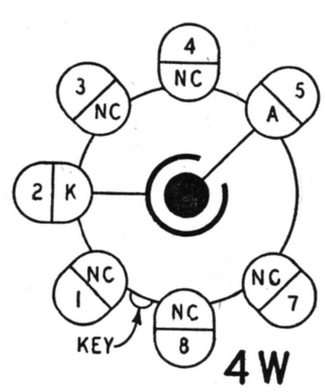

4W

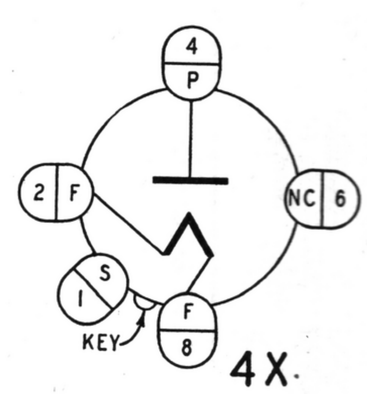

4X

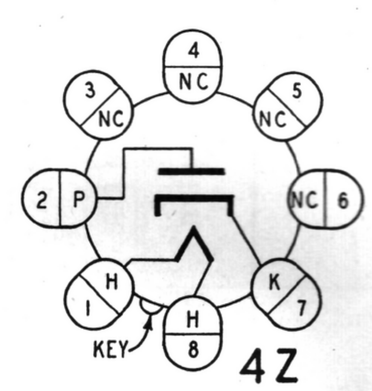

4Z

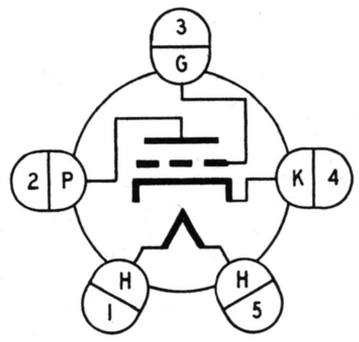

5A

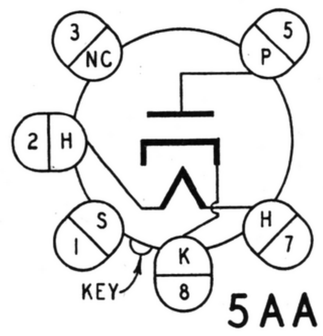

5AA

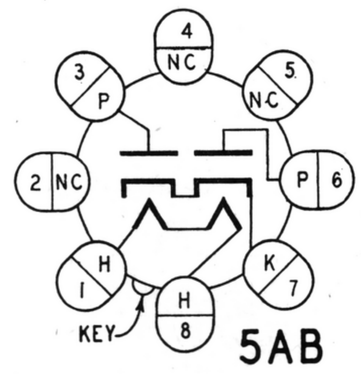

5AB

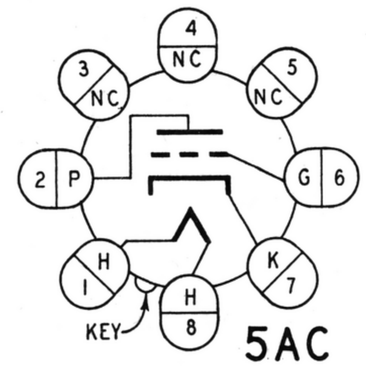

5AC

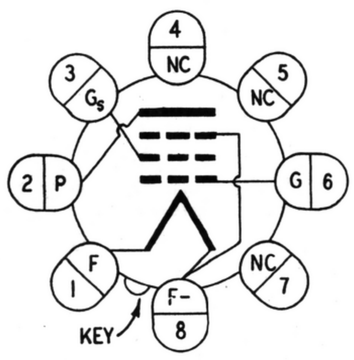

5AD

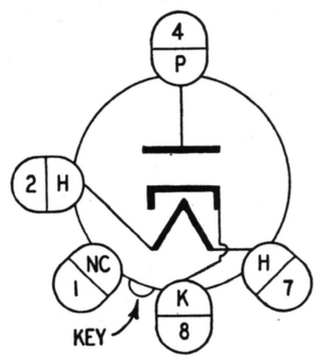

5AF

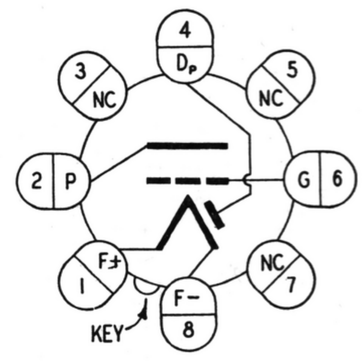

5AG

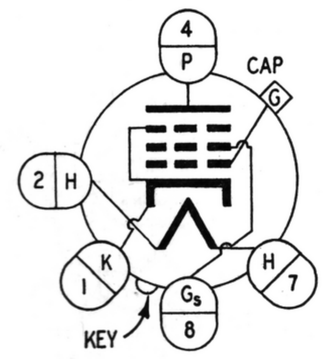

5AK

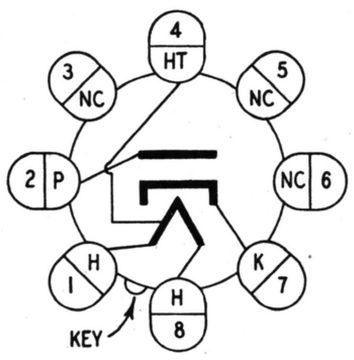

5AL

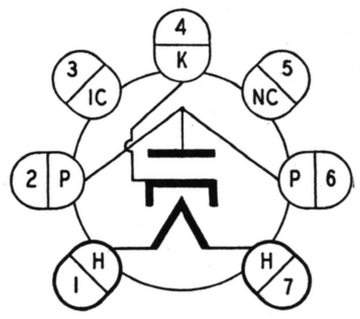

5AM

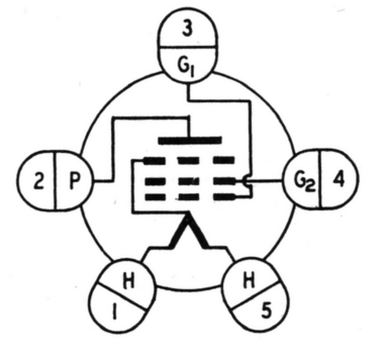

5 B

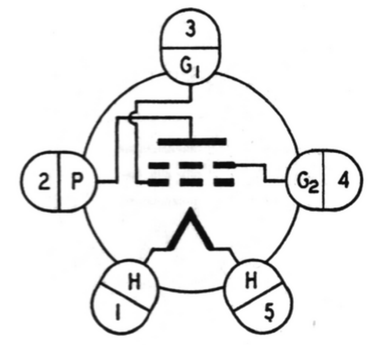

5 C

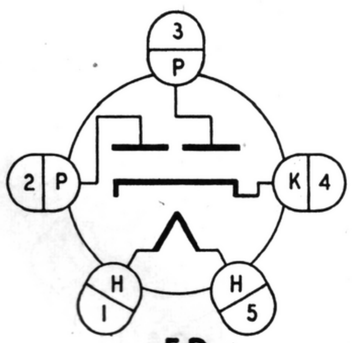

5D

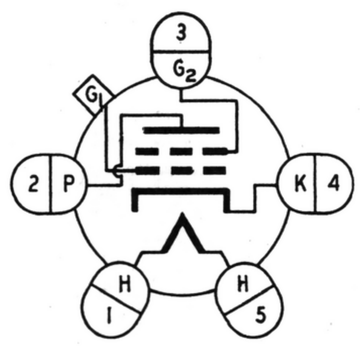

5 E

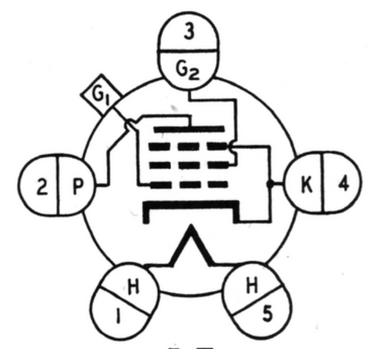

5 F

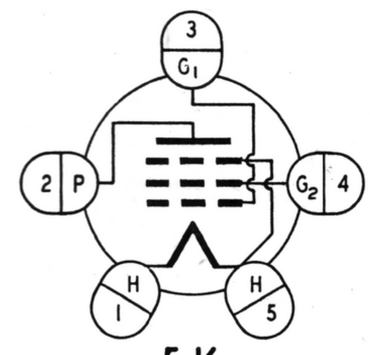

5 K

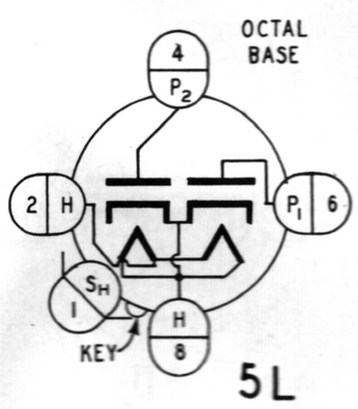

5 L

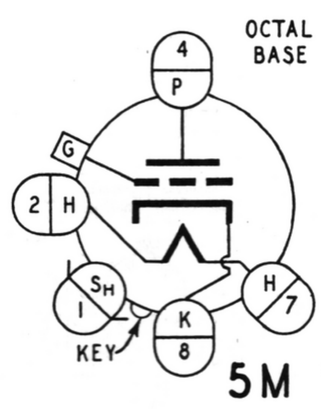

5 M

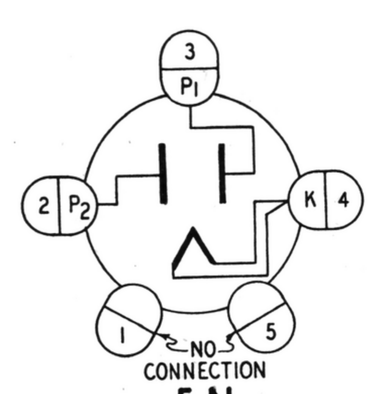

5 N

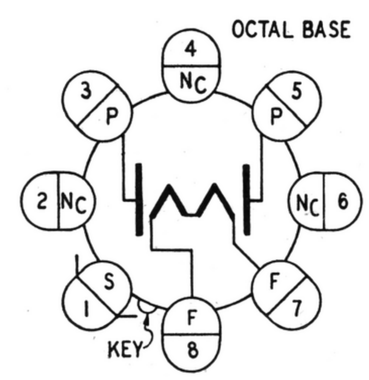

5Q

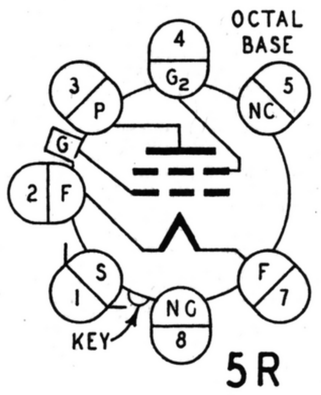

5R

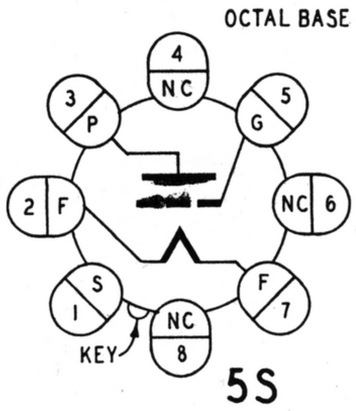

5S

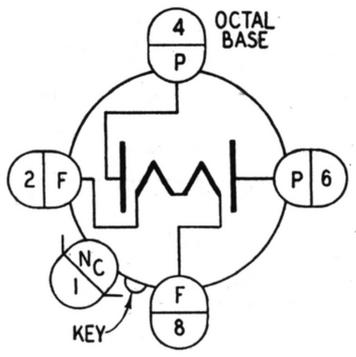

5T

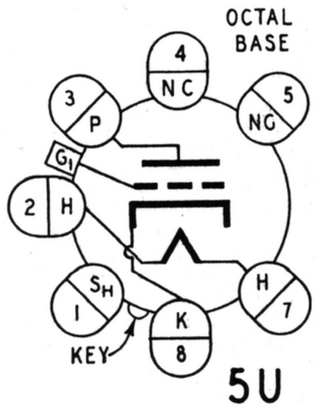

5U

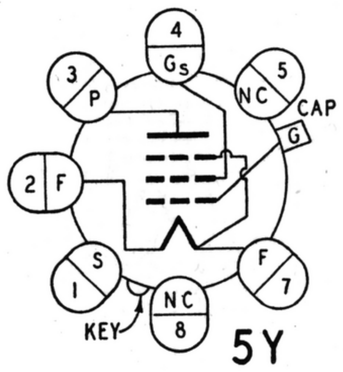

5Y

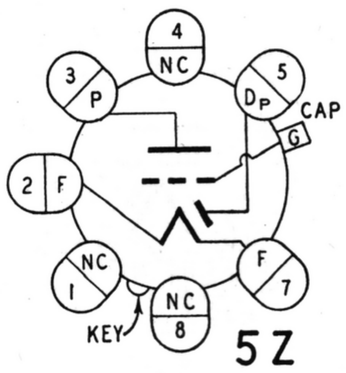

5Z

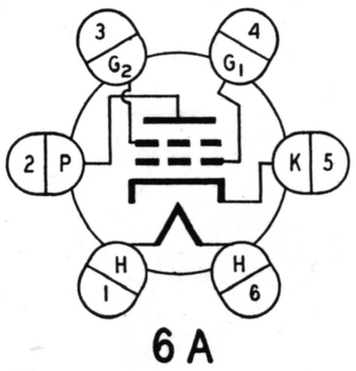

6A

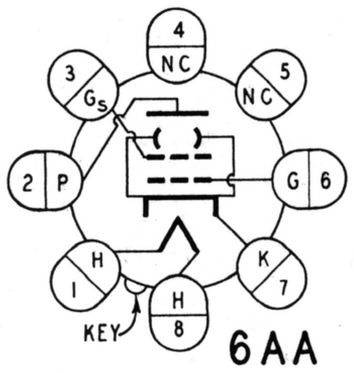

6AA

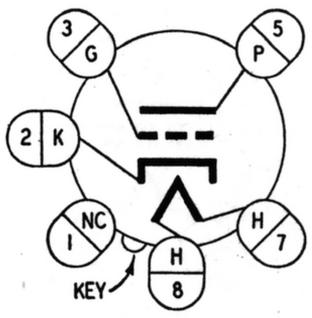

6AB

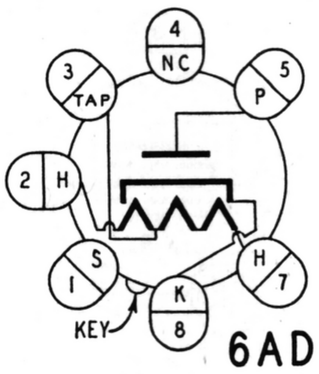

6AD

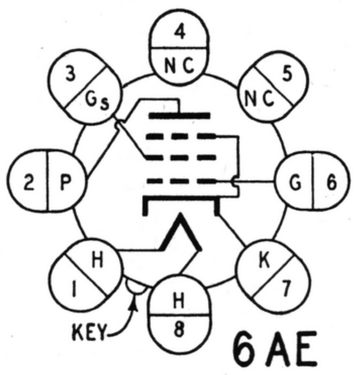

6AE

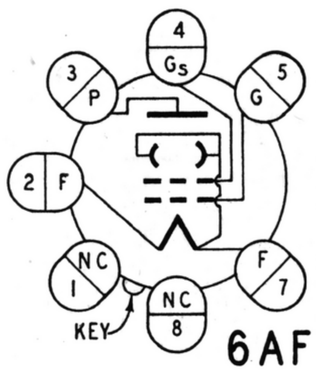

6AF

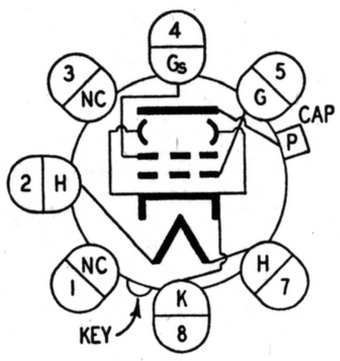

6AM

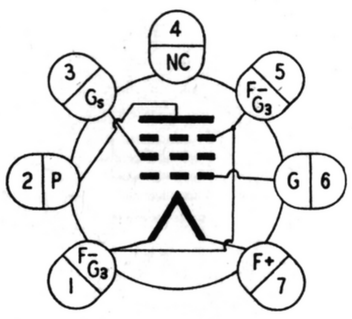

6AR

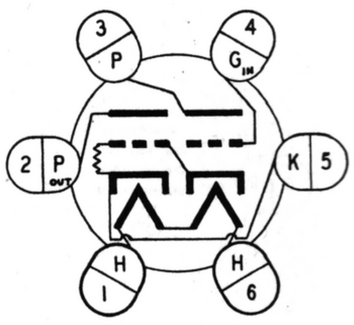

6AS

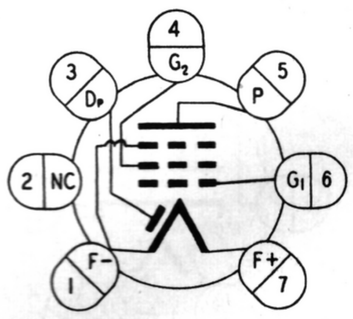

6AU

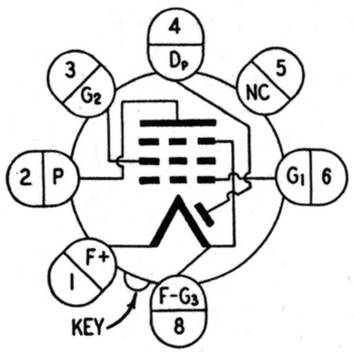

6AX

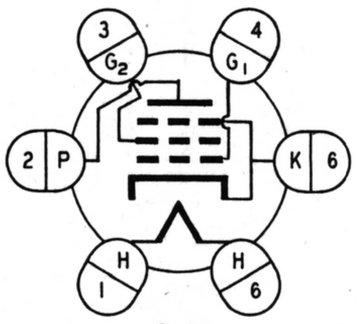

6B

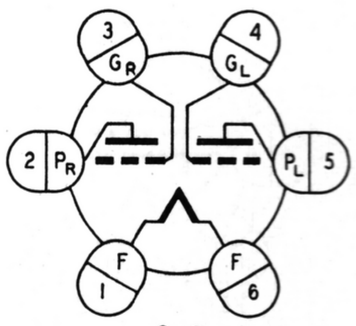

6C

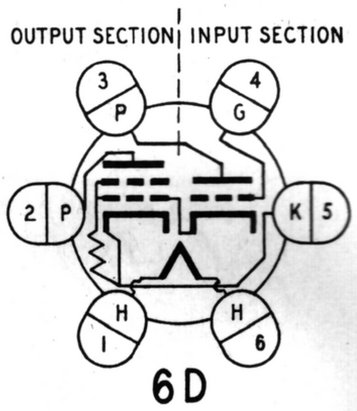

6D

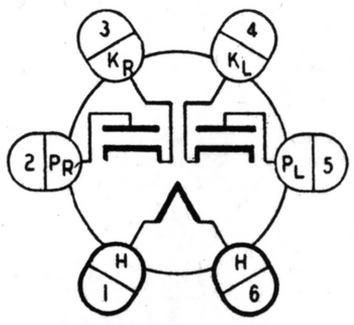

6E

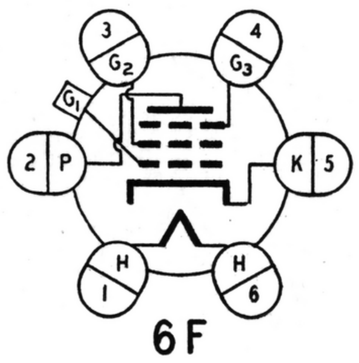

6F

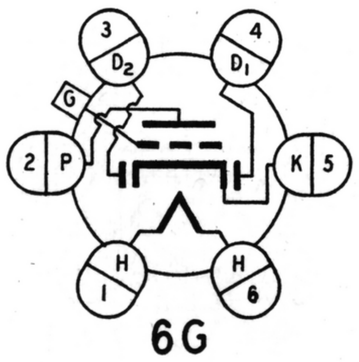

6G

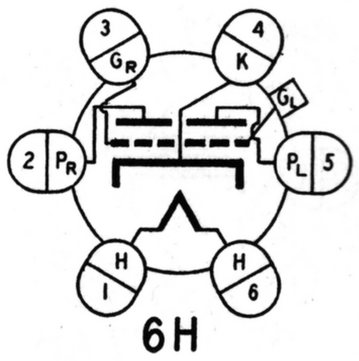

6H

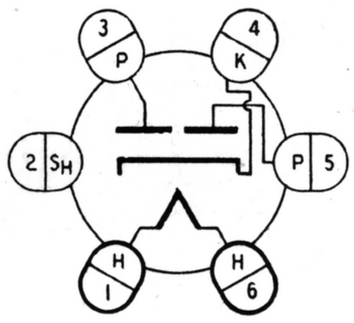

6J

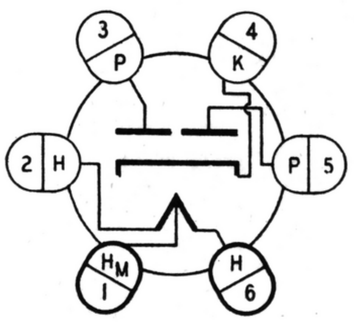

6K

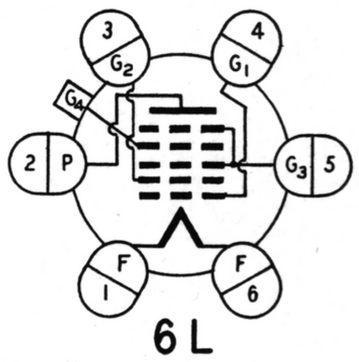

6L

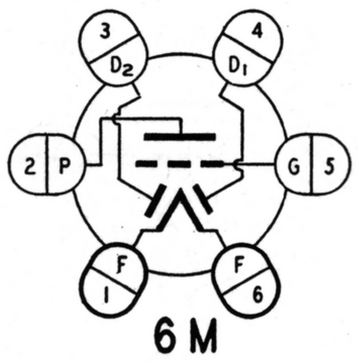

6M

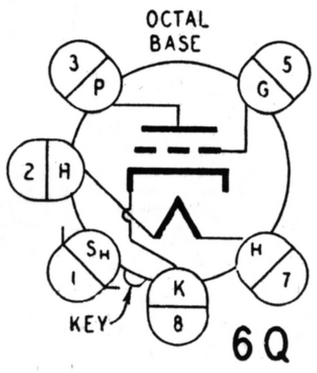

6Q

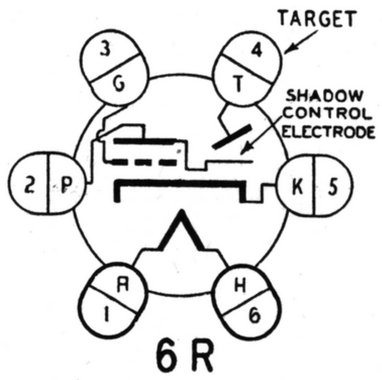

6R

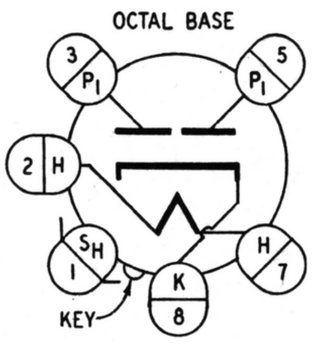

6S

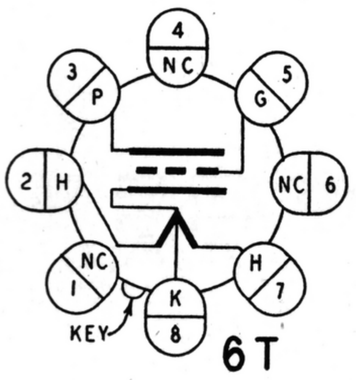

6T

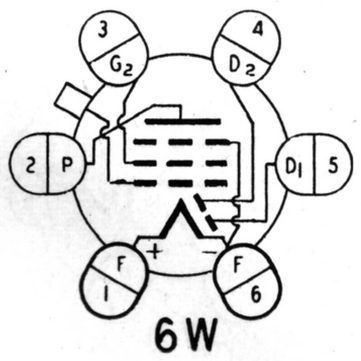

6W

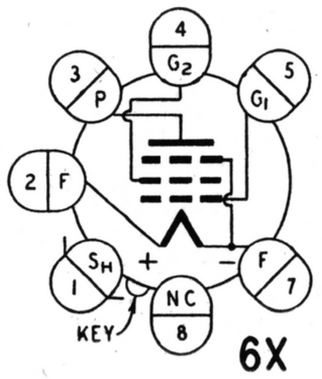

6X

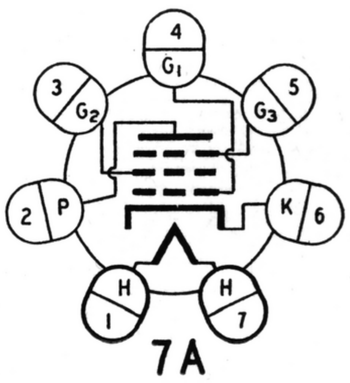

7A

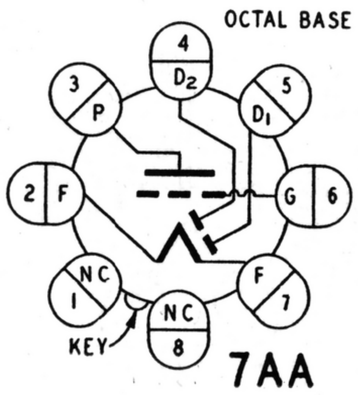

7AA

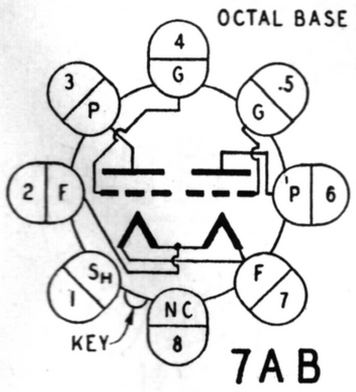

7AB

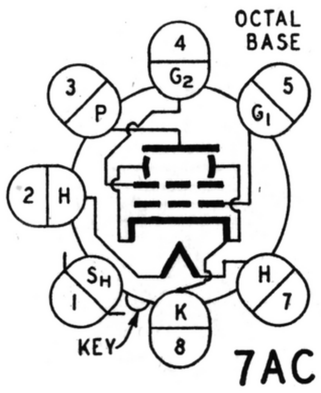

7AC

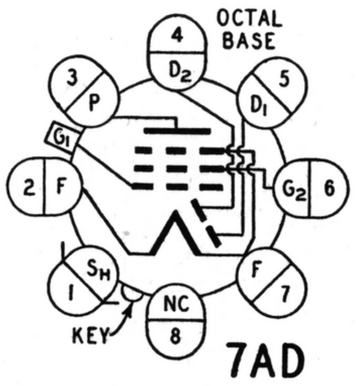

7AD

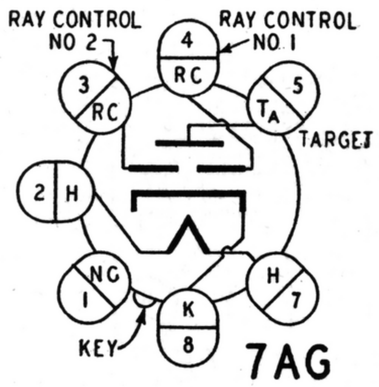

7AG

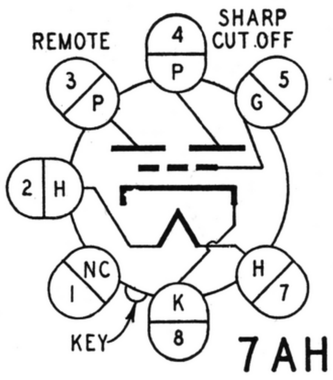

7AH

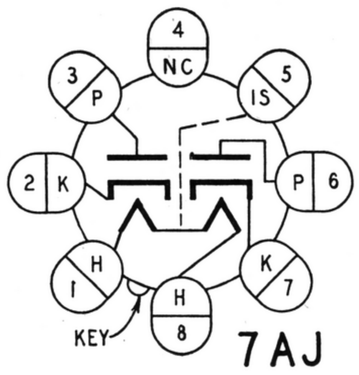

7AJ

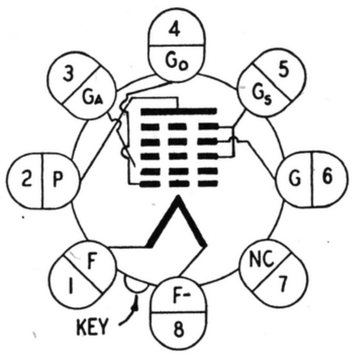

7AK

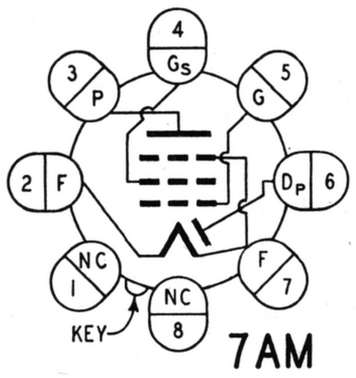

7AM

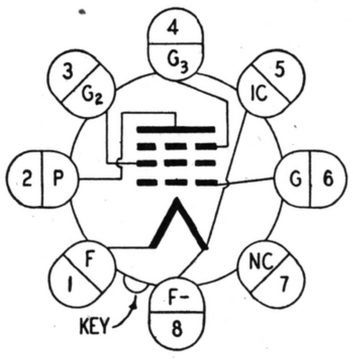

7AO

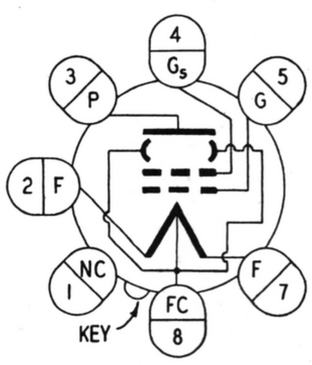

7AP

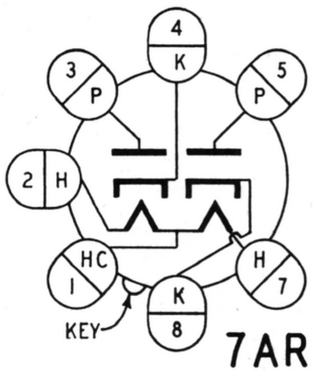

7AR

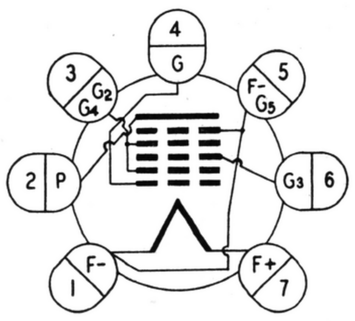

7AT

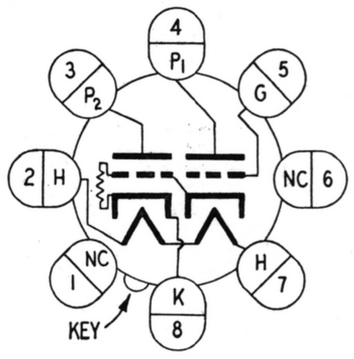

7AU

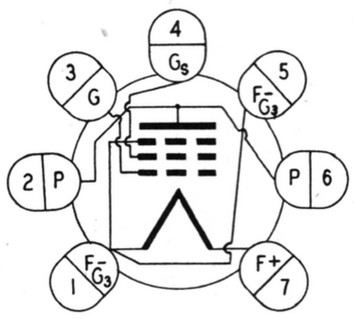

7AV

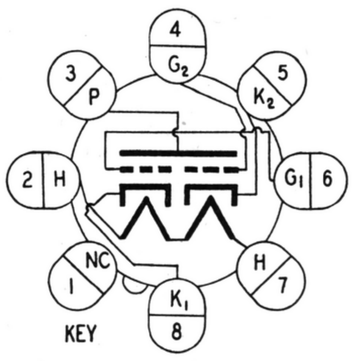

7AX

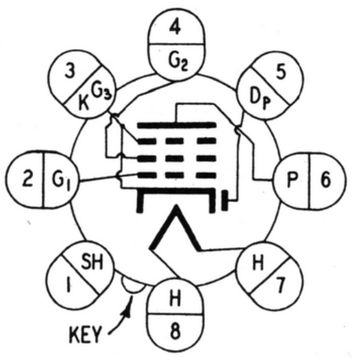

7AZ

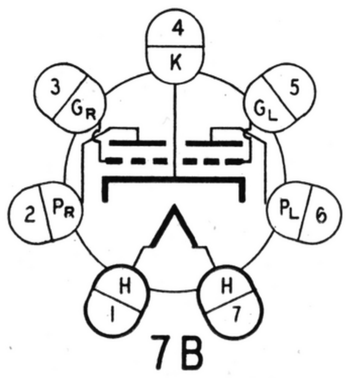

7B

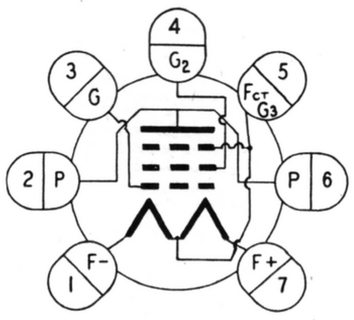

7BA

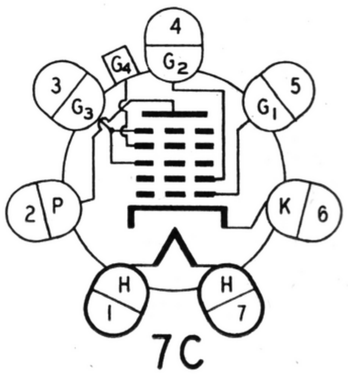

7C

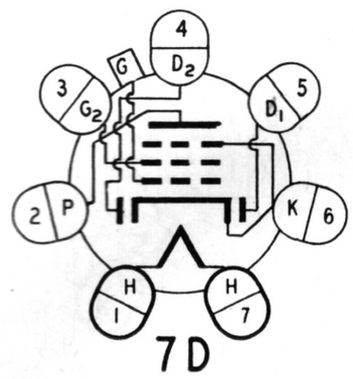

7D

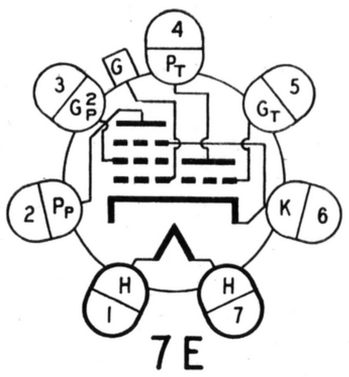

7E

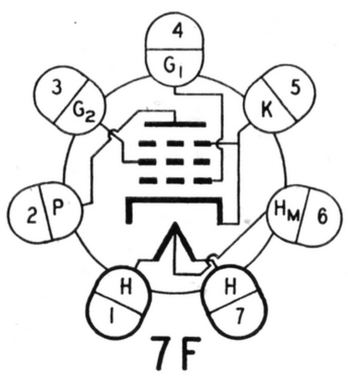

7F

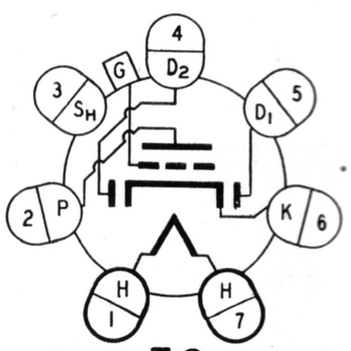

7G

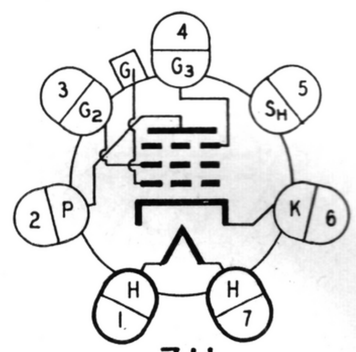

7H

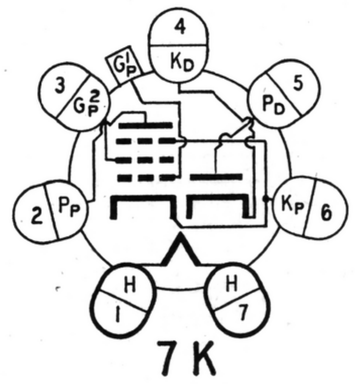

7K

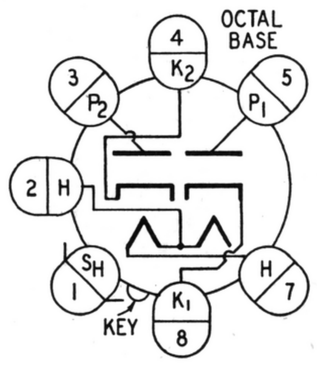

7Q

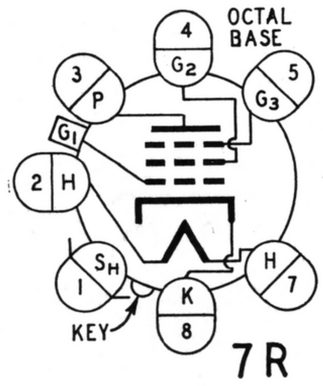

7R

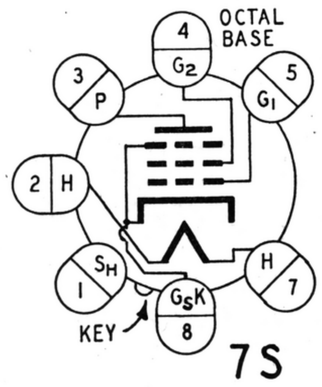

7S

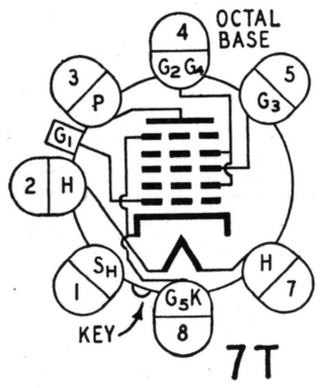

7T

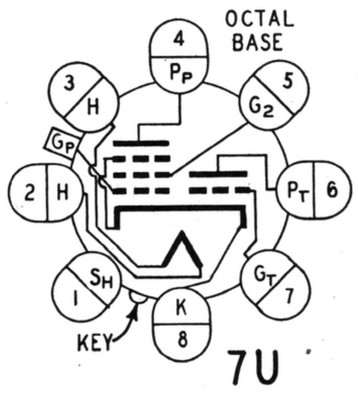

7U

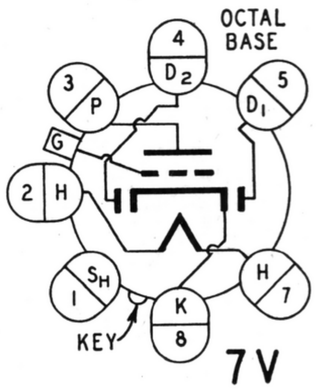

7V

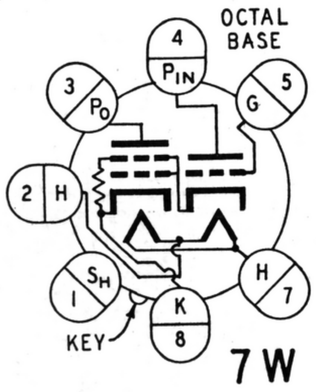

7W

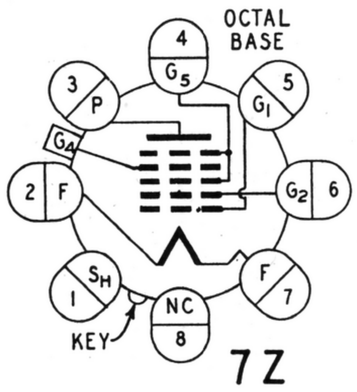

7Z

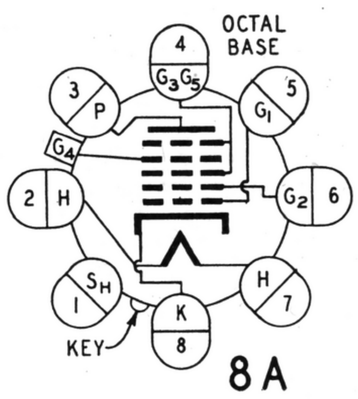

8A

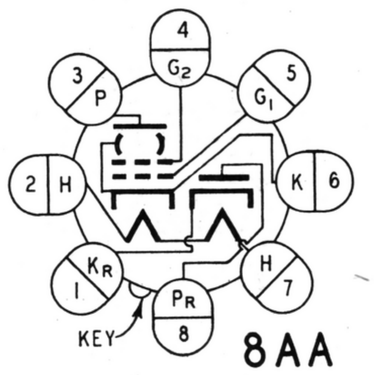

8AA

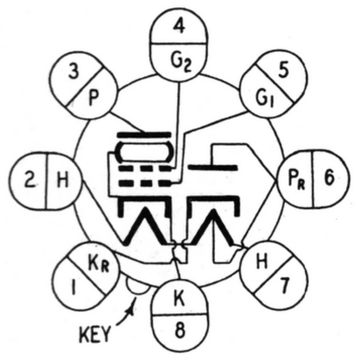

8AB

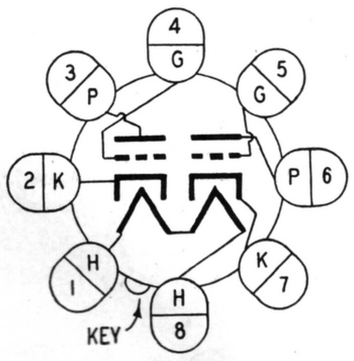

8AC

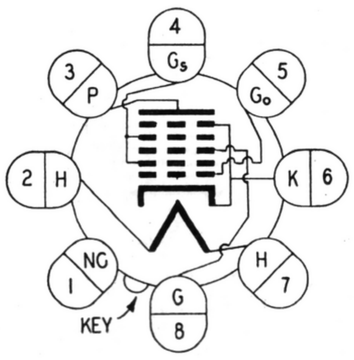

8AD

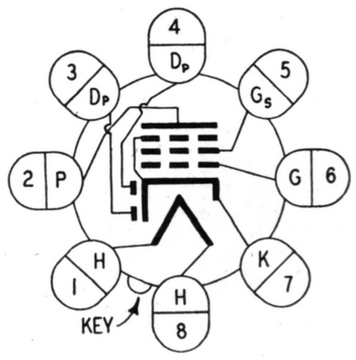

8AE

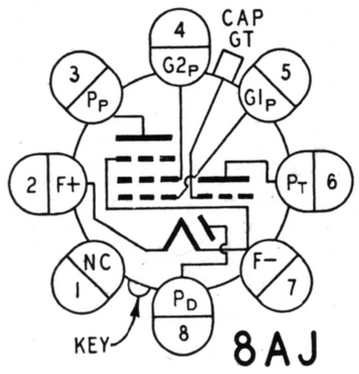

8AJ

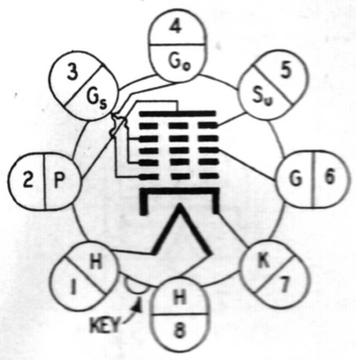

8AL

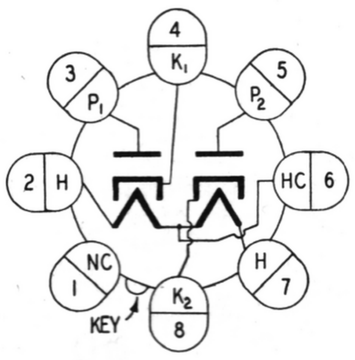

8AN

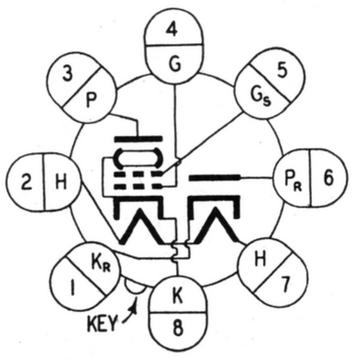

8AO

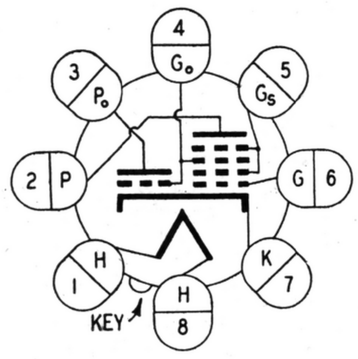

8AR

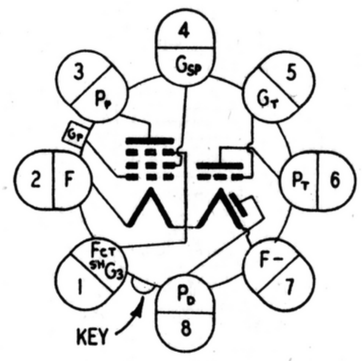

8AS

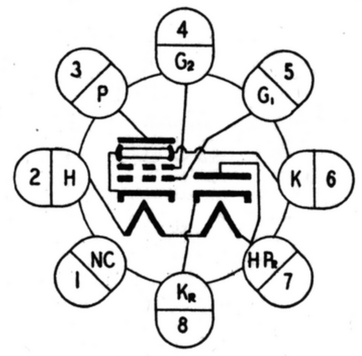

8AV

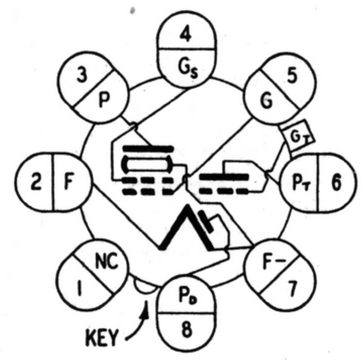

8AW

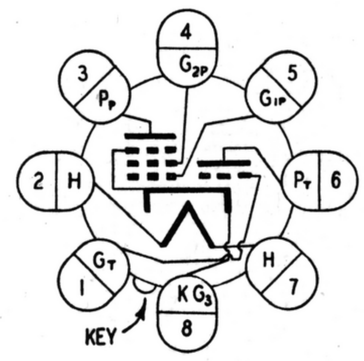

8AY

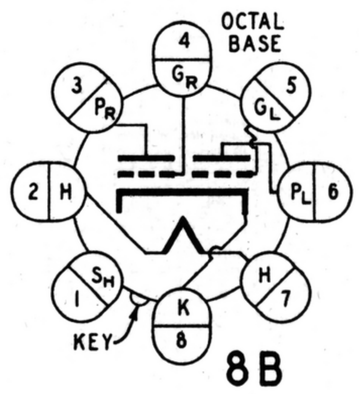

8B

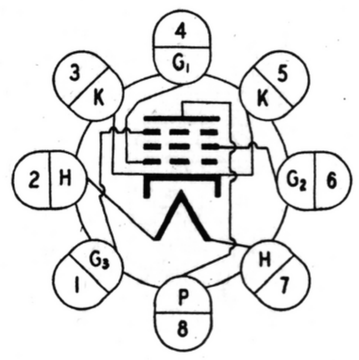

8BC

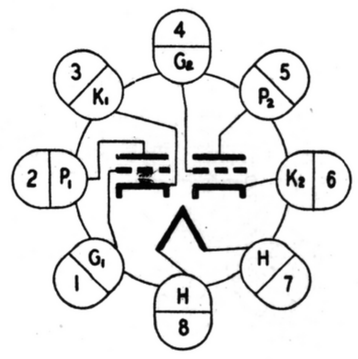

8BD

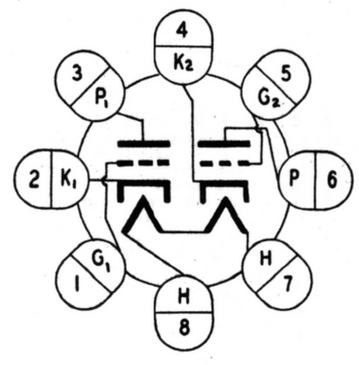

8BE

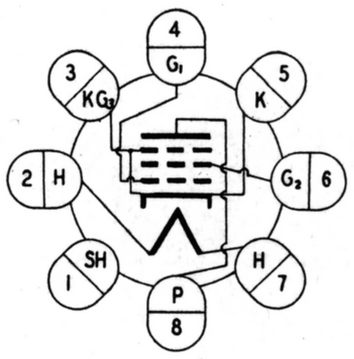

8BK

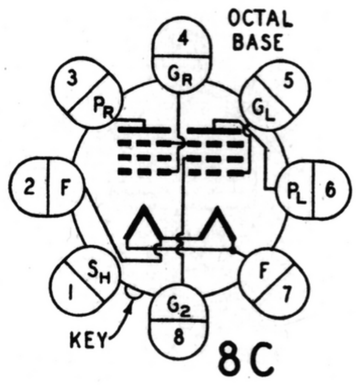

8C

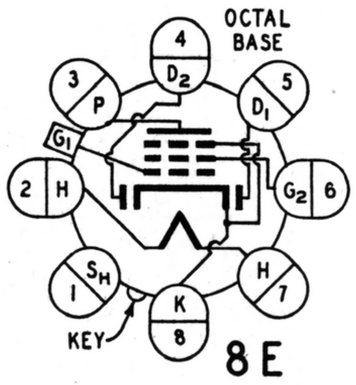

8E

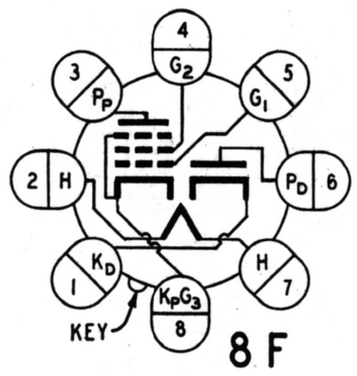

8F

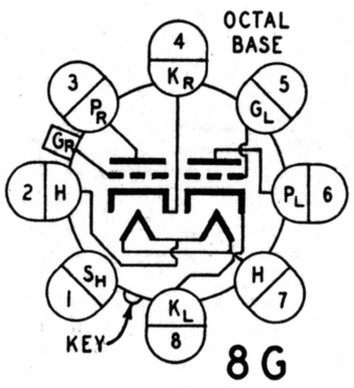

8G

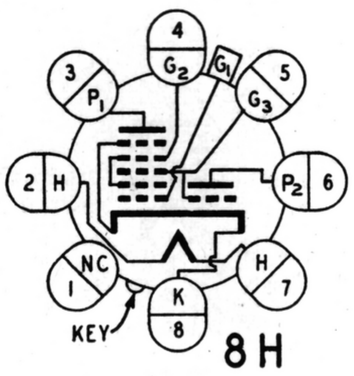

8H

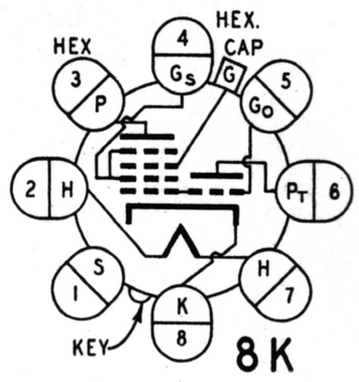

8K

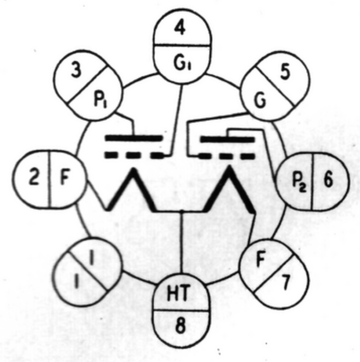

8L

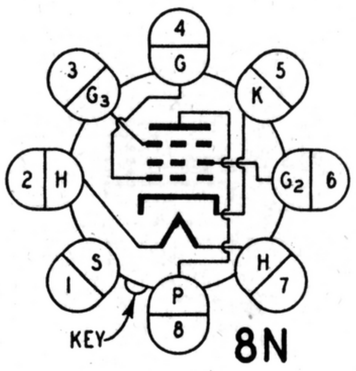

8N

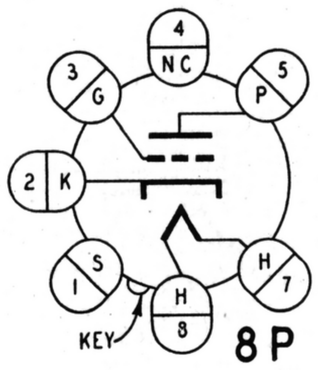

8P

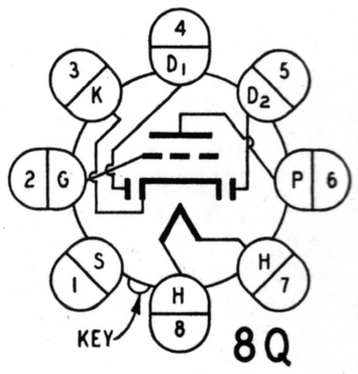

8Q

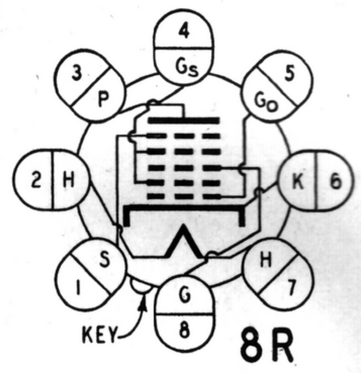

8R

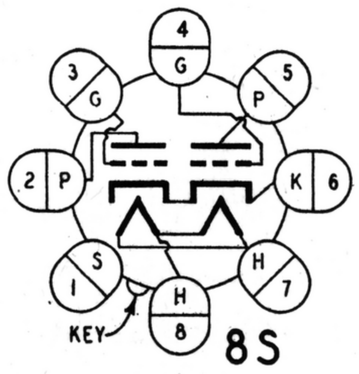

8S

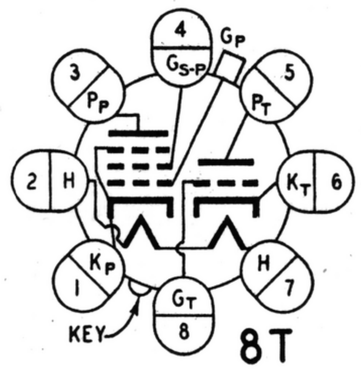

8T

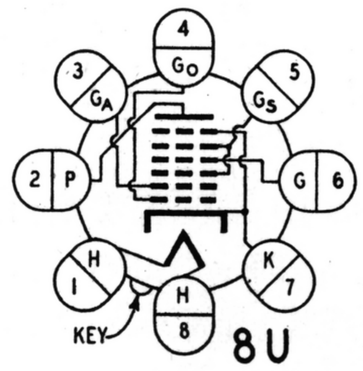

8U

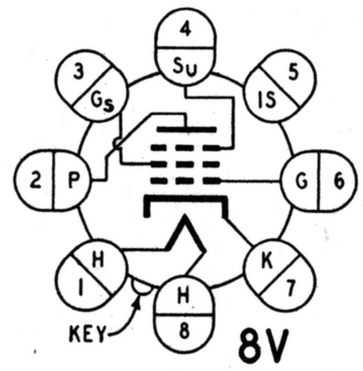

8V

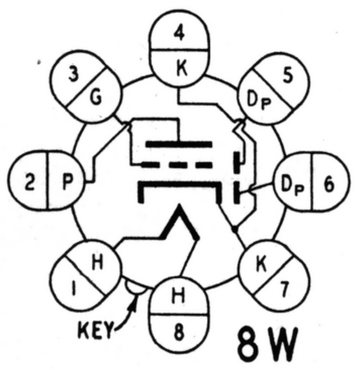

8W

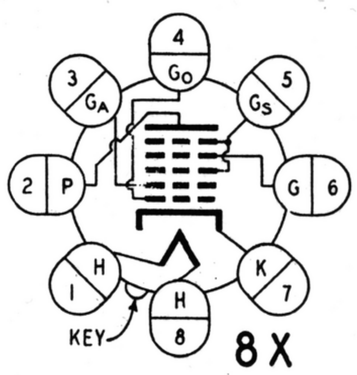

8X

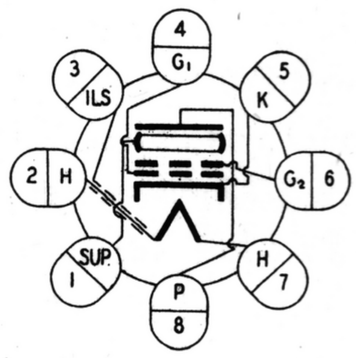

8Y

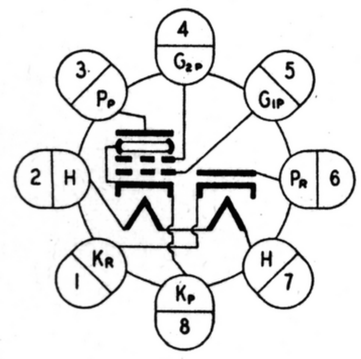

8Z

SPECIAL TUBES

Type No.	FILAMENT		BASING		CHARACTERISTICS
	Volts	Amps.	View	Shield Conn. to	USE AND DIMENSIONS
2S/4S	2.5	1.35	5D	Cathode Pin	Approximately 40 Ma. on each Diode Plate at 50 volts DC.: Duplex Diode Detector.
24S	2.5	1.75	5E	Cathode Pin	Same as 24A
27S	2.5	1.75	5A	Cathode Pin	Same as 27
35S/51S	2.5	1.75	5E	Cathode Pin	Same as 35
55S	2.5	1.0	6G	Cathode Pin	Same as 55
56S	2.5	1.0	5A	Cathode Pin	Same as 56
56AS	6.3	0.4	5A	Cathode Pin	Same as 76 except Heater Amps.
57S	2.5	1.0	6F	Cathode Pin	Same as 57
57AS	6.3	0.4	6F	Cathode Pin	Same as 6C6 except Heater Amps.
58S	2.5	1.0	6F	Cathode Pin	Same as 58
58AS	6.3	0.4	6F	Cathode Pin	Same as 6D6 except Heater Amps.
75S	6.3	0.3	6G	Cathode Pin	Same as 75
85AS	6.3	0.3	6G	Heater pin Adjacent to Cathode Pin	Similar to 85 except Amp. Factor = 20; Mutual Cond. = 1250; Plate Curr. = 4.5 Ma.; Pl. Volts = 250V; Gr. Bias = −9V.
182B/482B	5.0	1.25	4D	No Shield	Similar to 45 except Fil. Volts; Amp. Fact. = 5.0; Mutual Cond. = 1500; Plate Curr. = 18 Ma.; Pl. Volts = 250 V; Gr. Bias = −35V.
183/483	5.0	1.25	4D	No Shield	Similar to 45 except Fil. Volts; Amp. Fact. = 3.0; Mut. Cond. = 1500; Pl. Curr. = 20 Ma.; Pl. Volts = 250V; Gr. Bias = −58V.
485	3.0	1.25	5A	No Shield	Similar to 27 except Heater Volts; Amp. Fact. = 12.8; Mut. Cond. = 1300; Pl. Curr. = 5.2 Ma.; Pl. Volts = 180V; Gr. Bias = −10V.
950	2.0	0.12	5K	No Shield	Similar to 33 except Fil. Amps; Pl. Curr. = 7 Ma.; Power Output = 0.45 Watts; Pl. and Scr. Volts = 135V; Max. Cont. Gr. Bias = −16.5V.
2A7S	2.5	1.0	7C	Cathode Pin	Same as 2A7
2Z2 / **G84**	2.5	1.5	4B	No Shield	Half Wave Rectifier, Filament Type Cathode
6A7S	6.3	0.3	7C	Cathode Pin	Same as 6A7
6B7S	6.3	0.3	7D	Cathode Pin	Same as 6B7
6C7	6.3	0.3	7G	Separate Pin	Similar to 85AS
6D7	6.3	0.3	7H	Separate Pin	Similar to 6C6
6E7	6.3	0.3	7H	Separate Pin	Similar to 6D6
6F7S	6.3	0.3	7E	Cathode Pin	Same as 6F7
6Y5	6.3	0.8	6J	Separate Pin	Similar to 6Z4/84
6Z5	12.6	0.4	6K	No Shield	Similar to 6Z4/84
	6.3	0.8			

INDEX

A

Pages

Acoustic Loading Networks, Loudspeakers..... 9
Alignment, Frequency Modulation Receivers.... 210-212
Audio Amplifiers, Frequency Modulation..... 210
Audio Transformer, RMA Color Code..... 354
Autodyne, Detector-Oscillator..... 32-35
Automatic Tuning
  Audio Silencing During the Automatic Tuning Cycle 179-181
  Cam and Lever Mechanisms..... 147-149
  Condenser Tuned System..... 156
  Emerson Miracle Tuner..... 158
  Permeability Tuned System..... 156-158
  Ratchet Switch Mechanisms.....158, 159
  Rocker Bar Mechanism.....149, 150
  Mechanical Station Button or Indexing Adjustment 150-156
  Mechanically Operated Manual Types..... 147-156
  Motor Operated Types..... 159-161
  Reference Table by Make and Model..... 139-146
  Station Selecting Commutator Devices..... 181-183
  Station Selector Switches..... 165-172
  Transfer Devices and Circuits from Manual to Automatic Tuning 172-177
  Tuned Circuit Substitution Types..... 156-159
  Tuning Motors 162-165
  Zenith Permeability and Mica..... 159
Automobile Battery Ground Chart..... 363

B

Baffles, Loudspeaker 8
Ballast Tube Circuits..... 362
Battery Cable, RMA Color Code..... 356
Bias Resistor Calculation.....370, 371

C

Capacitor Application
  Action in A.C. Circuits..... 284
  Action of Chokes..... 280
  By-Pass Circuits 285
  Capacity of By-Pass Units..... 285
  Choke Input Filter..... 282
  Complex Filter Circuits.....283, 284
  Electrolytic By-Pass Units..... 285
  Filter Circuit Action..... 280-284
  Full Wave Rectifier.....279, 280

Pages

  Half Wave Rectifier.....278, 279
  Non-Polarized Units 284
  Multiple Choke Filter Circuits..... 283
  Resonant Element Filter Circuit.....281, 282
  Voltage Distribution in Filter Circuits.....282, 283
Charts
  Automobile Battery Ground..... 363
  Ballast Tube Circuits..... 362
  Inductance of Single Layer Coils..... 361
  Milliammeter Extension Range..... 350
  Reactance (LC) 356-359
  Receiving Tube Characteristics by Type Number 373-401
  Resistance Coupled Amplifier..... 365-368
  Transformer Design
    Core Loss Curves—Kilolines Per Square Inch vs. Watts Per Pound..... 352
    Core Loss vs. Frequency..... 352
    Flux Density—Core Area—Turns Per Volt.. 352
    Small Power Transformer, Core Area vs. Watts 352
  Voltmeter Multiplier 350
Color Code
  Mica Condenser 356
  Resistor 360
  RMA Audio Transformer 354
  RMA Battery Cable..... 356
  RMA Dynamic Speaker Wiring..... 355
  RMA IF Transformer 354
  RMA Power Transformer 354
Condensers
  Capacity of 254
  Dry Electrolytic General Theory..... 255
Conversion Table
  Electrical Factors 364
  Frequency to Wavelength..... 364
Converters, Superheterodyne (see Superheterodyne First Detector and Oscillators)
Copper Wire Table..... 353
Coupling
  Superheterodyne First Detector and Oscillator 29-37
Coupling Transformers, Loudspeaker..... 15
Crystal Pickup
  Equalization 99, 100
  Installation 94-100
  Representative Connection 95, 96
  Terminal Impedance 94, 95

D

Pages

D.C. Dry Electrolytic Capacitors 254-308
- Cross Reference by Type Number 290-301
- Replacement Chart by Minimum Line 302-308

Detector, Superheterodyne First 23
Discriminators, Frequency Modulation 208-210
Dry Electrolytic Capacitors
- Electrical Characteristics
  - Capacity 262
  - Corrosion 271
  - D.C. Working Voltage 262
  - Equivalent Series Resistance 267
  - Gas Pressure 271
  - High Frequency Impedance 267, 268
  - Humidity 271
  - Leakage Current 266
  - Normal Life 271-275
  - Peak Ripple Voltage 262
  - Peak Voltage 262
  - Power Factor 266
  - Scintillating Voltage 263, 264
  - Shelf Life 275
  - Surge Voltage 263
  - Temperature 268-271
- External Construction
  - Cardboard Cartons and Tubes 259, 260
  - Type FP 260, 261
  - Round Metal Cans 260
- Internal Construction
  - Anode Electrode 256
  - Cathode Foil 256
  - Common Anode Concentrically Wound (CACW) 257, 258
  - Common Cathode Concentrically Wound (CCCW) 257
  - Connections 256, 257
  - Proportion of Section 257
  - Separate Section Units 258
  - Separators 257
- Non-Polarized 265
- Polarity 265
- Semi-Polarized 265, 266
- Test Section 275-277
- Wartime Servicing 286-308

Dynamic Speaker Wiring, RMA Color Code 355

E

Pages

Electrolytic Condensers, General 254

F

Field Coils, Loudspeaker 8
Formula
- A.C. Voltage and Power 364
- Capacity of Parallel Plates 363
- Decibel 364
- Dissipation Factor Q 363
- Equivalent Impedance of a Parallel Circuit 363
- Equivalent Impedance of a Series Circuit 363
- Frequency 363
- Impedance of a Circuit 363
- Ohm's Law 363
- Power Factor of a Condenser 363
- Power Output 364
- Reactance (Capacitive) of a Condenser 363
- Reactance (Inductive) of a Coil 363
- Resistances in Parallel 363
- Transformer Ratio 364

Frequency Characteristics, Loudspeakers 13, 14, 19
Frequency Modulation
- Audio Amplifiers 210
- Discriminators 208-210
- General Theory 200-202
- Limiters 207, 208
- Receiver Alignment 210-212
- Receiver Design 204-214
- Transmitters 202-204

Full Wave Voltage Doublers, Description 53

G

Greek Alphabet, Designations 364

H

Half Wave Rectifier
- Characteristics 49
- Peak Ripple Current Through the Rectifier 51
- Peak Ripple Voltage Across Input Filter Condenser 52
- RMS Ripple Current in the Initial Filter Condenser 50

Heterodyne, Between Stations 26
Home Recorder, Description and Service Instructions 105-108

I

Pages

IF Transformer, RMA Color Code 354
Image, Superheterodyne 24
Impedance Matching, Loudspeakers 14
Inductance of Single Layer Coils 361

L

Limiters, Frequency Modulation 207, 208
Loudspeakers
- Acoustic Loading Networks 9
- Applications 17
- Audio-Frequency Transformers 15
- Audio-Frequency Transmission Lines 15, 16
- Baffles 9
- Cabinets 9
- Design and Application 8-20
- Field Coils 8
- Frequency Characteristics 13, 14, 19
- General Description 8
- Horn Types 11
- Impedance Matching 14
- P. A. Systems 17
- Permanent Magnets 8
- Phasing 16
- Physical Characteristics 8
- Power-Handling Capacity 12
- Replacements 17

M

Mica Condenser Color Code 356
Milliammeter Shunts, Calculation of 348-350
Mutual Conductance, Definition 371

O

Ohm's Law, Application in Power Supply Systems 346-348
Oscillator, Grid Leak and Condenser Operation .. 28, 39
Oscillator Circuit
- Colpitts 27, 28
- Hartley 27

Oscillator Systems, Superheterodyne 27, 28

P

Permanent Magnets, Loudspeaker 8

Pages

Phasing, Loudspeaker 16
Phono. Radio, Typical Switching Circuits 96-99
Power Supplies, Transformerless, Component Failures 61, 62
Power Transformer
- Design 351-353
- Rebuilding 351-353
- RMA Color Coding 354

Practical Radio Noise Suppression 310-323

R

Radio Noise Suppression
- Appliance Noise 312-321
- Barber Shop Equipment 318
- Belt Static 321
- Cash Registers 318
- Commutating Devices 312, 313
- Dental Equipment 319
- Diathermy Machines 319
- Drink Mixers 313, 314
- Electric Drills and Sanders 314
- Electric Refrigerators 318
- Electric Shavers 318
- Elimination of Line Noise at the Receiver 311
- Fluorescent Lights 316
- Home Food Mixers 314
- Hospital X-Ray Machines 319, 320
- Large Motors and Generators 314, 315
- Lead-in Noise 311, 312
- Multiple Circuit Advertising Signs 318
- Neon Signs 315, 316
- Oil Burners 320
- Sewing Machines 318
- Sources of Interference 310
- Spark Plug Testers 320
- Street Cars 321
- Telephone Equipment 320, 321
- Thermostat Controlled Devices 320
- Tracing Outside Interference 310
- Traffic Signs 317
- Transmission Line Noise 310, 311
- Vacuum Cleaners 313
- Violet Ray Machines 318, 319

Pages

Washing Machines 315
Radio Noise Suppression Equipment—Representative Types 321-323
Reactance (LC) Charts 356-359
Reactance Control, Frequency Modulation 202-204
Receiving Tube Characteristics 370-401
  Bias Resistor Calculation 370, 371
  Chart by Type Number 373-401
  Definition of Terms 371, 372
  Mutual Conductance 371
  New Developments 370
Record Changers, Service Data
  Capehart 16-E 109-119
  Farnsworth S30 120-123
  Garrard 121
  Magnavox G1, RC5, RC8, RC10, RC11, RC50, RC51 124-130
  RCA RP139A, RP145, V109 131-133
  Webster-Chicago 11, W1270 134-136
Record Players, Wireless Type 100-104
Resistance Coupled Amplifier Charts 365-368
Resistivity Table of Popular Metals 350
Resistor Color Code 360
Resistors, Parallel Calculation of 347, 348
Ripple Current, Half Wave Rectifier 50-52
Ripple Voltage, Half Wave Rectifier 51

S

Scanning Systems, Television 219, 220
Signal Tracing, Procedure 337-339
Superheterodyne
  Adjustment of the Oscillator Circuit 38
  Autodyne First Detector Combinations 32
  Basic Oscillator Circuits 27
  Circuit Constant Considerations 39, 40
  Colpitts Oscillator 27
  Control-Grid Types of Autodyne Detectors 33
  Converter Circuit, Silver-Marshall Model R 45
  Coupling—First Detector and Oscillator 29-37
  Definition 22
  Diode Converter 46
  Direct Interference at IF Frequencies 26

Pages

  Electron Coupling with Suppressor Grid Injection 30
  Harmonics Beating Harmonics 26
  Hartley Oscillator 27
  First Detector-Oscillator Operation 23
  Grid Leak and Condenser 28, 39
  Images 24
  Lecault "Ultradyne" 45
  Miscellaneous Circuits 45
  Oscillator Anode Resistor 40
  Oscillator Coil Coupling 36
  Oscillator Harmonics 25
  Oscillator Performance 27
  Pentagrid Converters 35
  Philco Converter 46
  Single-Ended Converters 37
  Spurious Responses 24
  Suppressor Grid Type of Autodyne Detector 34
  Typical Circuits 40
  Use of 6J8G Converter Tube 32
  Use of 6L7 Mixer Tube 31
  Use of 6SA7-12SA7 Converter Tube 37

T

Table, Field Coil Excitation Ratings 9
Television
  Aperture Distortion 219, 220
  Cathode Ray Tube
    Description of 228-234
    Electromagnetic Deflection 231-234
    Electron Beam Deflection Methods 231-234
    Electrostatic Deflection 231, 233
    Luminescence 229, 230
  Foreign Developments 245-249
  Frequency Band Width Determination 221
  History of Cathode-Ray Tube 227
  Necessity for Wide Frequency Bands 220-222
  Projection Cathode-Ray Tubes 230
  Promising Developments 250-252
  Proposed Standards 222, 223
  Pulse Generation 237
  Pulse Separation 236, 237

Pages

Receiving Antenna 241
Receiving Systems 237-241
RMA Standard Signal 235, 236
Scanning Systems 219, 220
Standards of Transmission 222
Synchronization 234-237
The Cathode-Ray Tube as a Television Reproducer 227-234
Television Cameras, Analysis of 223-226
Television System, Essential Elements 217-220
Television Transmission 241-244
Band Width 241
Distortion Requirements 242, 243
Interconnecting Links 244
Modulation System 242
Television Transmitting Antenna 243, 244
Transmission Lines, Loudspeaker 15, 16
Transmitters, Frequency Modulation 202-204

U

Useful Servicing Information
Application of Ohm's Law in Power Supply Systems 346-348
Methods for Calculating Parallel Resistor Values 347, 348
Methods for Calculating Voltmeter Multipliers and Milliammeter Shunts 348-350
Power Transformer Designing and Rebuilding 351-353

V

Vacuum Tubes, Definition of Terms 371, 372
Vacuum Tube Voltmeters 326-344
Amplifier Circuit 329
Checking Distortion with 339, 340
Clough Brengle 88A 327, 328
General Radio 726-A 328-331
Hickok 110 ..... 331, 332
Meissner Analyst 333
Operation at High Frequencies 330
Peak Voltage Measurements 328
Power Absorption 329, 330
RCA-Rider Chanalyst 333, 334
RCA-Rider Volt Ohmyst 334

Pages

Rectifier Circuit 328, 329
Slide Back Type 326
Special Signal-Tracing Equipment 335-337
Theory of RMS Measurements 327, 328
Triplett 1252 ..... 326, 327
Use in Special Control Circuits 340-344
Vibrator
Application Considerations 69
Buffer Condenser 71
Characteristics 70
Dual Reed Type 66
Eight Contact Type 67
Full Wave Interrupter Type 67
Full Wave Synchronous or Self-Rectifying Type 66
General Theory 64
Half Wave Interrupter 65
Past and Present Designs 65-69
Split Reed Type 69
Transformer 70
Tuned Reed Type 69
Vibrator Powered Equipment Service Information 74-76
Vibrator Power Supplies
Bias Supply Systems 88
Chassis Construction 80
Design 78
Filtering of Leads 86
Fusing 80
Operation on A.C. Lines 80
Paralleled Operation 78
RF Interference Suppression 83
Selection of Ground Connection 85
Shielding and Ventilating 77, 84
Special Applications 81
Voltage Addition Systems 60
Voltage Dividers, Calculation of 347
Voltage Doubler
Common Line or Series Line Feed 56-58
Full Wave, Symmetrical 53-56
Series Line Feed or Half Wave with Common Cathode Condenser 59
Voltage Multiplier System 59, 60
Voltmeter Multipliers, Calculation of 348-350